Introduction

Congratulations! Your selection of a 2010 Honda Accord was a wise investment. It will give you years of driving pleasure.

One of the best ways to enhance the enjoyment of your new vehicle is to read this manual. In it, you will learn how to operate its driving controls and convenience items. Afterwards, keep this owner's manual in your vehicle so you can refer to it at any time.

Several warranties protect your new vehicle. Read the warranty booklet thoroughly so you understand the coverages and are aware of your rights and responsibilities.

Maintaining your vehicle according to the maintenance minder shown in the instrument panel helps to keep your driving trouble-free while it preserves your investment. When your vehicle needs maintenance, keep in mind that your dealer's staff is specially trained in servicing the many systems unique to your vehicle. Your dealer is dedicated to your satisfaction and will be pleased to answer any questions and concerns.

As you read this manual, you will find information that is preceded by a NOTICE symbol. This information is intended to help you avoid damage to your vehicle, other property, or the environment.

California Proposition 65 Warning

WARNING: This product contains or emits chemicals known to the State of California to cause cancer and birth defects or other reproductive harm.

Event Data Recorders
This vehicle is equipped with one or more devices commonly referred to as event data recorders. These devices record front seat belt use, front passenger seat occupancy, airbag deployment data, and the failure of any airbag system component. This data belongs to the vehicle owner and may not be accessed by anyone else except as legally required or with the permission of the vehicle owner.

Service Diagnostic Recorders
This vehicle is equipped with service-related devices that record information about powertrain performance. The data can be used to verify emissions law requirements and/or help technicians diagnose and solve service problems. It may also be combined with data from other sources for research purposes, but it remains confidential.

A Few Words About Safety

Your safety, and the safety of others, is very important. And operating this vehicle safely is an important responsibility.

To help you make informed decisions about safety, we have provided operating procedures and other information on labels and in this manual. This information alerts you to potential hazards that could hurt you or others.

Of course, it is not practical or possible to warn you about all the hazards associated with operating or maintaining your vehicle. You must use your own good judgement.

You will find this important safety information in a variety of forms, including:

- **Safety Labels** — on the vehicle.
- **Safety Messages** — preceded by a safety alert symbol ⚠ and one of three signal words: **DANGER**, **WARNING**, or **CAUTION**. These signal words mean:

⚠ DANGER	You WILL be KILLED or SERIOUSLY HURT if you don't follow instructions.
⚠ WARNING	You CAN be KILLED or SERIOUSLY HURT if you don't follow instructions.
⚠ CAUTION	You CAN be HURT if you don't follow instructions.

- **Safety Headings** — such as Important Safety Reminders or Important Safety Precautions.
- **Safety Section** — such as Driver and Passenger Safety.
- **Instructions** — how to use this vehicle correctly and safely.

This entire book is filled with important safety information — please read it carefully.

Contents

Owner's Identification Form

Your Vehicle at a Glance (main controls) 3

Driver and Passenger Safety (seat belts, SRS, and child protection) 5

Instruments and Controls (indicators, gauges, dashboard, and steering column) 53

Features (climate control, audio, steering wheel, security, cruise control, HomeLink®, and other convenience items) 121

Before Driving (fuel, vehicle break-in, and cargo loading) 241

Driving (engine and transmission operation) 261

Maintenance (minder, fluid checking, minor services, and vehicle storage) 289

Taking Care of the Unexpected (flat tire, jump starting, overheating, and fuses) 341

Technical Information (vehicle specifications, tires, and emissions controls) 367

Warranty and Customer Relations (U.S. and Canada only) (warranty and contact information) 385

Authorized Manuals (U.S. only) (how to order) 389

Index I

Service Information Summary (fluid capacities and tire pressures)

00X31-TE0-6200
© 2009 American Honda Motor Co., Inc. - All Rights Reserved

Overview of Contents

Contents
A convenient reference to the sections in this manual.

Your Vehicle at a Glance
A quick reference to the main controls in your vehicle.

Driver and Passenger Safety
Important information about the proper use and care of your vehicle's seat belts, an overview of the supplemental restraint system, and valuable information on how to protect children with child restraints.

Instruments and Controls
Explains the purpose of each instrument panel indicator and gauge, and how to use the controls on the dashboard and steering column.

Features
How to operate the climate control system, the audio system, and other convenience features.

Before Driving
What gasoline to use, how to break-in your new vehicle, and how to load luggage and other cargo.

Driving
The proper way to start the engine, shift the transmission, and park; plus what you need to know if you're planning to tow a trailer.

Maintenance
The maintenance minder shows you when you need to take your vehicle to the dealer for maintenance service. There is also a list of things to check and instructions on how to check them.

Taking Care of the Unexpected
This section covers several problems motorists sometimes experience, and details how to handle them.

Technical Information
ID numbers, dimensions, capacities, and technical information.

Warranty and Customer Relations (U.S. and Canada only)
A summary of the warranties covering your new vehicle, and how to contact us for any reason. Refer to your warranty manual for detailed information.

Authorized Manuals (U.S. only)
How to order manuals and other technical literature.

Index

Service Information Summary
A summary of the information you need when you pull up to the fuel pump.

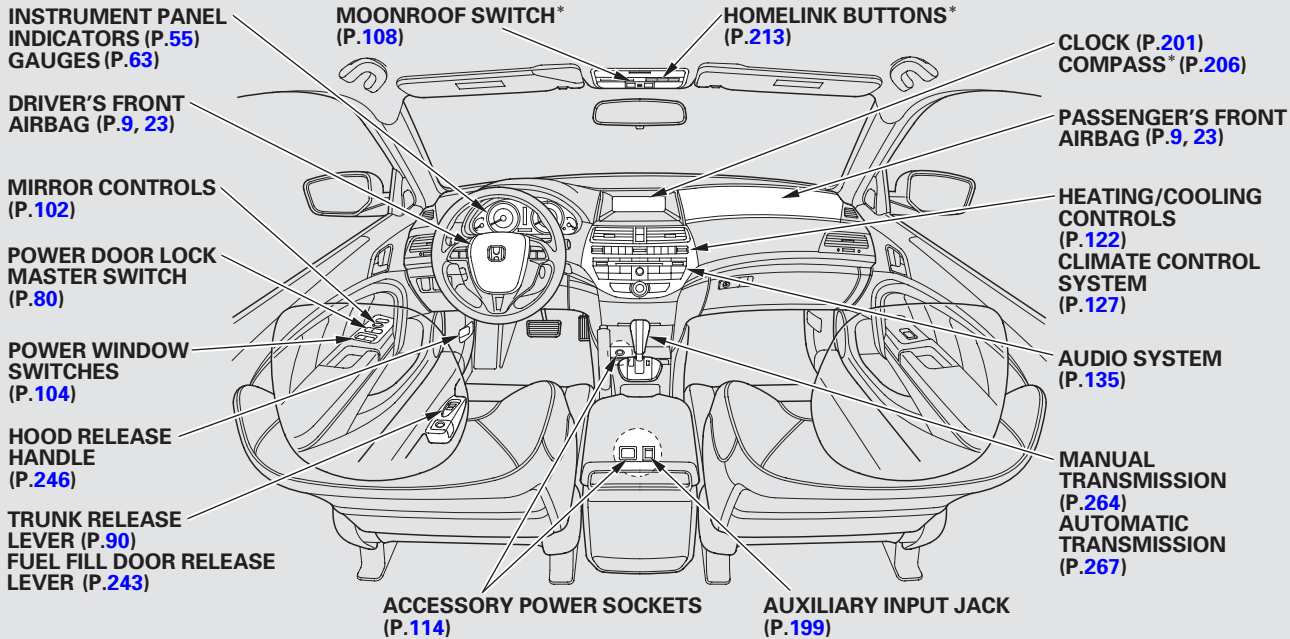

U.S. EX-L V6 model without navigation system is shown.

*: If equipped

Your Vehicle at a Glance

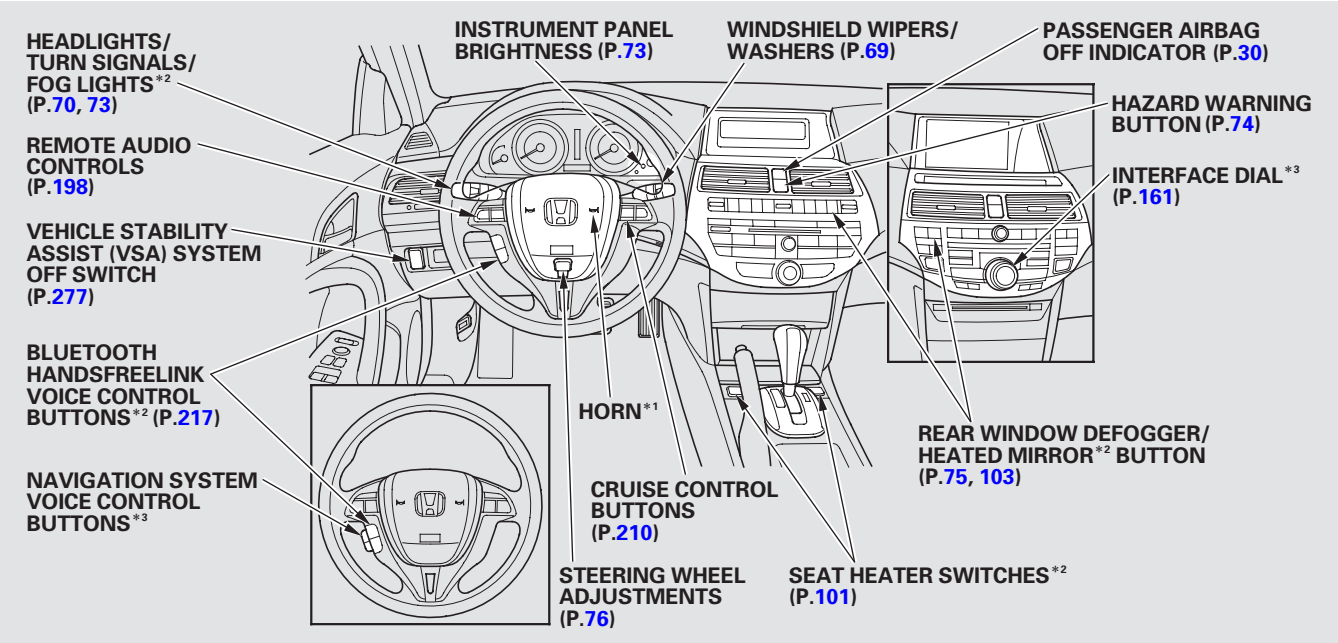

*1 : To use the horn, press the center pad of the steering wheel.
*2 : If equipped
*3 : Only on vehicles equipped with navigation system. Refer to the navigation system manual.

Driver and Passenger Safety

This section gives you important information about how to protect yourself and your passengers. It shows you how to use seat belts. It explains how your airbags work. And it tells you how to properly restrain infants and children in your vehicle.

Important Safety Precautions 6
Your Vehicle's Safety Features..... 7
Protecting Adults and Teens..... 11
1. Close and Lock the Doors..... 11
2. Adjust the Front Seats 11
3. Adjust the Seat-Backs 12
4. Adjust the Head Restraints 13
5. Fasten and Position the Seat Belts..... 14
6. Maintain a Proper Sitting Position 15
Advice for Pregnant Women..... 15
Additional Safety Precautions.... 16
Additional Information About Your Seat Belts 17
Seat Belt System Components... 17
Lap/Shoulder Belt..... 18
Automatic Seat Belt Tensioners..... 19
Seat Belt Maintenance 19
Additional Information About Your Airbags 21
Airbag System Components..... 21
How Your Front Airbags Work..... 23
How Your Side Airbags Work.... 27
How Your Side Curtain Airbags Work..... 28
How the SRS Indicator Works... 29
How the Side Airbag Off Indicator Works..... 30
How the Passenger Airbag Off Indicator Works..... 30
Airbag Service..... 31
Additional Safety Precautions.... 32
Protecting Children — General Guidelines..... 33
All Children Must Be Restrained 33
All Children Should Sit in a Back Seat 34
The Passenger's Front Airbag Can Pose Serious Risks 34
If You Must Drive with Several Children 36
If a Child Requires Close Attention 36
Additional Safety Precautions.... 37
Protecting Infants and Small Children 38
Protecting Infants..... 38
Protecting Small Children 39
Selecting a Child Seat..... 40
Installing a Child Seat 41
With LATCH..... 42
With a Lap/Shoulder Belt 44
With a Tether..... 46
Protecting Larger Children 47
Checking Seat Belt Fit 47
Using a Booster Seat..... 48
When Can a Larger Child Sit in Front 49
Additional Safety Precautions.... 50
Carbon Monoxide Hazard 51
Safety Labels..... 52

Important Safety Precautions

You'll find many safety recommendations throughout this section, and throughout this manual. The recommendations on this page are the ones we consider to be the most important.

Always Wear Your Seat Belt
A seat belt is your best protection in all types of collisions. Airbags are designed to supplement seat belts, not replace them. So even though your vehicle is equipped with airbags, make sure you and your passengers always wear your seat belts, and wear them properly (see page 14).

Restrain All Children
Children age 12 and under should ride properly restrained in a back seat, not the front seat. Infants and small children should be restrained in a child seat. Larger children should use a booster seat and a lap/shoulder belt until they can use the belt properly without a booster seat (see pages 33 – 50).

Be Aware of Airbag Hazards
While airbags can save lives, they can cause serious or fatal injuries to occupants who sit too close to them, or are not properly restrained. Infants, young children, and short adults are at the greatest risk. Be sure to follow all instructions and warnings in this manual.

Don't Drink and Drive
Alcohol and driving don't mix. Even one drink can reduce your ability to respond to changing conditions, and your reaction time gets worse with every additional drink. So don't drink and drive, and don't let your friends drink and drive, either.

Pay Appropriate Attention to the Task of Driving Safely
Engaging in mobile phone conversation or other activities that keep you from paying close attention to the road, other vehicles and pedestrians could lead to a crash. Remember, situations can change quickly, and only you can decide when it is safe to divert attention away from driving.

Control Your Speed
Excessive speed is a major factor in crash injuries and deaths. Generally, the higher the speed, the greater the risk, but serious injuries can also occur at lower speeds. Never drive faster than is safe for current conditions, regardless of the maximum speed posted.

Keep Your Vehicle in Safe Condition
Having a tire blowout or a mechanical failure can be extremely hazardous. To reduce the possibility of such problems, check your tire pressures and condition frequently, and perform all regularly scheduled maintenance (see page 291).

Your Vehicle's Safety Features

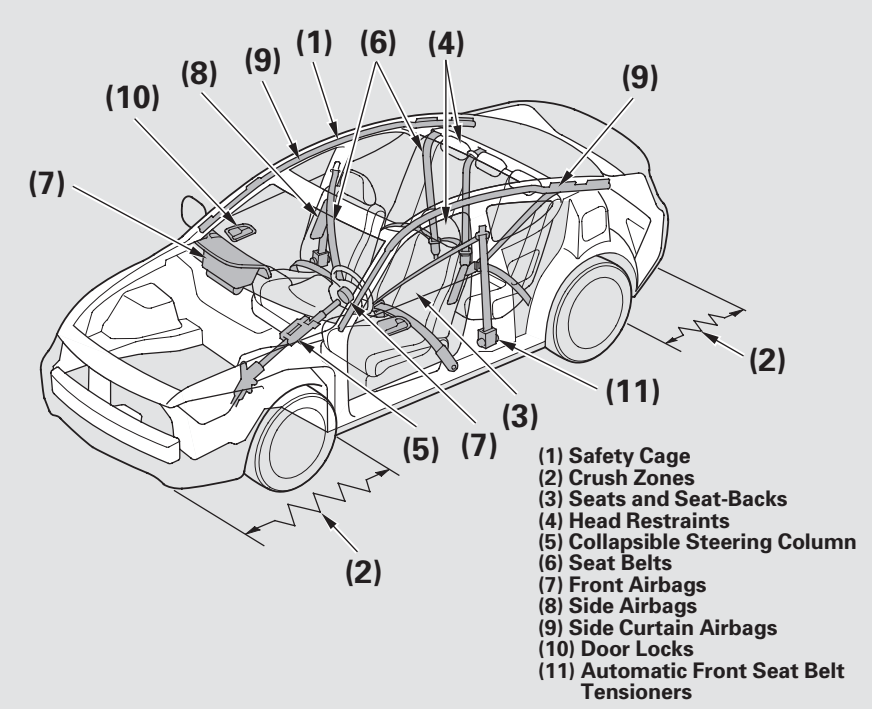

Your vehicle is equipped with many features that work together to protect you and your passengers during a crash.

Some features do not require any action on your part. These include a strong steel framework that forms a safety cage around the passenger compartment, front and rear crush zones, a collapsible steering column, and tensioners that tighten the front seat belts in a crash.

However, you and your passengers can't take full advantage of these features unless you remain sitting in the correct position and ***always wear your seat belts***. In fact, some safety features can contribute to injuries if they are not used properly.

The following pages explain how you can take an active role in protecting yourself and your passengers.

Seat Belts

Your vehicle is equipped with seat belts in all seating positions.

Your seat belt system also includes an indicator on the instrument panel and a beeper to remind you and your passengers to fasten your seat belts.

Why Wear Seat Belts

Seat belts are the single most effective safety device for adults and larger children. (Infants and smaller children must be properly restrained in child seats.)

Not wearing a seat belt properly increases the chance of serious injury or death in a crash, even though your vehicle has airbags.

In addition, most states and all Canadian provinces and territories require you to wear seat belts.

⚠ WARNING

Not wearing a seat belt properly increases the chance of serious injury or death in a crash, even though your vehicle has airbags.

Be sure you and your passengers always wear seat belts and wear them properly.

When properly worn, seat belts:

- Keep you connected to the vehicle so you can take advantage of the vehicle's built-in safety features.
- Help protect you in almost every type of crash, including:
  - frontal impacts
  - side impacts
  - rear impacts
  - rollovers
- Help keep you from being thrown against the inside of the vehicle and against other occupants.
- Keep you from being thrown out of the vehicle.
- Help keep you in a good position should the airbags ever deploy. A good position reduces the risk of injury from an inflating airbag and allows you to get the best advantage from the airbag.

Of course, seat belts cannot completely protect you in every crash. But in most cases, seat belts can reduce your risk of serious injury.

What You Should Do:

Always wear your seat belt, and make sure you wear it properly.

Airbags

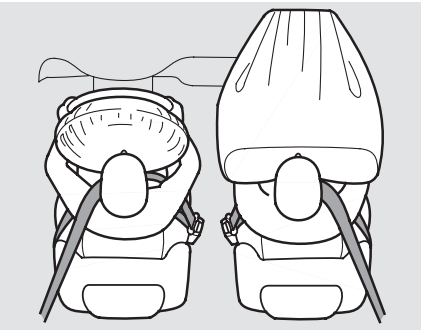

Your vehicle has a supplemental restraint system (SRS) with front airbags to help protect the heads and chests of the driver and a front seat passenger during a moderate to severe frontal collision (see page 23 for more information on how your front airbags work).

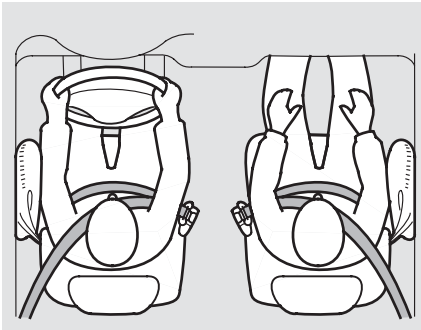

Your vehicle also has side airbags to help protect the upper torso of the driver or a front seat passenger during a moderate to severe side impact (see page 27 for more information on how your side airbags work).

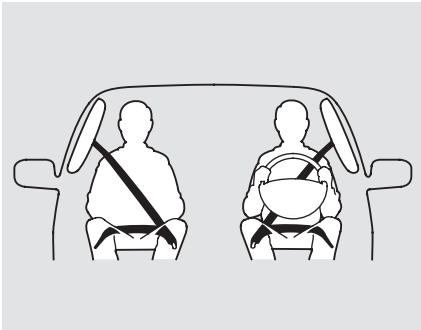

In addition, your vehicle has side curtain airbags to help protect the heads of the driver, front passenger, and passengers in the outer rear seating positions during a moderate to severe side impact (see page 28 for more information on how your side curtain airbags work).

CONTINUED

Your Vehicle's Safety Features

The most important things you need to know about your airbags are:

- ***Airbags do not replace seat belts.*** They are designed to supplement the seat belts.
- ***Airbags offer no protection in rear impacts, or minor frontal or side collisions.***
- ***Airbags can pose serious hazards.*** To do their job, airbags must inflate with tremendous force. So while airbags help save lives, they can cause minor injuries or more serious or even fatal injuries if occupants are not properly restrained or sitting properly.

What you should do: Always wear your seat belt properly, and sit upright and as far back from the steering wheel as possible while allowing full control of the vehicle. A front passenger should move their seat as far back from the dashboard as possible.

The rest of this section gives more detailed information about how you can maximize your safety.

Remember, however, that no safety system can prevent all injuries or deaths that can occur in a severe crash, even when seat belts are properly worn and the airbags deploy.

Introduction
The following pages provide instructions on how to properly protect the driver, adult passengers, and teenage children who are large enough and mature enough to drive or ride in the front.

See pages 33 — 50 for important guidelines on how to properly protect infants, small children, and larger children who ride in your vehicle.

1.Close and Lock the Doors
After everyone has entered the vehicle, be sure the doors are closed and locked.

Your vehicle has a door and trunk open indicator on the instrument panel to indicate when a specific door or the trunk is not tightly closed.

Locking the doors reduces the chance of someone being thrown out of the vehicle during a crash, and it helps prevent passengers from accidentally opening a door and falling out.

Locking the doors also helps prevent an outsider from unexpectedly opening a door when you come to a stop.

See page 80 for how to lock the doors, and page 61 for how the door and trunk open monitor system works.

Your vehicle has a programmable auto door locking/unlocking feature. For more information, see page 81 .

2.Adjust the Front Seats

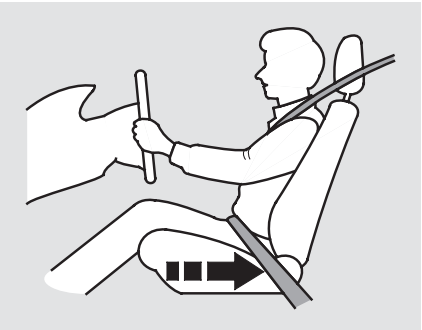

Adjust the driver's seat as far to the rear as possible while allowing you to maintain full control of the vehicle. Have a front passenger adjust their seat as far to the rear as possible.

CONTINUED

Protecting Adults and Teens

If you sit too close to the steering wheel or dashboard, you can be seriously injured by an inflating front airbag, or by striking the steering wheel or dashboard.

The National Highway Traffic Safety Administration and Transport Canada recommend that drivers allow at least 10 inches (25 cm) between the center of the steering wheel and the chest. In addition to adjusting the seat, you can adjust the steering wheel up and down, and in and out (see page 76).

If you cannot get far enough away from the steering wheel and still reach the controls, we recommend that you investigate whether some type of adaptive equipment may help.

⚠ WARNING

Sitting too close to a front airbag can result in serious injury or death if the front airbags inflate.

Always sit as far back from the front airbags as possible.

On manual adjustable seats
Once a seat is adjusted correctly, rock it back and forth to make sure it is locked in position.

See page 92 for how to adjust a front seat (power adjustment) and page 93 for a manual adjustment.

3.Adjust the Seat-Backs

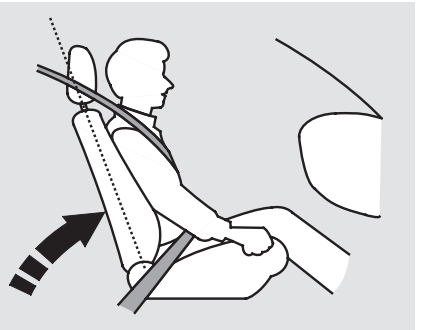

Adjust the driver's seat-back to a comfortable, upright position, leaving ample space between your chest and the airbag cover in the center of the steering wheel.

Passengers with adjustable seat-backs should also adjust their seat-back to a comfortable, upright position.

⚠ WARNING

Reclining the seat-back too far can result in serious injury or death in a crash.

Adjust the seat-back to an upright position, and sit well back in the seat.

Reclining a seat-back so that the shoulder part of the belt no longer rests against the occupant's chest reduces the protective capability of the belt. It also increases the chance of sliding under the belt in a crash and being seriously injured. The farther a seat-back is reclined, the greater the risk of injury.

See page 93 for how to adjust the manual adjustable seat-back, and page 92 for the power adjustable seat-back.

4. Adjust the Head Restraints

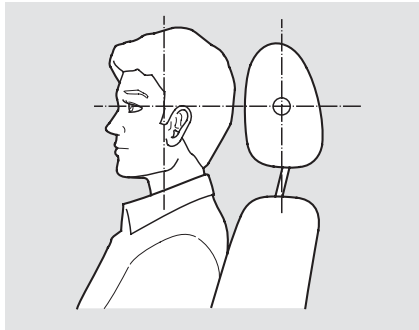

Adjust the driver's head restraint so the center of the back of your head rests against the center of the restraint.

Have passengers adjust their head restraints properly as well. Taller persons should adjust their restraint as high as possible.

⚠ WARNING

Improperly positioning head restraints reduces their effectiveness and you can be seriously injured in a crash.

Make sure head restraints are in place and positioned properly before driving.

Properly adjusted head restraints will help protect occupants from whiplash and other crash injuries.

See page 96 for how to adjust the head restraints and how the driver's and front passenger's active head restraints work.

5. Fasten and Position the Seat Belts

Insert the latch plate into the buckle, then tug on the belt to make sure the belt is securely latched. Check that the belt is not twisted, because a twisted belt can cause serious injuries in a crash.

Position the lap part of the belt as low as possible across your hips, then pull up on the shoulder part of the belt so the lap part fits snugly. This lets your strong pelvic bones take the force of a crash and reduces the chance of internal injuries.

If necessary, pull up on the belt again to remove any slack, then check that the belt rests across the center of your chest and over your shoulder.

This spreads the force of a crash over the strongest bones in your upper body.

⚠ WARNING

Improperly positioning the seat belts can cause serious injury or death in a crash.

Make sure all seat belts are properly positioned before driving.

Never place the shoulder portion of a lap/shoulder belt under your arm or behind your back. This could cause very serious injuries in a crash.

If a seat belt does not seem to work properly, it may not protect the occupant in a crash.

No one should sit in a seat with an inoperative seat belt. Using a seat belt that is not working properly can result in serious injury or death. Have your dealer check the belt as soon as possible.

See page 17 for additional information about your seat belts and how to take care of them.

6. Maintain a Proper Sitting Position

After all occupants have adjusted their seats and head restraints, and put on their seat belts, it is very important that they continue to sit upright, well back in their seats, with their feet on the floor, until the vehicle is safely parked and the engine is off.

Sitting improperly can increase the chance of injury during a crash. For example, if an occupant slouches, lies down, turns sideways, sits forward, leans forward or sideways, or puts one or both feet up, the chance of injury during a crash is greatly increased.

In addition, an occupant who is out of position in the front seat can be seriously or fatally injured in a crash by striking interior parts of the vehicle or being struck by an inflating front airbag.

⚠ WARNING

Sitting improperly or out of position can result in serious injury or death in a crash.

Always sit upright, well back in the seat, with your feet on the floor.

Advice for Pregnant Women

If you are pregnant, the best way to protect yourself and your unborn child when driving or riding in a vehicle is to always wear a seat belt, and keep the lap part of the belt as low as possible across the hips.

CONTINUED

Protecting Adults and Teens

When driving, remember to sit upright and adjust the seat as far back as possible while allowing full control of the vehicle. When riding as a front passenger, adjust the seat as far back as possible.

This will reduce the risk of injuries to both you and your unborn child that can be caused by a crash or an inflating front airbag.

Each time you have a checkup, ask your doctor if it's okay for you to drive.

Additional Safety Precautions

- ***Two people should never use the same seat belt.*** If they do, they could be very seriously injured in a crash.

- ***Do not put any accessories on seat belts.*** Devices intended to improve occupant comfort or reposition the shoulder part of a seat belt can reduce the protective capability of the seat belt and increase the chance of serious injury in a crash.

- ***Do not place hard or sharp objects between yourself and a front airbag.*** Carrying hard or sharp objects on your lap, or driving with a pipe or other sharp object in your mouth, can result in injuries if your front airbag inflates.

- ***Do not attach or place objects on the front airbag covers.*** Objects on the covers marked "SRS AIRBAG" could interfere with the proper operation of the airbags or be propelled inside the vehicle and hurt someone if the airbags inflate.

- ***Keep your hands and arms away from the airbag covers.*** If your hands or arms are close to an airbag cover, they could be injured if the airbag inflates.

- ***Do not attach hard objects on or near a door.*** If a side airbag or a side curtain airbag inflates, a cup holder or other hard object attached on or near the door could be propelled inside the vehicle and hurt someone.

- ***Do not cover or replace front seat-back covers without consulting your dealer.*** Improperly replacing or covering front seat-back covers can prevent your side airbags from inflating during a side impact.

Additional Information About Your Seat Belts

Seat Belt System Components
Your seat belt system includes lap/shoulder belts in all seating positions. The front seat belts are also equipped with automatic seat belt tensioners.

This system uses the same sensors as the front airbags to monitor whether the front seat belts are latched or unlatched, and how much weight is on the front passenger's seat (see pages 25 and 26).

The seat belt system includes an indicator on the instrument panel and a beeper to remind you and your passengers to fasten your seat belts.

This system monitors the front seat belts. If you turn the ignition switch to the ON (II) position before your seat belt is fastened, the beeper will sound and the indicator will flash. If your seat belt is not fastened before the beeper stops, the indicator will stop flashing but remain on.

If a front passenger does not fasten their seat belt, the indicator will come on about 6 seconds after the ignition switch is turned to the ON (II) position.

If either the driver or a front passenger does not fasten their seat belt while driving, the beeper will sound and the indicator will flash again at regular intervals.

When no one is sitting in the front passenger's seat, or a child or small adult is riding there, the indicator should not come on and the beeper should not sound.

If the indicator comes on or the beeper sounds when the driver's seat belt is latched and there is no front seat passenger and no items on the front seat, something may be interfering with the monitoring system. Look for and remove:

- Any items under the front passenger's seat.
- Any object(s) hanging on the seat or in the seat-back pocket.
- Any object(s) touching the rear of the seat-back.

If no obstructions are found, have your vehicle checked by a dealer.

Additional Information About Your Seat Belts

Lap/Shoulder Belt
The lap/shoulder belt goes over your shoulder, across your chest, and across your hips.

To fasten the belt, insert the latch plate into the buckle, then tug on the belt to make sure the buckle is latched (see page 14 for how to properly position the belt).

To unlock the belt, press the red PRESS button on the buckle. Guide the belt across your body so that it retracts completely. After exiting the vehicle, be sure the belt is out of the way and will not get closed in the door.

All seat belts have an emergency locking retractor. In normal driving, the retractor lets you move freely in your seat while it keeps some tension on the belt. During a collision or sudden stop, the retractor automatically locks the belt to help restrain your body.

The seat belts in all positions except the driver's have a lockable retractor that must be activated to secure a child seat (see page 44).

If the shoulder part of the belt is pulled all the way out, the lockable retractor will activate. The belt will retract, but it will not allow the passenger to move freely.

To deactivate the lockable retractor, unlatch the buckle and let the seat belt fully retract. To refasten the seat belt, pull it out only as far as needed.

Additional Information About Your Seat Belts

Automatic Seat Belt Tensioners

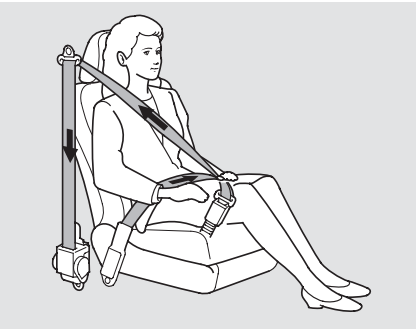

For added protection, the front seat belts are equipped with automatic seat belt tensioners. When activated, the tensioners immediately tighten the belts to help hold the driver and a front passenger in position.

The tensioners are designed to activate in any collision severe enough to cause the front airbags to deploy.

If a side curtain airbag deploys during a side impact, the tensioner on that side of the vehicle will also activate.

The tensioners can also be activated during a collision in which the front airbags *do not deploy*. In this case, the airbags would not be needed, but the extra tension in the seat belt could be helpful.

When the tensioners are activated, the seat belts will remain tight until they are unbuckled.

Seat Belt Maintenance

For safety, you should check the condition of your seat belts regularly.

Pull each belt out fully, and look for frays, cuts, burns, and wear. Check that the latches work smoothly and the belts retract easily. If a belt does not retract easily, cleaning the belt may correct the problem (see page 324). Any belt that is not in good condition or working properly will not provide good protection and should be replaced as soon as possible.

Honda provides a limited warranty on seat belts. See your *Honda Warranty Information* booklet for details.

CONTINUED

Additional Information About Your Seat Belts

If a seat belt is worn during a crash, it must be replaced by the dealer. A belt that has been worn during a crash may not provide the same level of protection in a subsequent crash.

The dealer should also inspect the anchors for damage and replace them if needed. If the automatic seat belt tensioners activate during a crash, they must be replaced.

⚠ WARNING

Not checking or maintaining seat belts can result in serious injury or death if the seat belts do not work properly when needed.

Check your seat belts regularly and have any problem corrected as soon as possible.

Additional Information About Your Airbags

Airbag System Components

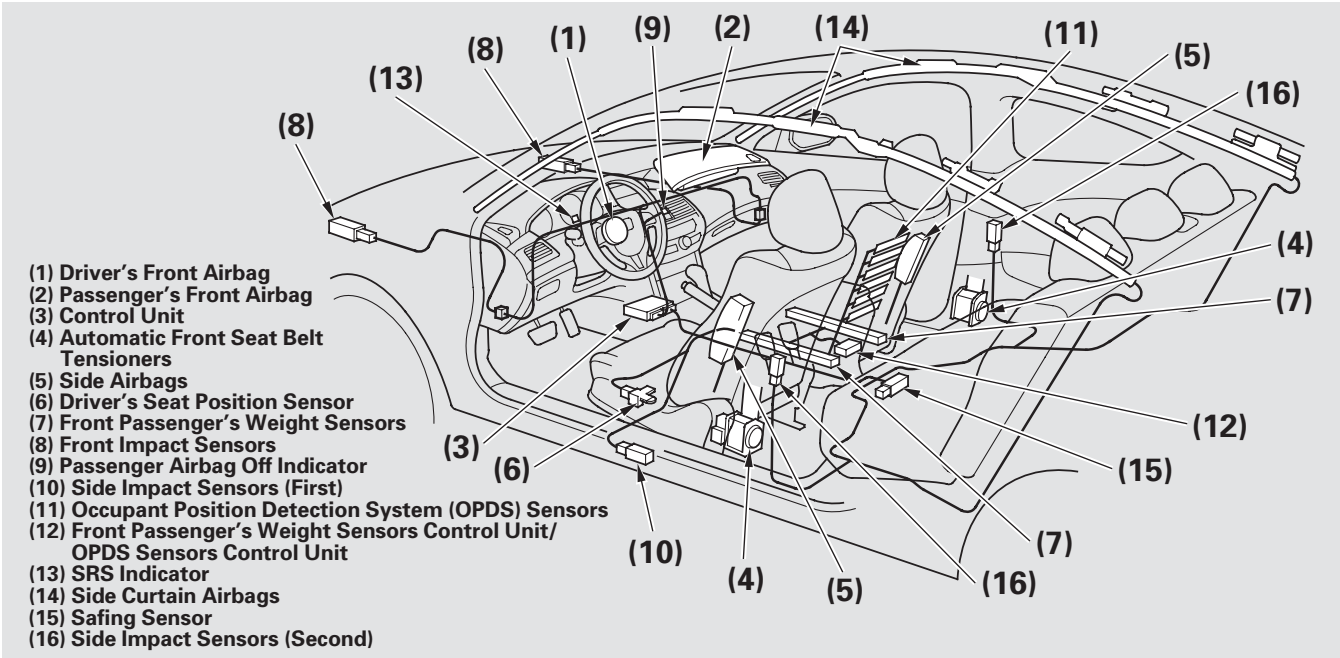

CONTINUED

Additional Information About Your Airbags

Your airbag system includes:

- Two SRS (supplemental restraint system) front airbags. The driver's airbag is stored in the center of the steering wheel; the front passenger's airbag is stored in the dashboard. Both are marked "SRS AIRBAG" (see page 23).
- Two side airbags, one for the driver and one for a front passenger. The airbags are stored in the outer edges of the seat-backs. Both are marked "SIDE AIRBAG" (see page 27).
- Two side curtain airbags, one for each side of the vehicle. The airbags are stored in the ceiling, above the side windows. The front and rear pillars are marked "SIDE CURTAIN AIRBAG" (see page 28).
- Automatic front seat belt tensioners (see page 19).
- Sensors that can detect a moderate to severe front impact or side impact.
- Sensors that can detect whether a child is in the passenger's side airbag path and signal the control unit to turn the airbag off (see page 28).
- Sensors that can detect whether the driver's seat belt and the front passenger's seat belt are latched or unlatched (see page 17).
- A driver's seat position sensor that monitors the distance of the seat from the front airbag. If the seat is too far forward, the airbag will inflate with less force (see page 25).
- Weight sensors that monitor the weight on the front passenger's seat. If the weight is about 65 lbs (29 kg) or less (the weight of an infant or small child), the passenger's front airbag will be turned off (see page 26).
- A sophisticated electronic system that continually monitors and records information about the sensors, the control unit, the airbag activators, the seat belt tensioners, and driver and front passenger seat belt use when the ignition switch is in the ON (II) position.
- An indicator on the instrument panel that alerts you to a possible problem with your airbags, sensors, or seat belt tensioners (see page 29).

Additional Information About Your Airbags

- An indicator on the instrument panel that alerts you that the passenger's side airbag has been turned off (see page 30).
- An indicator on the dashboard that alerts you that the passenger's front airbag has been turned off (see page 30).
- Emergency backup power in case your vehicle's electrical system is disconnected in a crash.

How Your Front Airbags Work

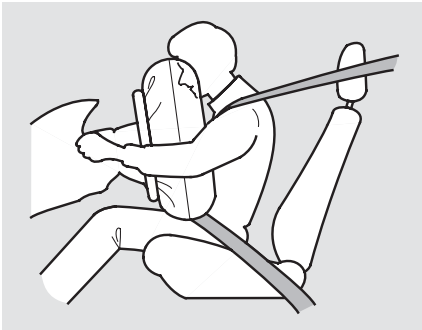

If you ever have a moderate to severe frontal collision, sensors will detect the vehicle's rapid deceleration.

If the rate of deceleration is high enough, the control unit will inflate the driver's and front passenger's airbags, at the time and with the force needed.

During a frontal crash, your seat belt restrains your lower body and torso, and the front airbag helps protect your head and chest.

Although both airbags normally inflate within a split second of each other, it is possible for only one airbag to deploy.

This can happen if the severity of a collision is at the margin, or threshold, that determines whether or not the airbags will deploy. In such cases, the seat belt will provide sufficient protection, and the supplemental protection offered by the airbag would be minimal.

Only the driver's airbag can deploy if there is no passenger in the front seat, or if the advanced airbag system has turned the passenger's airbag off (see page 26).

CONTINUED

Additional Information About Your Airbags

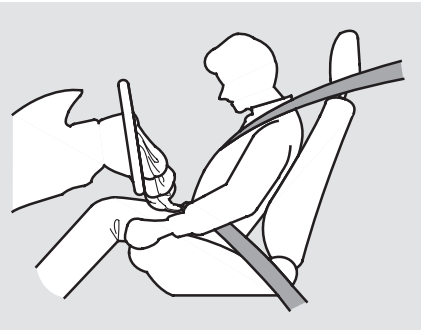

After inflating, the front airbags immediately deflate, so they won't interfere with the driver's visibility, or the ability to steer or operate other controls.

The total time for inflation and deflation is one-tenth of a second, so fast that most occupants are not aware that the airbags deployed until they see them lying in their laps.

After a crash, you may see what looks like smoke. This is actually powder from the airbag's surface. Although the powder is not harmful, people with respiratory problems may experience some temporary discomfort. If this occurs, get out of the vehicle as soon as it is safe to do so.

Dual-Stage Airbags

Your front airbags are dual-stage airbags. This means they have two inflation stages that can be ignited sequentially or simultaneously, depending on crash severity.

In a ***more severe*** crash, both stages will ignite simultaneously to provide the quickest and greatest protection.

In a ***less severe*** crash, one stage will ignite first, then the second stage will ignite a split second later. This provides longer airbag inflation time with a little less force.

Additional Information About Your Airbags

Dual-Threshold Airbags
Your front airbags are also dual-threshold airbags. Airbags with this feature have two deployment thresholds that depend on whether sensors detect the occupant is wearing a seat belt or not.

If the occupant's belt is ***not latched***, the airbag will deploy at a slightly lower threshold, because the occupant would need extra protection.

If the occupant's belt is ***latched***, the airbag will inflate at a slightly higher threshold, when the airbag would be needed to supplement the protection provided by the seat belt.

Advanced Airbags
Your front airbags are also advanced airbags. The main purpose of this feature is to help prevent airbag-caused injuries to short drivers and children or small-statured adults who ride in front.

For both advanced airbags to work properly:

- Occupants must sit upright and wear their seat belts properly.
- Do not spill any liquids on or under the seats, cover the sensors, or put any objects or metal items under the front seats.

Failure to follow these instructions could damage the sensors or prevent them from working properly.

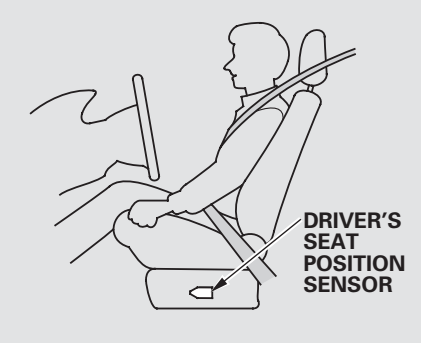

The driver's advanced front airbag system includes a seat position sensor under the seat. If the seat is too far forward, the airbag will inflate with less force, regardless of the severity of the impact.

If there is a problem with the sensor, the SRS indicator will come on, and the airbag will inflate in the normal manner regardless of the driver's seating position.

CONTINUED

Additional Information About Your Airbags

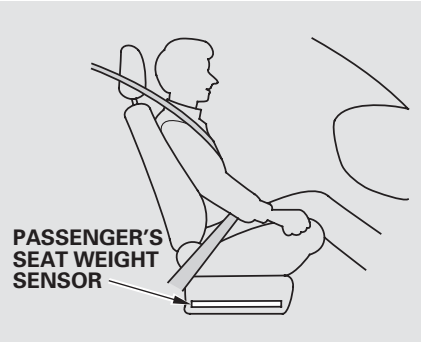

The passenger's advanced front airbag system has weight sensors under the seat. Although Honda does not encourage carrying an infant or small child in front, if the sensors detect the weight of an infant or small child (up to about 65 lbs or 29 kg), the system will automatically turn the passenger's front airbag off.

Be aware that objects placed on the passenger's seat can also cause the airbag to be turned off.

When the passenger airbag gets turned off by the weight sensors, a "passenger airbag off" indicator in the center of the dashboard comes on (see page 30).

If the weight sensors detect there is no passenger in the front seat, the airbag is automatically turned off. However, the passenger airbag off indicator in this situation will not come on.

To ensure that the passenger's advanced front airbag system will work properly, ***do not do anything that would increase or decrease the weight on the front passenger's seat.*** This includes:

- A rear passenger pushing or pulling on the back of the front passenger's seat.
- Moving the front seat or seat-back forcibly back against cargo on the seat or floor behind it.
- Hanging heavy items on the front passenger seat, or placing heavy items in the seat-back pocket.
- Moving the front seat or seat-back forcibly back against the folded rear seat.

- Back seat passengers should not wedge objects or intentionally force their feet under the front passenger seat.

- Also, make sure the floor mat behind the front passenger's seat is hooked to the floor mat anchor (see page 325). If it is not, the mat may interfere with the proper operation of the sensors and operation of the seat.

How Your Side Airbags Work

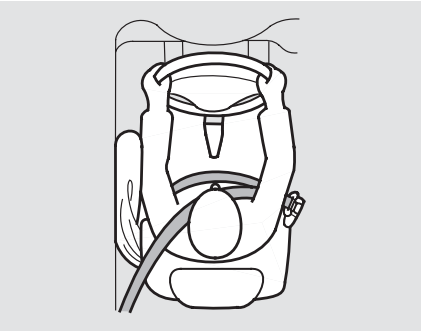

If you ever have a moderate to severe side impact, sensors will detect rapid acceleration and signal the control unit to instantly inflate either the driver's or the passenger's side airbag.

Only one airbag will deploy during a side impact. If the impact is on the passenger's side, the passenger's side airbag will deploy even if there is no passenger.

To get the best protection from the side airbags, front seat occupants should wear their seat belts and sit upright and well back in their seats.

CONTINUED

Additional Information About Your Airbags

Side Airbag Cutoff System

Your vehicle has a side airbag cutoff system designed primarily to protect a child riding in the front passenger's seat.

Although Honda does not encourage children to ride in front, if the position sensors detect a child has leaned into the side airbag's deployment path, the airbag will shut off.

The side airbag may also shut off if a short adult leans sideways, or a larger adult slouches and leans sideways into the airbag's deployment path.

Objects placed on the front passenger seat can also cause the side airbag to be shut off.

If the side airbag off indicator comes on (see page 30), have the passenger sit upright. Once the passenger is out of the airbag's deployment path, the system will turn the airbag back on, and the indicator will go out.

There will be some delay between the moment the passenger moves into or out of the airbag deployment path and when the indicator comes on or goes off.

A front seat passenger should not use a cushion or another object as a backrest. It may prevent the cutoff system from working properly.

How Your Side Curtain Airbags Work

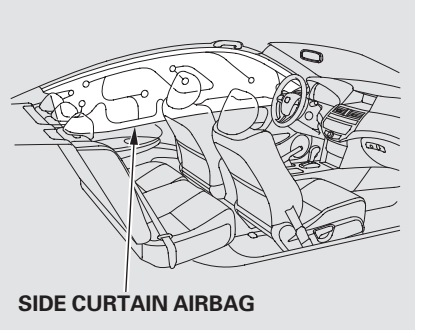

In a moderate to severe side impact, sensors will detect rapid acceleration and signal the control unit to instantly inflate the side curtain airbag and activate the seat belt tensioner on the driver's or the passenger's side of the vehicle.

If the impact is on the passenger's side, the passenger's side curtain airbag will inflate even if there are no occupants on that side of the vehicle.

One or both side curtain airbags may inflate in a moderate to severe frontal collision which causes the front airbags to deploy.

To get the best protection from the side curtain airbags, occupants should wear their seat belts and sit upright and well back in their seats.

How the SRS Indicator Works

The SRS indicator alerts you to a potential problem with your airbags or seat belt tensioners.

When you turn the ignition switch to the ON (II) position, this indicator comes on briefly then goes off. This tells you the system is working properly.

If the indicator comes on at any other time, or does not come on at all, you should have the system checked by your dealer. For example:

- If the SRS indicator does not come on after you turn the ignition switch to the ON (II) position.
- If the indicator stays on after the engine starts.
- If the indicator comes on or flashes on and off while you drive.

If you see any of these indications, the airbags and seat belt tensioners may not work properly when you need them.

⚠ WARNING

Ignoring the SRS indicator can result in serious injury or death if the airbag systems or tensioners do not work properly.

Have your vehicle checked by a dealer as soon as possible if the SRS indicator alerts you to a possible problem.

Additional Information About Your Airbags

How the Side Airbag Off Indicator Works

This indicator alerts you that the passenger's side airbag has been automatically shut off. It does ***not*** mean there is a problem with your side airbags.

When you turn the ignition switch to the ON (II) position, the indicator should come on briefly and then go off (see page 57). If it doesn't come on, stays on, or comes on while driving without a passenger in the front seat, have the system checked.

How the Passenger Airbag Off Indicator Works

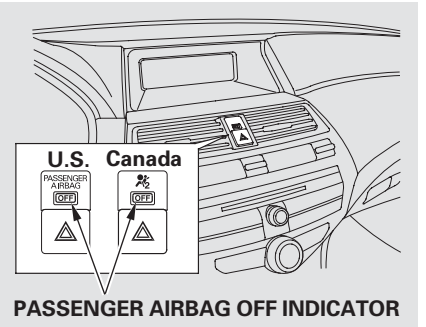

PASSENGER AIRBAG OFF INDICATOR

This indicator alerts you that the passenger's front airbag has been shut off because weight sensors detect about 65 lbs (29 kg) or less (the weight of an infant or small child) on the front passenger's seat. It does ***not mean*** there is a problem with the airbag.

Be aware that objects placed on the front seat can cause the indicator to come on.

If no weight is detected on the front seat, the airbag will be automatically shut off. However, the indicator will not come on.

The passenger airbag off indicator may come on and off repeatedly if the total weight on the seat is near the airbag cutoff threshold.

If an adult or teenage passenger is riding in front, move the seat as far to the rear as possible, and have the passenger sit upright and wear the seat belt properly.

Additional Information About Your Airbags

If the indicator comes on with no front seat passenger and no objects on the seat, or with an adult riding there, something may be interfering with the weight sensors. Look for and remove:

- Any items under the front passenger's seat.
- Any object hanging on the seat or in the seat-back pocket.
- Any object(s) touching the rear of the seat-back.

If no obstructions are found, have your vehicle checked by a dealer as soon as possible.

Airbag Service

Your airbag systems are virtually maintenance free, and there are no parts you can safely service. However, you must have your vehicle serviced if:

- ***An airbag ever inflates.*** Any airbag that has deployed must be replaced along with the control unit and other related parts. Any seat belt tensioner that activates must also be replaced.

  Do not try to remove or replace any airbag by yourself. This must be done by an authorized dealer or a knowledgeable body shop.

- ***The SRS indicator alerts you to a problem.*** Take your vehicle to an authorized dealer as soon as possible. If you ignore this indication, your airbags may not operate properly.

- ***If your vehicle has a moderate to severe impact.*** Even if your airbags do not inflate, your dealer should inspect the driver's seat position sensor, the front passenger's weight sensors, the front seat belt tensioners, and all seat belts and their anchors worn during a crash to make sure they are operating properly.

Additional Information About Your Airbags

Additional Safety Precautions

- ***Do not attempt to deactivate your airbags.*** Together, airbags and seat belts provide the best protection.

- ***Do not tamper with airbag components or wiring for any reason.*** Tampering could cause the airbags to deploy, possibly causing very serious injury.

- ***Do not remove or modify a front seat without consulting your dealer.*** This could make the driver's seat position sensor or the front passenger's weight sensors ineffective. If it is necessary to remove or modify a front seat to accommodate a person with disabilities, first contact Honda Automobile Customer Service at (800) 999-1009.

- ***Do not expose the front passenger's seat-back to liquid.*** If water or another liquid soaks into a seat-back, it can prevent the side airbag cutoff system from working properly.

Children depend on adults to protect them. However, despite their best intentions, many adults do not know how to *properly* protect child passengers.

If you have children, or ever need to drive with a child in your vehicle, be sure to read this section. It begins with important general guidelines, then presents special information for infants, small children, and larger children.

All Children Must Be Restrained

Each year, many children are injured or killed in vehicle crashes because they are either unrestrained or not properly restrained. In fact, vehicle accidents are the number one cause of death of children age 12 and under.

To reduce the number of child deaths and injuries, every state, Canadian province and territory requires that infants and children be properly restrained when they ride in a vehicle.

Infants and small children must be restrained in an approved child seat that is properly secured to the vehicle (see pages 38 — 46).

⚠ WARNING

Children who are unrestrained or improperly restrained can be seriously injured or killed in a crash.

Any child too small for a seat belt should be properly restrained in a child seat. A larger child should be properly restrained with a seat belt and use a booster seat if necessary.

Larger children must be restrained with a lap/shoulder belt and ride on a booster seat until the seat belt fits them properly (see pages 47 — 50).

Protecting Children — General Guidelines

All Children Should Sit in a Back Seat
According to accident statistics, children of all ages and sizes are safer when they are restrained in a back seat.

The National Highway Traffic Safety Administration and Transport Canada recommend that all children age 12 and under be properly restrained in a back seat. Some states have laws restricting where children may ride.

Children who ride in back are less likely to be injured by striking interior vehicle parts during a collision or hard braking. Also, children cannot be injured by an inflating front airbag when they ride in the back.

The Passenger's Front Airbag Can Pose Serious Risks
Front airbags have been designed to help protect adults in a moderate to severe frontal collision. To do this, the passenger's front airbag is quite large, and it can inflate with enough force to cause very serious injuries.

Even though your vehicle has an advanced front airbag system that automatically turns the passenger's front airbag off under certain circumstances (see page 30), please follow these guidelines:

Infants
Never put a rear-facing child seat in the front seat of a vehicle equipped with a passenger's front airbag. If the airbag inflates, it can hit the back of the child seat with enough force to kill or very seriously injure an infant.

Small Children
Placing a forward-facing child seat in the front seat of a vehicle equipped with a passenger's front airbag can be hazardous. If the vehicle seat is too far forward, or the child's head is thrown forward during a collision, an inflating front airbag can strike the child with enough force to kill or very seriously injure a small child.

Larger Children
Children who have outgrown child seats are also at risk of being injured or killed by an inflating passenger's front airbag. Whenever possible, larger children should sit in the back seat, on a booster seat if needed, and be properly restrained with a seat belt (see page 47 for important information about protecting larger children).

To remind you of the passenger's front airbag hazards, and that children must be properly restrained in a back seat, your vehicle has warning labels on the dashboard (U.S. models) and on the front visors. Please read and follow the instructions on these labels.

U.S. Models

SUN VISORS

DASHBOARD

Canadian Models

SUN VISORS

CAUTION
TO AVOID SERIOUS INJURY:
- FOR MAXIMUM SAFETY PROTECTION IN ALL TYPES OF CRASHES, YOU MUST ALWAYS WEAR YOUR SAFETY BELT.
- DO NOT INSTALL REARWARD-FACING CHILD SEATS IN ANY FRONT PASSENGER SEAT POSITION.
- DO NOT SIT OR LEAN UNNECESSARILY CLOSE TO THE AIR BAG.
- DO NOT PLACE ANY OBJECTS OVER THE AIR BAG OR BETWEEN THE AIR BAG AND YOURSELF.
- SEE THE OWNER'S MANUAL FOR FURTHER INFORMATION AND EXPLANATIONS.

PRÉCAUTION:
POUR EVITER DES BLESSURES GRAVES:
- POUR PROFITER D'UNE PROTECTION MAXIMALE LORS D'UNE COLLISION BOUCLEZ TOUJOURS VOTRE CEINTURE DE SECURITE.
- N'INSTALLEZ JAMAIS UN SIEGE POUR ENFANTS FAISANT FACE A L'ARRIERE SUR LE SIEGE DU PASSAGER AVANT.
- NE VOUS APPUYEZ PAS ET NE VOUS ASSEYEZ PAS PRES DU COUSSIN GONFLABLE.
- NE DEPOSEZ AUCUN OBJET SUR LE COUSSIN GONFLABLE OU ENTRE LE COUSSIN GONFLABLE ET VOUS.
- LISEZ LE GUIDE UTILISATEUR POUR DE PLUS AMPLES RENSEIGNEMENTS.

Protecting Children — General Guidelines

If You Must Drive with Several Children

Your vehicle has a back seat where children can be properly restrained. If you ever have to carry a group of children, and a child must ride in front:

- Place the largest child in the front seat, provided the child is large enough to wear the lap/shoulder belt properly (see page 47).
- Move the vehicle seat as far to the rear as possible (see pages 92 and 93).
- Have the child sit upright and well back in the seat (see page 15).
- Make sure the seat belt is properly positioned and secured (see page 14).

If a Child Requires Close Attention

Many parents say they prefer to put an infant or a small child in the front passenger seat so they can watch the child, or because the child requires attention.

Placing a child in the front seat exposes the child to hazards in a frontal collision, and paying close attention to a child distracts the driver from the important tasks of driving, placing both of you at risk.

If a child requires close physical attention or frequent visual contact, we strongly recommend that another adult ride with the child in a back seat. The back seat is far safer for a child than the front.

Additional Safety Precautions

- ***Never hold an infant or child on your lap.*** If you are not wearing a seat belt in a crash, you could be thrown forward and crush the child against the dashboard or a seat-back. If you are wearing a seat belt, the child can be torn from your arms and be seriously hurt or killed.

- ***Never put a seat belt over yourself and a child.*** During a crash, the belt could press deep into the child and cause serious or fatal injuries.

- ***Never let two children use the same seat belt.*** If they do, they could be very seriously injured in a crash.

- ***Make sure any unused seat belt that a child can reach is buckled, the lockable retractor is activated, and the belt is fully retracted and locked.*** If a child wraps a loose seat belt around their neck, they can be seriously or fatally injured. (See pages 44 and 45 for how to activate and deactivate the lockable retractor.)

- ***Do not leave children alone in a vehicle.*** Leaving children without adult supervision is illegal in most states, Canadian provinces and territories, and can be very hazardous.

  For example, infants and small children left in a vehicle on a hot day can die from heatstroke. A child left alone with the key in the ignition switch can accidentally set the vehicle in motion, possibly injuring themselves or others.

- ***Lock both doors and the trunk when your vehicle is not in use.*** Children who play in vehicles can accidentally get trapped inside. Teach your children not to play in or around vehicles. Know how to operate the emergency trunk opener and decide if your children should be shown how to use this feature (see page 91).

- ***Keep vehicle keys/remote transmitters out of the reach of children.*** Even very young children learn how to unlock vehicle doors, turn on the ignition switch, and open the trunk, which can lead to accidental injury or death.

Protecting Infants and Small Children

Protecting Infants

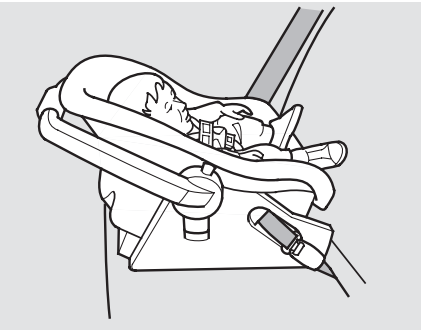

Child Seat Type
An infant must be properly restrained in a rear-facing, reclining child seat until the child reaches the seat maker's weight or height limit for the seat, and the child is at least one year old.

Only a rear-facing child seat provides proper support for a baby's head, neck, and back.

Two types of seats may be used: a seat designed exclusively for infants, or a convertible seat used in the rear-facing, reclining mode.

Do not put a rear-facing child seat in a forward-facing position. If placed facing forward, an infant could be very seriously injured during a frontal collision.

Rear-facing Child Seat Placement
A rear-facing child seat can be placed in any seating position in the back seat, but not in the front. ***Never put a rear-facing child seat in the front seat.***

If the passenger's front airbag inflates, it can hit the back of the child seat with enough force to kill or seriously injure an infant.

When properly installed, a rear-facing child seat may prevent the driver or a front passenger from moving their seat as far back as recommended, or from locking their seat-back in the desired position.

It can also interfere with proper operation of the passenger's advanced front airbag system.

In any of these situations, we strongly recommend that you install the child seat directly behind the front passenger's seat, move the seat as far forward as needed, and leave it unoccupied. Or, you may wish to get a smaller rear-facing child seat.

⚠ WARNING

Placing a rear-facing child seat in the front seat can result in serious injury or death during a collision.

Always place a rear-facing child seat in the back seat, not the front.

Protecting Small Children

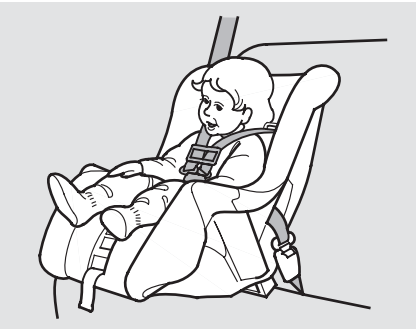

Child Seat Type
Many states, Canadian provinces and territories allow a child one year of age or older who also meets the minimum size and weight requirements to transition from a rear-facing child seat to a forward facing seat. Know the requirements where you are driving and follow the child seat instructions. Many experts recommend use of a rear-facing seat up to age two, if the child's height and weight are appropriate for a rear-facing seat.

Of the different seats available, we recommend those that have a five-point harness system as shown.

We also recommend that a small child use the child seat until the child reaches the weight or height limit for the seat.

Child Seat Placement
We strongly recommend placing a forward-facing child seat in a back seat, not the front.

Placing a forward-facing child seat in the front seat of a vehicle equipped with a passenger's airbag can be hazardous. If the vehicle seat is too far forward, or the child's head is thrown forward during a collision, an inflating airbag can strike the child with enough force to cause very serious or fatal injuries.

Even with advanced front airbags that automatically turn the passenger's front airbag off (see page 25), a back seat is the safest place for a small child.

CONTINUED

Protecting Infants and Small Children, Selecting a Child Seat

If it is necessary to put a forward-facing child seat in the front, move the vehicle seat as far to the rear as possible, and be sure the child seat is firmly secured to the vehicle and the child is properly strapped in the seat.

⚠ WARNING

Placing a forward-facing child seat in the front seat can result in serious injury or death if the front airbag inflates.

If you must place a forward-facing child seat in front, move the vehicle seat as far back as possible, and properly restrain the child.

Selecting a Child Seat

When buying a child seat, you need to choose either a conventional child seat, or one designed for use with the Lower Anchors and Tethers for CHildren (LATCH) system.

Conventional child seats must be secured to a vehicle with a seat belt, whereas LATCH-compatible seats are secured by attaching the seat to hardware built into the two outer seating positions in the back seat.

Since LATCH-compatible child seats are easier to install and reduce the possibility of improper installation, we recommend selecting this style.

In seating positions and vehicles not equipped with LATCH, a LATCH-compatible child seat can be installed using a seat belt.

Whatever type of seat you choose, to provide proper protection, a child seat should meet three requirements:

1. ***The child seat should meet Federal Motor Vehicle Safety Standard 213 or Canadian Motor Vehicle Safety Standard 213.*** Look for FMVSS 213 or CMVSS 213 on the box.

2. ***The child seat should be of the proper type and size to fit the child.*** Rear-facing for infants, forward-facing for small children.

3. The child seat should fit the vehicle seating position (or positions) where it will be used.

Before purchasing a conventional child seat, or using a previously purchased one, we recommend that you test the seat in the specific vehicle seating position or positions where the seat will be used.

Installing a Child Seat

After selecting a proper child seat and a good place to install the seat, there are three main steps in installing the seat:

1. ***Properly secure the child seat to the vehicle.*** All child seats must be secured to the vehicle with the lap part of a lap/shoulder belt or with the LATCH (Lower Anchors and Tethers for CHildren) system. A child whose seat is not properly secured to the vehicle can be endangered in a crash.

2. ***Make sure the child seat is firmly secured.*** After installing a child seat, push and pull the seat forward and from side-to-side to verify that it is secure.

A child seat secured with a seat belt should be installed as firmly as possible. However, it does not need to be “rock solid.” Some side-to-side movement can be expected and should not reduce the child seat’s effectiveness.

If the child seat is not secure, try installing it in a different seating position, or use a different style of child seat that can be firmly secured.

3. ***Secure the child in the child seat.*** Make sure the child is properly strapped in the child seat according to the child seat maker’s instructions. A child who is not properly secured in a child seat can be seriously injured in a crash.

The following pages provide guidelines on how to properly install a child seat. A forward-facing child seat is used in all examples, but the instructions are the same for a rear-facing child seat.

Installing a Child Seat

Installing a Child Seat with LATCH

Your vehicle is equipped with LATCH (Lower Anchors and Tethers for CHildren) at the outer rear seats.

The lower anchors are located between the seat-back and seat bottom, and are to be used only with a child seat designed for use with LATCH.

The location of each lower anchor is indicated by a small button above the anchor point.

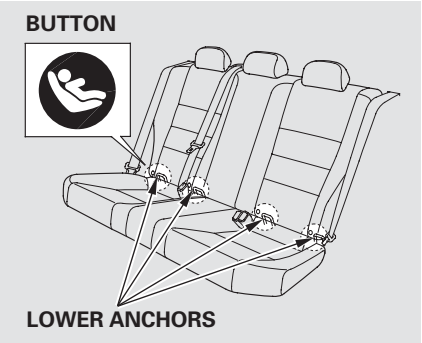

To install a LATCH-compatible child seat:

1. Move the seat belt buckle or tongue away from the lower anchors.

2. Make sure there are no objects near the anchors that could prevent a secure connection between the child seat and the anchors.

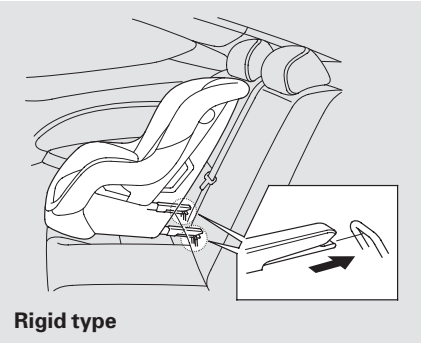

3. Place the child seat on the vehicle seat, then attach the seat to the lower anchors according to the child seat maker's instructions.

   Some LATCH-compatible seats have a rigid-type connector as shown above.

Installing a Child Seat

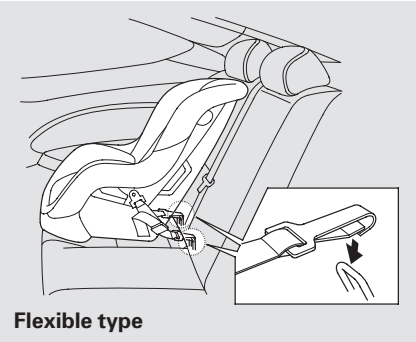
Flexible type

Other LATCH-compatible seats have a flexible-type connector as shown above.

4. Whatever type you have, follow the child seat maker's instructions for adjusting or tightening the fit.

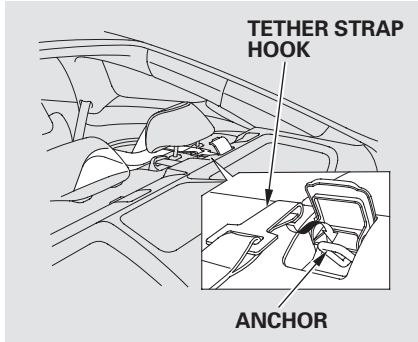

5. Lift the head restraint (see page 96), then route the tether strap through the legs of the head restraint and over the seat-back, making sure the strap is not twisted.

6. Attach the tether strap hook to the tether anchor, then tighten the strap as instructed by the child seat maker.

7. Push and pull the child seat forward and from side-to-side to verify that it is secure.

Installing a Child Seat

Installing a Child Seat with a Lap/ Shoulder Belt

When not using the LATCH system, all child seats must be secured to the vehicle with the lap part of a lap/ shoulder belt.

In addition, the lap/shoulder belts in all seating positions except the driver's have a lockable retractor that must be activated to secure a child seat.

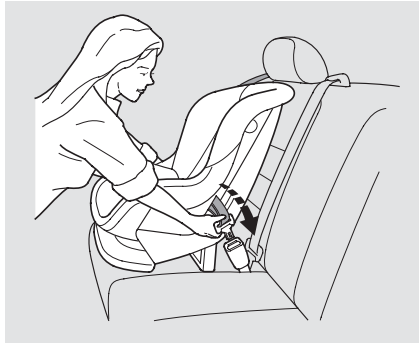

1. With the child seat in the desired seating position, route the belt through the child seat according to the seat maker's instructions, then insert the latch plate into the buckle and remove any slack from the lap portion of the belt.

2. To activate the lockable retractor, slowly pull the shoulder part of the belt all the way out until it stops, then let the belt feed back into the retractor.

3. After the belt has retracted, tug on it. If the belt is locked, you will not be able to pull it out. If you can pull the belt out, it is not locked, and you will need to repeat these steps.

Installing a Child Seat

4. After confirming that the belt is locked, grab the shoulder part of the belt near the buckle, and pull up to remove any slack from the lap part of the belt. Remember, if the lap part of the belt is not tight, the child seat will not be secure.

   To remove slack, it may help to put weight on the child seat, or push on the back of the seat while pulling up on the belt.

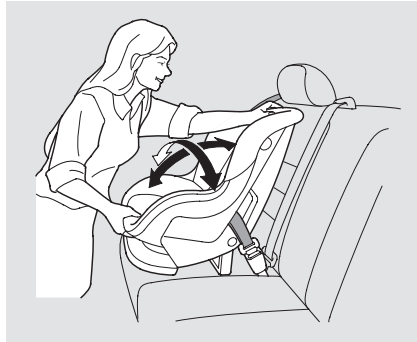

5. Push and pull the child seat forward and from side-to-side to verify that it is secure enough to stay upright during normal driving maneuvers. If the child seat is not secure, unlatch the belt, allow it to retract fully, then repeat these steps.

To deactivate the lockable retractor and remove a child seat, unlatch the buckle, unroute the seat belt, and let the belt fully retract.

Installing a Child Seat

Installing a Child Seat with a Tether

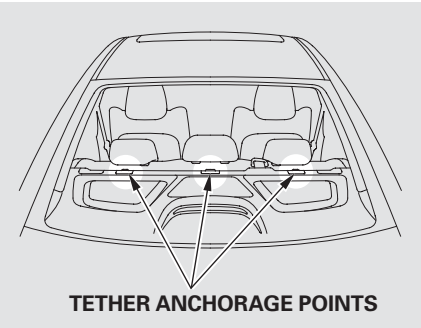

A child seat with a tether can be installed in any seating position in the back seat, using one of the anchorage points shown above.

Since a tether can provide additional security to the lap/shoulder belt installation, we recommend using a tether whenever one is required or available.

Using an Anchor

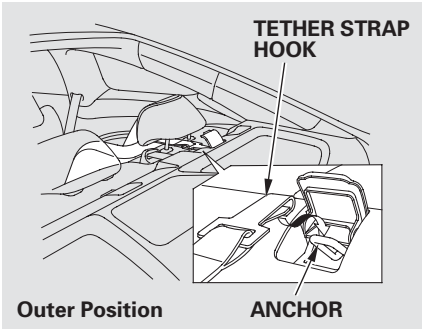

1. After properly securing the child seat (see page 44), lift the head restraint, then route the tether strap over the seat-back and through the head restraint legs.

2. Lift the cover, then attach the tether strap hook to the anchor, making sure the strap is not twisted.

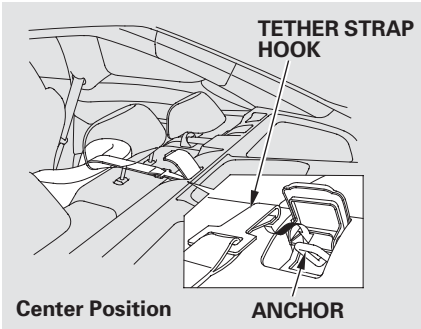

3. Tighten the strap according to the seat maker's instructions.

Protecting Larger Children

When a child reaches the recommended weight or height limit for a forward-facing child seat, the child should sit in a back seat on a booster seat and wear the lap/shoulder belt.

The following pages give instructions on how to check proper seat belt fit, what kind of booster seat to use if one is needed, and important precautions for a child who must sit in front.

⚠ WARNING

Allowing a child age 12 or under to sit in front can result in injury or death if the passenger's front airbag inflates.

If a child must ride in front, move the vehicle seat as far back as possible, use a booster seat if needed, have the child sit up properly and wear the seat belt properly.

Checking Seat Belt Fit

To determine if a lap/shoulder belt properly fits a child, have the child put on the seat belt, then ask yourself:

1. Does the child sit all the way back against the seat?

2. Do the child's knees bend comfortably over the edge of the seat?

CONTINUED

Protecting Larger Children

3. Does the shoulder belt cross between the child's neck and arm?

4. Is the lap part of the belt as low as possible, touching the child's thighs?

5. Will the child be able to stay seated like this for the whole trip?

If you answer yes to all these questions, the child is ready to wear the lap/shoulder belt correctly. If you answer no to any question, the child needs to ride on a booster seat.

Using a Booster Seat

A child who has outgrown a forward-facing child seat should ride in a back seat and use a booster seat until the lap/shoulder belt fits them properly without the booster.

Some states, Canadian provinces and territories also require children to use a booster seat until they reach a given age or weight (e.g., 6 years or 60 lbs). Be sure to check current laws in the states, provinces or territories where you intend to drive.

Booster seats can be high-back or low-back. Whichever style you select, make sure the booster seat meets federal safety standards (see page 40) and that you follow the booster seat maker's instructions.

Protecting Larger Children

If a child who uses a booster seat must ride in front, move the vehicle seat as far back as possible and be sure the child is wearing the seat belt properly.

A child may continue using a booster seat until the tops of their ears are even with the top of the vehicle's or booster's seat-back. A child of this height should be tall enough to use the lap/shoulder belt without a booster seat.

When Can a Larger Child Sit in Front

The National Highway Traffic Safety Administration and Transport Canada recommend that all children aged 12 and under be properly restrained in a back seat.

If the passenger's front airbag inflates in a moderate to severe frontal collision, the airbag can cause serious injuries to a child who is unrestrained, improperly restrained, sitting too close to the airbag, or out of position.

A side airbag also poses risks. If any part of a larger child's body is in the path of a deploying side airbag, the child could receive possibly serious injuries.

Of course, children vary widely. And while age may be one indicator of when a child can safely ride in front, there are other important factors you should consider.

Physical Size

Physically, a child must be large enough for the lap/shoulder belt to properly fit (see pages 14 and 47). If the seat belt does not fit properly, with or without the child sitting on a booster seat, the child should not sit in front.

Maturity

To safely ride in front, a child must be able to follow the rules, including sitting properly, and wearing the seat belt properly throughout a ride.

CONTINUED

Protecting Larger Children

If you decide that a child can safely ride up front, be sure to:

- Carefully read the owner's manual, and make sure you understand all seat belt instructions and all safety information.
- Move the vehicle seat to the rear-most position.
- Have the child sit up straight, back against the seat, and feet on or near the floor.
- Check that the child's seat belt is properly and securely positioned.
- Supervise the child. Even mature children sometimes need to be reminded to fasten the seat belts or sit properly.

Additional Safety Precautions

- ***Do not let a child wear a seat belt across the neck.*** This could result in serious neck injuries during a crash.
- ***Do not let a child put the shoulder part of a seat belt behind the back or under the arm.*** This could cause very serious injuries during a crash. It also increases the chance that the child will slide under the belt in a crash and be injured.
- ***Two children should never use the same seat belt.*** If they do, they could be very seriously injured in a crash.
- ***Do not put any accessories on a seat belt.*** Devices intended to improve a child's comfort or reposition the shoulder part of a seat belt can make the belt less effective and increase the chance of serious injury in a crash.

Carbon Monoxide Hazard

Your vehicle's exhaust contains carbon monoxide gas. Carbon monoxide should not enter the vehicle in normal driving if you maintain your vehicle properly and follow the information on this page.

Have the exhaust system inspected for leaks whenever:

- The vehicle is raised for an oil change.
- You notice a change in the sound of the exhaust.
- The vehicle was in a collision that may have damaged the underside.

⚠ WARNING

Carbon monoxide gas is toxic. Breathing it can cause unconsciousness and even kill you.

Avoid any enclosed areas or activities that expose you to carbon monoxide.

High levels of carbon monoxide can collect rapidly in enclosed areas, such as a garage. Do not run the engine with the garage door closed. Even with the door open, run the engine only long enough to move the vehicle out of the garage.

With the trunk open, airflow can pull exhaust gas into your vehicle's interior and create a hazardous condition. If you must drive with the trunk open, open all the windows and set the heating and cooling system/climate control system as shown below.

If you must sit in your parked vehicle with the engine running, even in an unconfined area, adjust the heating and cooling system/climate control system as follows:

1. Select the fresh air mode.
2. Select the mode.
3. Turn the fan on high speed.
4. Set the temperature control to a comfortable setting.

Safety Labels

These labels are in the locations shown. They warn you of potential hazards that could cause serious injury or death. Read these labels carefully.

If a label comes off or becomes hard to read (except for the U.S. dashboard label which may be removed by the owner), contact your dealer for a replacement.

SUN VISORS

U.S. models

Canadian models

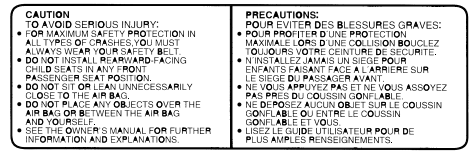

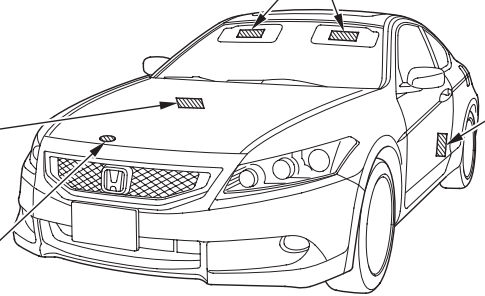

DASHBOARD

U.S. models only

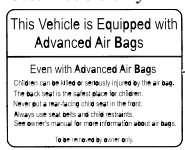

RADIATOR CAP

DOORJAMBS

U.S. models

Canadian models

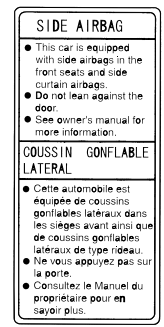

Instruments and Controls

This section gives information about the controls and displays that contribute to the daily operation of your vehicle. All the essential controls are within easy reach.

Control Locations 54
Instrument Panel 55
Instrument Panel Indicators..... 56
Gauges 63
Information Display..... 64
Odometer..... 64
Trip Meter 65
Fuel Gauge 65
Temperature Gauge 65
Outside Temperature Indicator..... 66
Check Fuel Cap Message..... 67
Maintenance Minder..... 67
Controls Near the Steering Wheel 68
Windshield Wipers and Washers .. 69
Turn Signals and Headlights..... 70
Fog Lights..... 73
Instrument Panel Brightness 73
Hazard Warning Button..... 74
Rear Window Defogger 75
Steering Wheel Adjustments 76
Keys and Locks..... 77
Immobilizer System..... 78
Ignition Switch 79
Door Locks 80
Auto Door Locking/Unlocking.. 81
Remote Transmitter..... 87
Trunk..... 90
Emergency Trunk Opener 91
Seats 92
Driver's Seat Power Adjustments 92
Front Seat Manual Adjustments 93
Driver's Seat Manual Height Adjustment 94
Armrest..... 94
Rear Seat Access 94
Head Restraints 96
Folding Rear Seat 99
Seat Heaters 101
Mirrors..... 102
Power Windows 104
Moonroof 108
Parking Brake 110
Interior Convenience Items..... 111
Glove Box 112
Beverage Holders..... 112
Console Compartment 113
Accessory Power Sockets..... 114
Sun Visor 115
Vanity Mirror 115
Sunglasses Holder 115
Coat Hook..... 116
Center Pocket 116
Interior Lights..... 117
Ceiling Light..... 117
Spotlights..... 118
Courtesy Lights 119

Control Locations

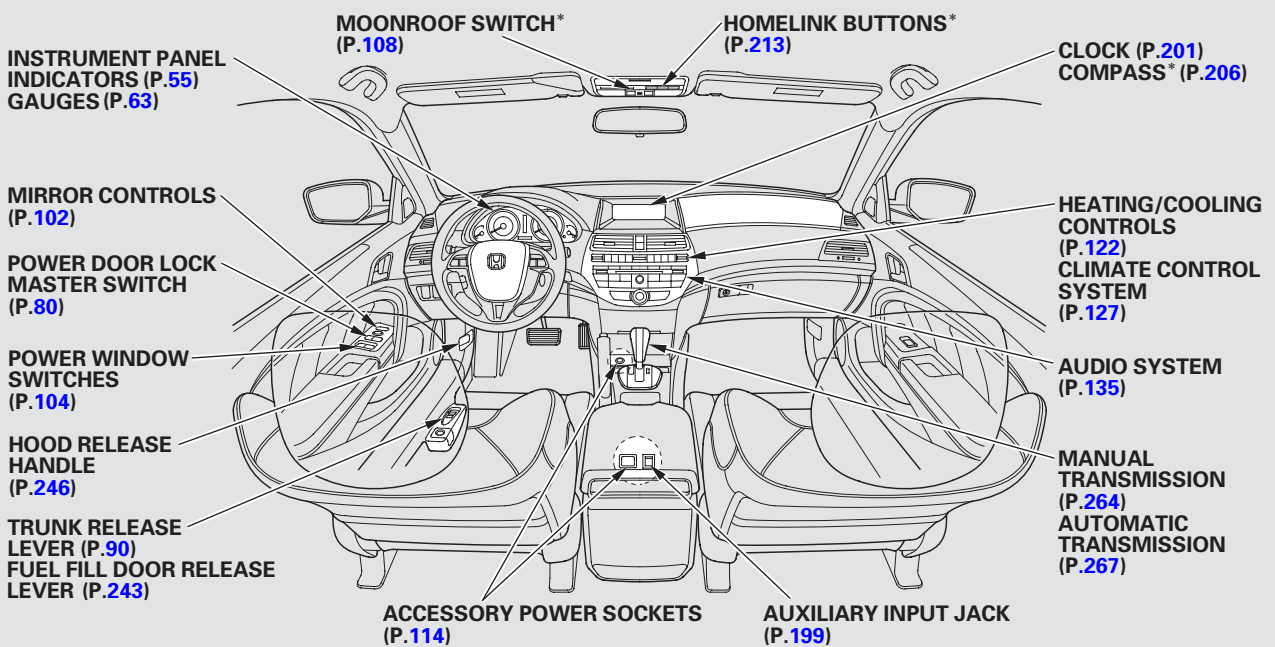

U.S. EX-L V6 model without navigation system (A/T) is shown.

*: If equipped

Instrument Panel

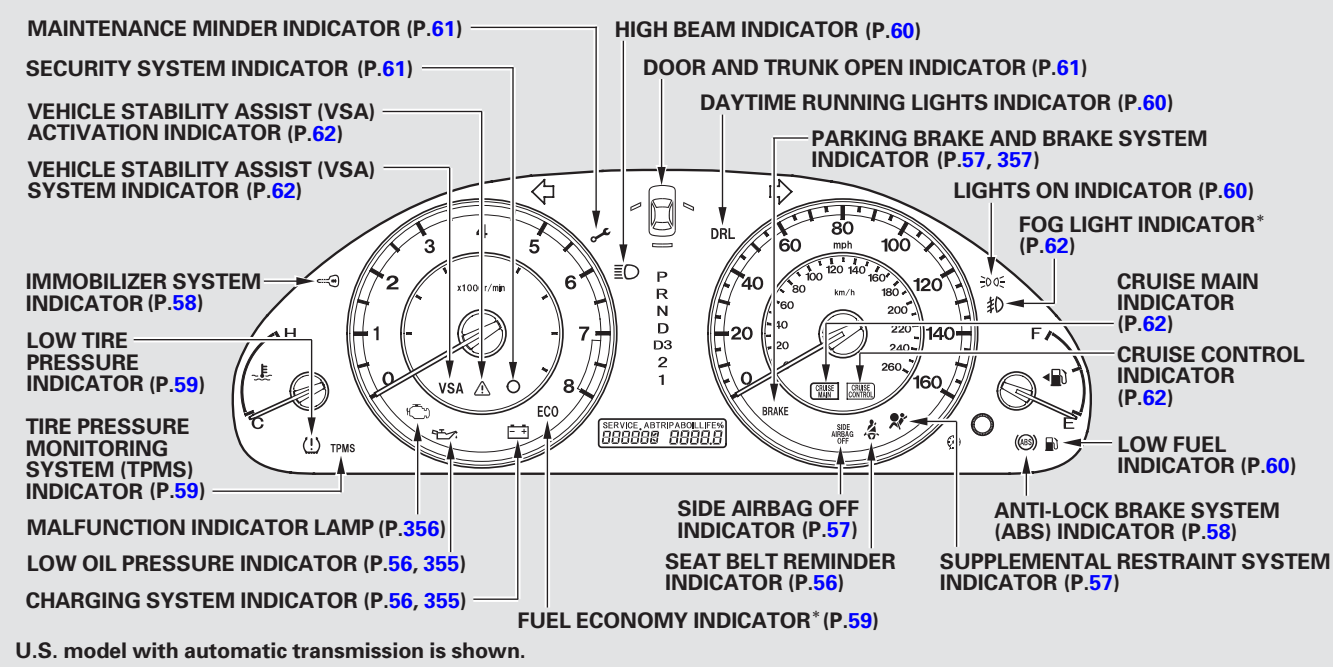

U.S. model with automatic transmission is shown.

The U.S. instrument panel is shown. Differences for the Canadian models are noted in the text.
* : If equipped

Instrument Panel Indicators

The instrument panel has many indicators to give you important information about your vehicle.

Seat Belt Reminder Indicator

This indicator comes on when you turn the ignition switch to the ON (II) position. It reminds you and your passengers to fasten your seat belts. A beeper also sounds if you have not fastened your seat belt.

If you turn the ignition switch to the ON (II) position before fastening your seat belt, the beeper sounds and the indicator flashes. If you do not fasten your seat belt before the beeper stops, the indicator stops flashing but remains on.

If your front passenger does not fasten their seat belt, the indicator comes on about 6 seconds after the ignition switch is turned to the ON (II) position.

If either of you do not fasten your seat belt while driving, the beeper will sound and the indicator will flash again at regular intervals. For more information, see page 17 .

Malfunction Indicator Lamp

See page 356 .

Low Oil Pressure Indicator

The engine can be severely damaged if this indicator flashes or stays on when the engine is running. For more information, see page 355 .

Charging System Indicator

If this indicator comes on when the engine is running, the battery is not being charged. For more information, see page 355 .

U.S. Canada

Parking Brake and Brake System Indicator

This indicator has two functions:

1. It comes on when you turn the ignition switch to the ON (II) position. It is a reminder to check the parking brake. A beeper sounds if you drive with the parking brake not fully released. Driving with the parking brake not fully released can damage the brakes and tires.

2. If it stays on after you have fully released the parking brake while the engine is running, or if it comes on while driving, there could be a problem with the brake system. For more information, see page 357 .

Supplemental Restraint System Indicator

This indicator comes on briefly when you turn the ignition switch to the ON (II) position. If it comes on at any other time, it indicates a potential problem with your front airbags. This indicator will also alert you to a potential problem with your side airbags, passenger's side airbag cutoff system, side curtain airbags, automatic seat belt tensioners, driver's seat position sensor, or the front passenger's weight sensors. For more information, see page 29 .

U.S. Canada

Side Airbag Off Indicator

This indicator comes on briefly when you turn the ignition switch to the ON (II) position. If it comes on at any other time, it indicates that the passenger's side airbag has automatically shut off. For more information, see page 30 .

Instrument Panel Indicators

Anti-lock Brake System (ABS) Indicator

This indicator normally comes on for a few seconds when you turn the ignition switch to the ON (II) position. If it comes on at any other time, there is a problem with the ABS. If this happens, have your vehicle checked at a dealer. With this indicator on, your vehicle still has normal braking ability but no anti-lock function. For more information, see page 274 .

Immobilizer System Indicator

This indicator comes on briefly when you turn the ignition switch to the ON (II) position. It will then go off if you have inserted a properly coded ignition key. If it is not a properly coded key, the indicator will blink, and the engine's fuel system will be disabled (see page 78).

Turn Signal and Hazard Warning Indicators

The left or right turn signal indicator blinks when you signal a lane change or turn. If an indicator does not blink or blinks rapidly, it usually means one of the turn signal bulbs is burned out (see pages 318 and 320). Replace the bulb as soon as possible, since other drivers cannot see that you are signaling.

When you press the hazard warning button, both turn signal indicators and all turn signals on the outside of the vehicle flash.

Low Tire Pressure Indicator

This indicator normally comes on for a few seconds when you turn the ignition switch to the ON (II) position. If it comes on while driving, it indicates that one or more of your vehicle's tires are significantly low on pressure.

If this happens, pull to the side of the road when it is safe, check which tire has lost the pressure, and determine the cause. If it is because of a flat tire, replace the flat tire with the compact spare (see page 343), and have the flat tire repaired as soon as possible. If two or more tires are underinflated, call a professional towing service (see page 365). For more information, see page 278 .

Tire Pressure Monitoring System (TPMS) Indicator

This indicator normally comes on for a few seconds when you turn the ignition switch to the ON (II) position.

If this indicator comes on and stays on at any other time, or if it does not come on when you turn the ignition switch to the ON (II) position, there is a problem with the TPMS. With this indicator on, the low tire pressure indicator will not come on when a tire loses pressure. Take the vehicle to your dealer to have the system checked.

Fuel Economy Indicator

V6 models with automatic transmission

While the engine is operating in its most economical range, this indicator may come on and stay on.

Instrument Panel Indicators

Daytime Running Lights Indicator

If this indicator comes on when you turn the ignition switch to the ON (II) position and release the parking brake, it means there is a problem with the DRL. There may also be a problem with the high beam headlights. Have your vehicle checked by your dealer.

High Beam Indicator

This indicator comes on with the high beam headlights. For more information, see page 70.

This indicator also comes on with reduced brightness when the daytime running lights (DRL) are on (see page 72).

Lights On Indicator

This indicator reminds you that the exterior lights are on. It comes on when the light switch is in either the or position. If you turn the ignition switch to the ACCESSORY (I) or LOCK (0) position without turning off the light switch, this indicator will stay on. A reminder chime will also sound when you open the driver's door.

EX-L and all V6 models
This indicator will also come on when the light switch is in AUTO and the lights turn on automatically.

Washer Level Indicator

Canadian models only
This indicator comes on when the washer fluid level is low. Add washer fluid when you see this indicator (see page 306).

Low Fuel Indicator

This indicator comes on as a reminder that you must refuel soon. When the indicator comes on, there are about 2.8 U.S. gal (10.5 ℓ) of fuel remaining in the tank.

When the needle reaches E, there is a very small amount of fuel in the tank.

Maintenance Minder Indicator

This indicator comes on for a few seconds when you turn the ignition switch to the ON (II) position. It reminds you that it is time to take your vehicle in for scheduled maintenance. The maintenance main items and sub items will be displayed in the information display. See page 291 for more information on the maintenance minder.

This indicator goes off when your dealer resets it after completing the required maintenance service.

Door and Trunk Open Indicator

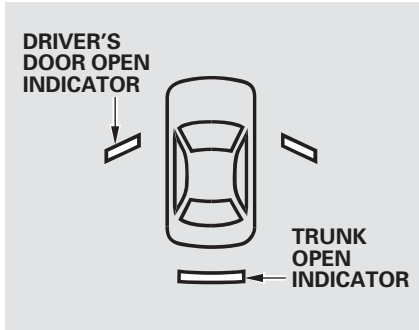

The appropriate indicator comes on if the trunk or either door is not closed tightly.

All the indicators come on for a few seconds when you turn the ignition switch to the ON (II) position.

Security System Indicator

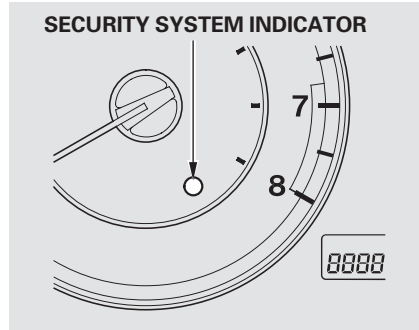

This indicator comes on when the security system is set. For more information, see page 204 .

Instrument Panel Indicators

VSA Vehicle Stability Assist (VSA) System Indicator

This indicator normally comes on for a few seconds when you turn the ignition switch to the ON (II) position.

If it comes on and stays on at any other time, or if it does not come on when you turn the ignition switch to the ON (II) position, there is a problem with the VSA system. Take your vehicle to a dealer to have it checked. Without VSA, your vehicle still has normal driving ability, but will not have VSA traction and stability enhancement. See page 276 for more information on the VSA system.

VSA Activation Indicator

This indicator has three functions:

1. It comes on as a reminder that you have turned off the vehicle stability assist (VSA) system.
2. It flashes when VSA is active (see page 276).
3. It comes on along with the VSA system indicator if there is a problem with the VSA system.

This indicator normally comes on for a few seconds when you turn the ignition switch to the ON (II) position. For more information, see page 276 .

CRUISE MAIN Cruise Main Indicator

This indicator comes on when you turn on the cruise control system by pressing the CRUISE button (see page 210).

CRUISE CONTROL Cruise Control Indicator

This indicator comes on when you set the cruise control. See page 210 for information on operating the cruise control.

Fog Light Indicator

If equipped

This indicator comes on when you turn on the fog lights. For more information, see page 73 .

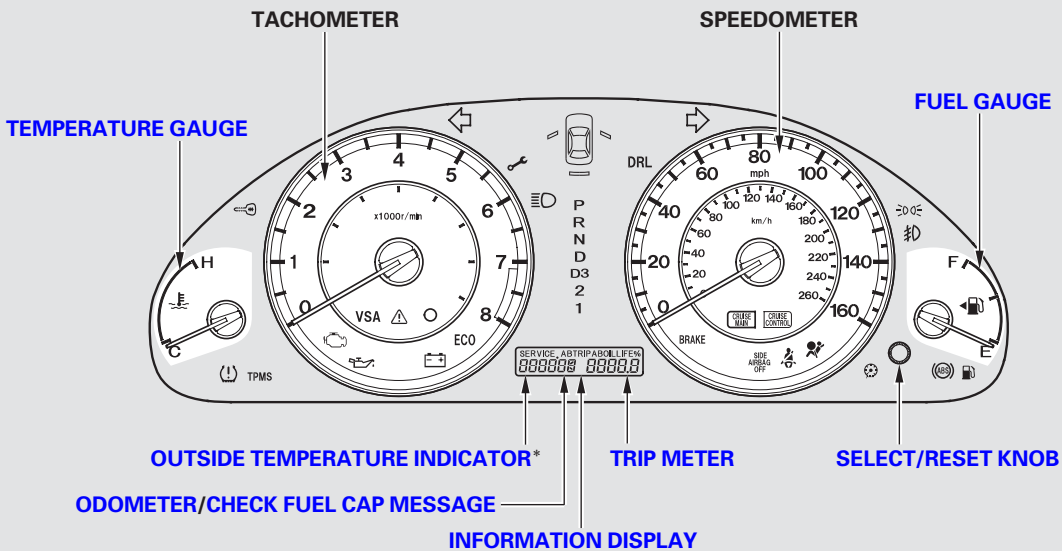

U.S. A/T model is shown.

*: If equipped

Gauges

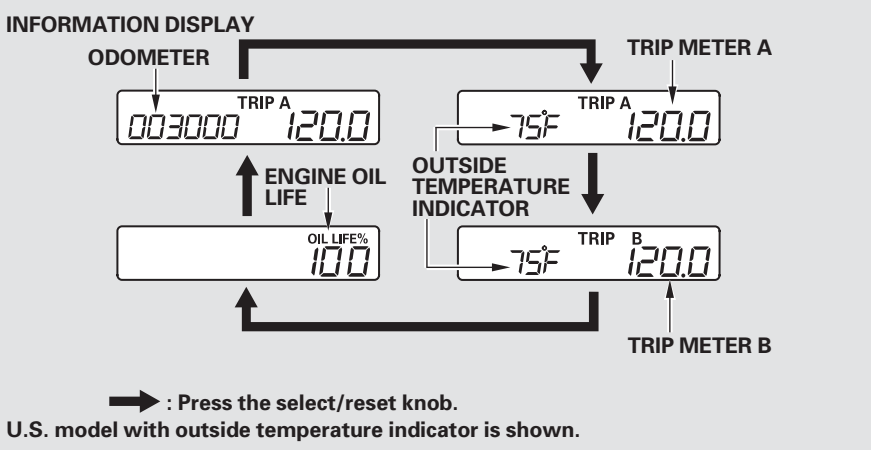

U.S. model with outside temperature indicator is shown.

Information Display

The information display shows the odometer, trip meter, engine oil life, outside temperature (if equipped), and maintenance item code(s).

To switch the display, press and release the select/reset knob repeatedly. When you turn the ignition switch to the ON (II) position, your last selection is displayed.

Odometer

The odometer shows the total distance your vehicle has been driven. It measures miles in U.S. models and kilometers in Canadian models. It is illegal under U.S. federal law and Canadian provincial/territorial regulations to disconnect, reset, or alter the odometer with the intent to change the number of miles or kilometers indicated.

Trip Meter
The trip meter shows the number of miles (U.S.) or kilometers (Canada) driven since you last reset it.

There are two trip meters: Trip A and Trip B. Switch between these displays by pressing the select/reset knob repeatedly.

Each trip meter works independently, so you can keep track of two different distances.

When you turn the ignition switch to the ON (II) position, your last selection is displayed.

To reset a trip meter, display it and then press and hold the select/reset knob until the number resets to “0.0”.

Fuel Gauge
This shows how much fuel you have. It may show slightly more or less than the actual amount. The needle returns to the bottom after you turn off the ignition.

NOTICE

Avoid driving with an extremely low fuel level. Running out of fuel could cause the engine to misfire, damaging the catalytic converter.

Temperature Gauge
This shows the temperature of the engine’s coolant. During normal operation, the pointer should rise from the bottom mark to about the middle of the gauge. In severe driving conditions, such as very hot weather or a long period of uphill driving, the pointer may rise to the upper zone. If it reaches the red (hot) mark, pull safely to the side of the road. Turn to page 353 for instructions and precautions on checking the engine cooling system.

Outside Temperature Indicator
If equipped
This indicator displays the outside temperature in Fahrenheit (U.S. models) or Celsius (Canadian models). To see the outside temperature, press and release the select/reset knob until the temperature is displayed.

The temperature sensor is in the front bumper. Therefore, the temperature reading can be affected by heat reflection from the road surface, engine heat, and the exhaust from surrounding traffic. This can cause an incorrect temperature reading when your speed is under 19 mph (30 km/h).

The sensor delays the display update until it reaches the correct outside temperature. This may take several minutes.

If the outside temperature is incorrectly displayed, you can adjust it up to ±5°F in U.S. models (±3°C in Canadian models) warmer or cooler.

NOTE: The temperature must be stabilized before doing this procedure.

Select the outside temperature display, then press and hold the select/reset knob for 10 seconds. The following sequence will appear for 1 second each: 0, 1, 2, 3, 4, 5, −5, −4, −3, −2, −1, 0 (U.S.) or 0, 1, 2, 3, −3, −2, −1, 0 (Canada).

When the temperature reaches the desired value, release the select/reset knob. You should see the new outside temperature displayed.

In certain weather conditions, temperature readings near freezing (32°F, 0°C) could mean that ice is forming on the road surface.

Check Fuel Cap Message
If your fuel fill cap is loose or missing, a “CHECK FUEL CAP” message appears on the information display after you start the engine. For more information, see page 245.

Maintenance Minder
The information display in the instrument panel shows you the engine oil life and maintenance service items when the ignition switch is in the ON (II) position. This information helps to keep you aware of the periodic maintenance your vehicle needs for continued trouble-free driving. Refer to page 291 for more information.

Controls Near the Steering Wheel

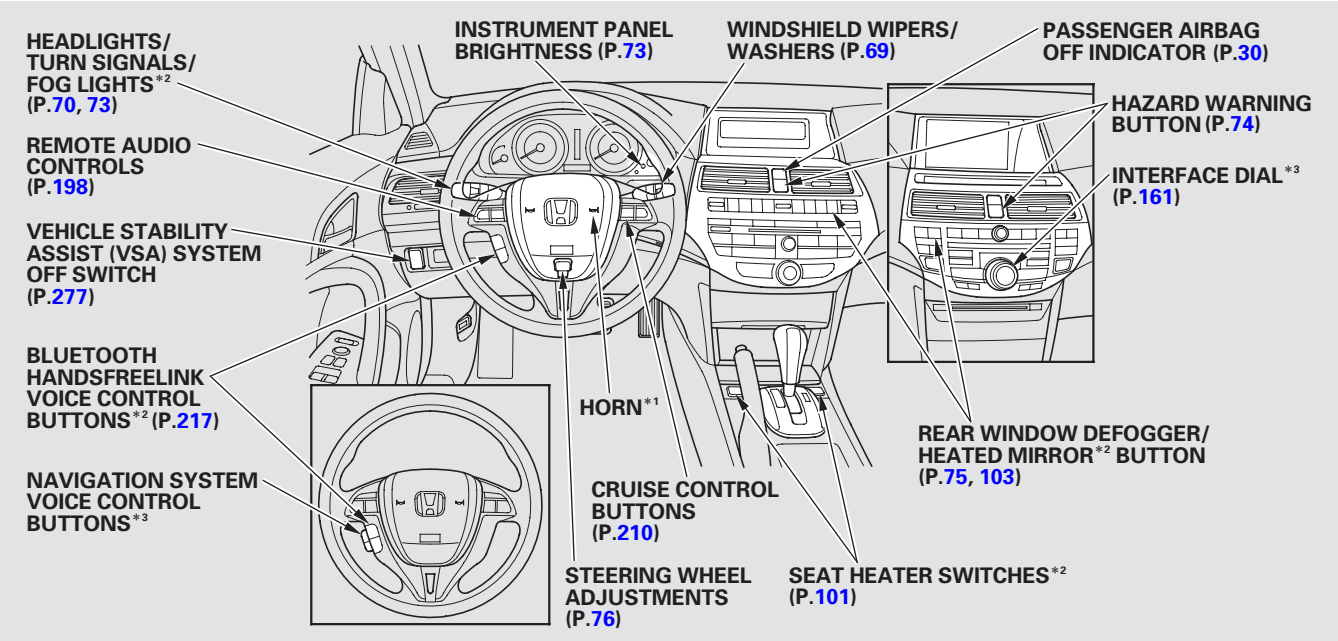

*1 : To use the horn, press the center pad of the steering wheel.
*2 : If equipped
*3 : Only on vehicles equipped with navigation system. Refer to the navigation system manual.

Windshield Wipers

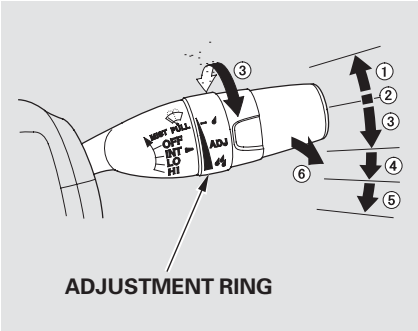

1. MIST
2. OFF
3. INT — Intermittent
4. LO — Low speed
5. HI — High speed
6. Windshield washers

Push the right lever up or down to select a position.

MIST — The wipers run at high speed until you release the lever.

OFF — The wipers are not activated.

INT — The length of the wiper interval is varied automatically according to the vehicle's speed.

Vary the delay by turning the adjustment ring. If you turn it to the shortest delay (position), the wipers change to low speed operation when the vehicle speed exceeds 12 mph (20 km/h).

LO — The wipers run at low speed.

HI — The wipers run at high speed.

Windshield Washer — Pull the wiper control lever toward you, and hold it. The washers spray until you release the lever. The wipers run at low speed, then complete a few more sweeps after you release the lever.

Turn Signals and Headlights

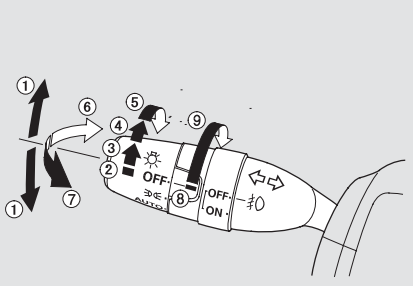

V6 model is shown.

1. Turn signal
2. Off
3. Parking and indicator lights
4. AUTO*
5. Headlights on
6. High beams
7. Flash high beams
8. Fog lights off*
9. Fog lights on*

*: If equipped

Turn Signal — Push down on the lever to signal a left turn and up to signal a right turn. To signal a lane change, push lightly on the lever, and hold it. The lever will return to center when you release it or complete a turn.

Headlights — Turning the switch to the " " position turns on the parking lights, taillights, instrument panel lights, side-marker lights, and rear license plate lights.

Turning the switch to the " " position turns on the headlights.

If you leave the lights on with the key removed from the ignition switch, you will hear a reminder chime when you open the driver's door.

When the light switch is in the " " or " " position, the lights on indicator comes on as a reminder. This indicator stays on if you leave the light switch on and turn the ignition switch to the ACCESSORY (I) or LOCK (0) position.

High Beams — Push the left lever forward until you hear a click. The blue high beam indicator will come on (see page 60). Pull the lever back to return to the low beams.

To flash the high beams, pull the lever back lightly, then release it. The high beams will stay on as long as you hold the lever back.

Headlights

EX-L and all V6 models
AUTO — The automatic lighting feature turns on the headlights and all other exterior lights, when it senses low ambient light.

To turn on automatic lighting, turn the light switch to AUTO. The lights will come on automatically when the outside light level becomes low (at dusk, for example). The lights on indicator comes on as a reminder. The lights and indicator will turn off automatically when the system senses high ambient light.

The lights will remain on when you turn off the ignition switch. They will turn off automatically when you remove the key and open the driver's door. To turn them on again, either turn the ignition switch to the ON (II) position or turn the light switch to the ≣D position.

Even with the automatic lighting feature turned on, we recommend that you turn on the lights manually when driving at night or in a dense fog, or when you enter dark areas such as long tunnels or parking facilities.

Do not leave the light switch in AUTO if you will not be driving the vehicle for an extended period (a week or more). You should also turn off the lights if you plan to leave the engine idling or off for a long time.

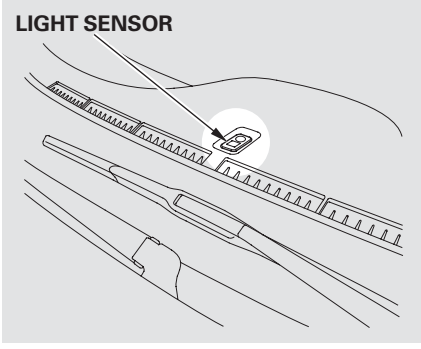

The automatic lighting feature is controlled by a sensor located on top of the dashboard. Do not cover this sensor or spill liquids on it.

Headlights

Automatic Lighting Off Feature
This feature turns off the headlights, all other exterior lights, and the instrument panel lights within 15 seconds after you remove the key and close the driver's door.

The automatic lighting off feature activates if you leave the headlight switch in the " " or " " position or if the lights are turned on by setting the switch in the "AUTO" position (if equipped), and you remove the key, then open and close the driver's door.

If you turn the ignition switch to the LOCK (0) position with the headlight switch on, but do not open the door, the lights turn off after 10 minutes (3 minutes, if the switch is in the "AUTO" position).

The lights will turn on again when you unlock or open the driver's door. If you unlock the door, but do not open it within 15 seconds, the lights will go off. With the driver's door open, you will hear a lights on reminder chime.

Daytime Running Lights
With the headlight switch off or in the position, the high beam headlights and the high beam indicator come on with reduced brightness when you turn the ignition switch to the ON (II) position and release the parking brake. They remain on until you turn the ignition switch off, even if you set the parking brake.

The headlights revert to normal operation when you turn them on with the switch.

Fog Lights, Instrument Panel Brightness

Fog Lights

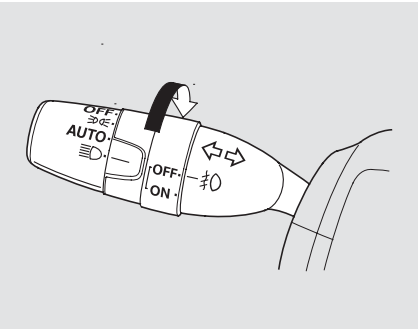

If equipped
Turn the fog lights on and off by turning the switch next to the headlight switch.

You can use the fog lights only when the headlights are on low beam. With the light switch in the AUTO position (if equipped), you can also use the fog lights when the headlights turn on automatically. They will go off when the headlights turn off, or the daytime running lights are on.

Instrument Panel Brightness

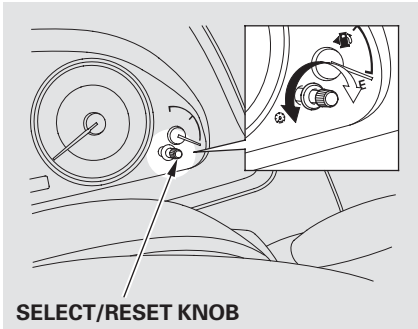

The select/reset knob on the instrument panel controls the brightness of the instrument panel lights. Turn the knob to adjust the brightness with the ignition switch in the ON (II) position and the parking lights on.

CONTINUED

Instrument Panel Brightness, Hazard Warning Button

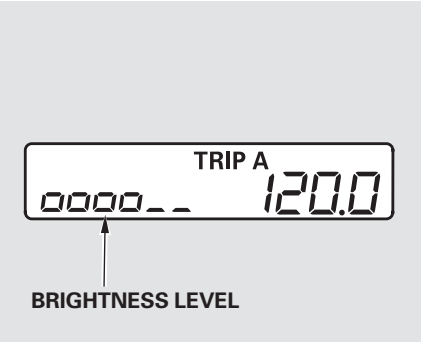

The level of brightness is shown on the information display while you adjust it. It goes out about 5 seconds after you finish adjusting.

To reduce glare at night, the instrument panel illumination dims when you turn the light switch to ≡DOC or ≡D . Turning the select/reset knob to the right until you hear a beep will cancel the reduced brightness.

The instrument panel will illuminate with reduced brightness when you unlock and open the driver's door. The brightness will increase slightly when you insert the key in the ignition switch, then go to normal brightness when you turn the ignition switch to the ON (II) position.

If you do not insert the key in the ignition switch after opening the driver's door, the illumination turns off about 30 seconds after you close the door.

If you insert the key but do not turn the ignition switch to the ON (II) position, the illumination turns off in about 10 seconds.

Hazard Warning Button

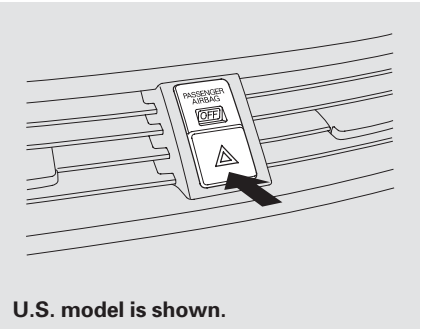

U.S. model is shown.

Push the button between the center vents to turn on the hazard warning lights (four-way flashers). This causes all four outside turn signals and both turn indicators in the instrument panel to flash. Use the hazard warning lights if you need to park in a dangerous area near heavy traffic, or if your vehicle is disabled.

Rear Window Defogger

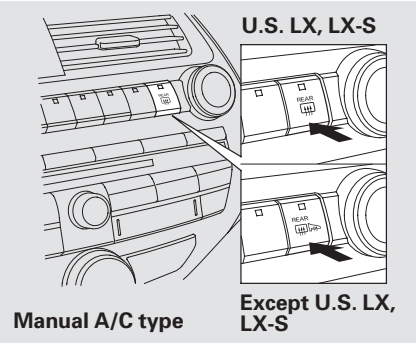

The rear window defogger will clear fog, frost, and thin ice from the window. Push the defogger button to turn it on and off. The indicator in the button comes on to show the defogger is on. It also shuts off when you turn off the ignition switch. You have to turn the defogger on again when you restart the vehicle.

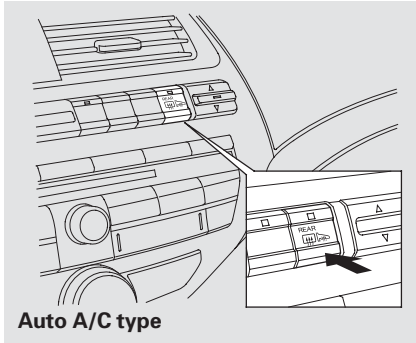

On vehicles with automatic air conditioning system
The defogger will shut itself off within about 10 to 30 minutes according to the outside temperature (over 32°F, 0°C).

Make sure the rear window is clear and you have good visibility before starting to drive.

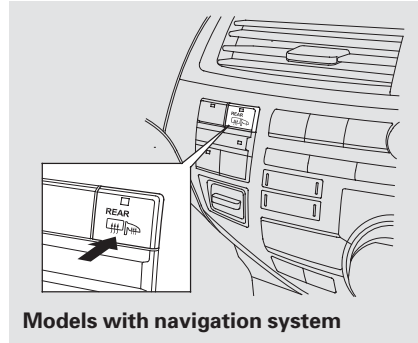

The defogger and antenna wires on the inside of the rear window can be accidentally damaged. When cleaning the glass, always wipe side to side.

Except U.S. LX and LX-S
Pushing this button also turns the mirror heaters on or off. For more information, see page 103 .

Steering Wheel Adjustments

Make any steering wheel adjustments before you start driving.

⚠ WARNING

Adjusting the steering wheel position while driving may cause you to lose control of the vehicle and be seriously injured in a crash.

Adjust the steering wheel only when the vehicle is stopped.

1. Push the lever under the steering column all the way down.

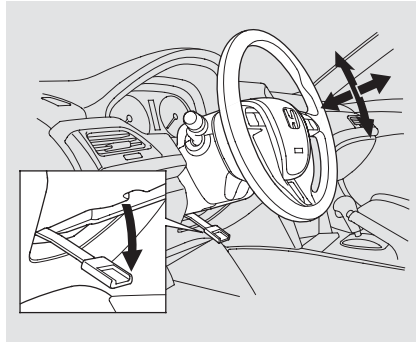

2. Move the steering wheel up or down, and in or out, so it points toward your chest, not toward your face. Make sure you can see the instrument panel gauges and indicators.

3. Push the lever up to lock the steering wheel in position.

4. Make sure you have securely locked the steering wheel in place by trying to move it up, down, in, and out.

Keys and Locks

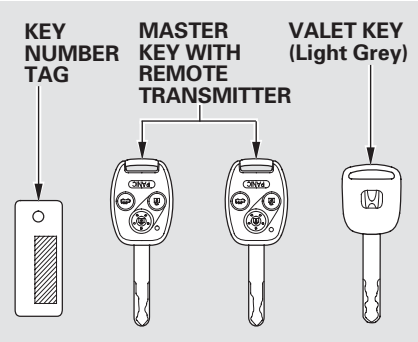

The master key fits all the locks on your vehicle. The valet key works only in the ignition and the driver's door lock. You can keep the trunk release handle, and glove box locked when you leave your vehicle and the valet key at a parking facility.

You should have received a key number tag with your keys. You will need this key number if you ever have to get a lost key replaced. Use only Honda-approved key blanks.

These keys contain electronic circuits that are activated by the immobilizer system. They will not work to start the engine if the circuits are damaged.

- Protect the keys from direct sunlight, high temperature, and high humidity.
- Do not drop the keys or set heavy objects on them.
- Keep the keys away from liquids. If they get wet, dry them immediately with a soft cloth.

The valet key does not contain a battery. Do not try to take it apart.

Immobilizer System

The immobilizer system protects your vehicle from theft. If an improperly coded key (or other device) is used, the engine's fuel system is disabled.

When you turn the ignition switch to the ON (II) position, the immobilizer system indicator should come on briefly, then go off. If the indicator starts to blink, it means the system does not recognize the coding of the key. Turn the ignition switch to the LOCK (0) position, remove the key, reinsert it, and turn the ignition switch to the ON (II) position again.

The system may not recognize your key's coding if another immobilizer key or other metal object (i.e. key chain) is near the ignition switch when you insert the key.

If the system repeatedly does not recognize the coding of your key, contact your dealer.

Do not attempt to alter this system or add other devices to it. Electrical problems could result that may make your vehicle inoperable.

If you lose your key and you cannot start the engine, contact your dealer.

NOTICE

Always take the ignition key with you whenever you leave the vehicle alone.

As required by the FCC:
This device complies with Part 15 of the FCC rules. Operation is subject to the following two conditions: (1) This device may not cause harmful interference, and (2) this device must accept any interference received, including interference that may cause undesired operation.

Changes or modifications not expressly approved by the party responsible for compliance could void the user's authority to operate the equipment.

This device complies with Industry Canada Standard RSS-210.
Operation is subject to the following two conditions: (1) this device may not cause interference, and (2) this device must accept any interference that may cause undesired operation of the device.

Ignition Switch

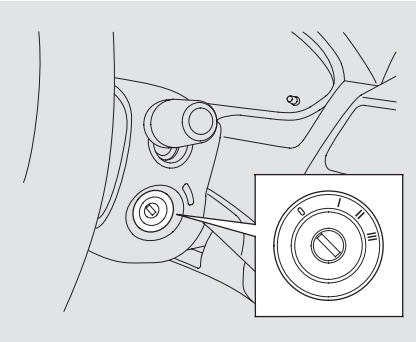

The ignition switch has four positions: LOCK (0), ACCESSORY (I), ON (II), START (III)

LOCK (0) — You can insert or remove the key only in this position. To turn the key, push it in slightly. If your vehicle has an automatic transmission, the shift lever must also be in Park.

If the front wheels are turned, the anti-theft lock may make it difficult to turn the key. Firmly turn the steering wheel to the left or right as you turn the key.

ACCESSORY (I) — You can operate the audio system and the accessory power sockets in this position.

ON (II) — This is the normal key position when driving. Several of the indicators on the instrument panel come on as a test when you turn the ignition switch from the ACCESSORY (I) to the ON (II) position.

START (III) — Use this position only to start the engine. The switch returns to the ON (II) position when you let go of the key.

You will hear a reminder beeper if you leave the key in the ignition switch in the LOCK (0) or the ACCESSORY (I) position and open the driver's door. Remove the key to turn off the beeper.

If your vehicle has an automatic transmission, the shift lever must be in Park before you can remove the key from the ignition switch.

⚠ WARNING

Removing the key from the ignition switch while driving locks the steering. This can cause you to lose control of the vehicle.

Remove the key from the ignition switch only when parked.

Door Locks

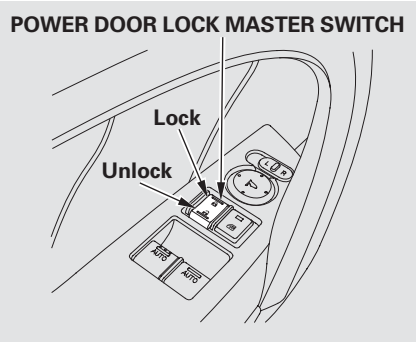

To lock both doors, push the front of the master door lock switch on either door, pull the lock tab rearward on the driver's door, or use the key on the outside lock on the driver's door.

Pushing the rear of either master door lock switch will unlock both doors.
Pushing forward the lock tab on the driver's door only unlocks that door.

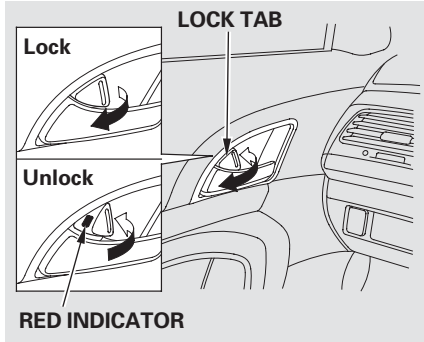

The lock tab on the passenger's door locks and unlocks that door.

When the door is unlocked, you can see the red indicator on the lock tab above the inner door handle.

Both doors can be locked from the outside by using the key in the driver's door. To unlock only the driver's door, insert the key, turn it clockwise, and release it. The passenger's door unlocks when you turn the key a second time within a few seconds.

You can open or close the windows and the moonroof (if equipped) by using the key in the driver's door (see page 106).

To lock the passenger's door when getting out of the vehicle, pull the lock tab rearward and close the door. To lock the driver's door, remove the key from the ignition switch, pull the lock tab rearward or push the front of the master switch, then close the door.

Lockout Prevention
If you forget and leave the key in the ignition switch, lockout prevention will not allow you to lock the driver's door. With either door open and the key in the ignition switch, locking with the master door lock switch is disabled. If the driver's door is closed, the lock tab on the driver's door is not disabled. Pulling the driver's lock tab rearward will lock both doors. If you try to lock an open driver's door by pulling the lock tab rearward, the driver's door lock tab pops out and unlocks the driver's door.

Auto Door Locking/Unlocking
Your vehicle has customizable settings for the doors to automatically lock and unlock. There are default settings for each of these features. You can turn off or change the settings for these features as described on the following pages.

When you customize the setting, make sure your vehicle is parked safely, the engine is off, and the parking brake is applied. Make all settings before you start driving.

Auto Door Locking
The auto door locking feature has three possible settings:

- The auto door locking is deactivated all the time.
- The doors lock whenever you move the shift lever out of the Park (P) position (A/T vehicles).
- The doors lock when the vehicle speed reaches 9 mph (15 km/h). This is the default setting.

CONTINUED

Door Locks

To turn off the Auto Door Lock modes:

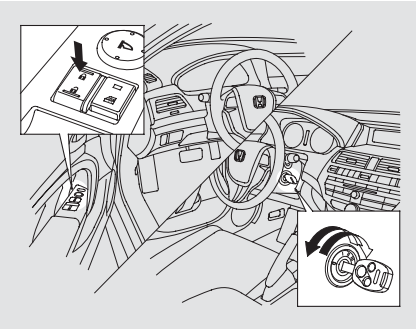

1. Make sure the shift lever is in the Park (P) position (A/T vehicles).

2. Turn the ignition switch to the ON (II) position, and open the driver's door.

3. Push and hold the front of the master door lock switch on the driver's door until you hear a click (after about 5 seconds).

4. Release the switch, and within 5 seconds, turn the ignition switch to the LOCK (0) position.

To program the Park Lock mode:
Locks both doors when the shift lever is moved out of the Park (P) position (A/T vehicles only).

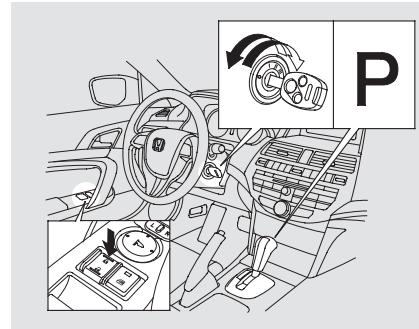

1. Make sure the shift lever is in the Park (P) position.

2. Turn the ignition switch to the ON (II) position, and make sure to close the driver's door.

3. Push and hold the front of the master door lock switch on the driver's door. You will hear a click. Keep holding the switch until you hear another click (after about 5 seconds).

4. Release the switch, and within 5 seconds, turn the ignition switch to the LOCK (0) position.

To program the Drive Lock mode:
Locks both doors when the vehicle's speed reaches about 9 mph (15 km/h).

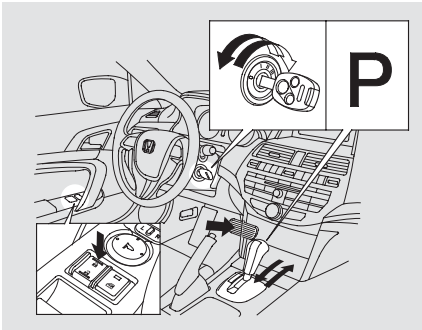

1. Make sure the shift lever is in the Park (P) position (A/T vehicles).

2. Turn the ignition switch to the ON (II) position, and make sure to close the driver's door.

3. *On A/T vehicles,* push and hold the brake pedal, and move the shift lever out of the Park (P) position.

4. Push and hold the front of the master door lock switch on the driver's door. You will hear a click. Keep holding the switch until you hear another click (after about 5 seconds).

5. Release the switch, and within 5 seconds, turn the ignition switch to the ACCESSORY (I) position. *On A/T vehicles,* move the shift lever to the Park (P) position.

6. Turn the ignition switch to the LOCK (0) position.

Door Locks

Auto Door Unlocking
The auto door unlocking feature has five possible settings:

- The auto door unlocking is deactivated all the time.
- *On A/T vehicles,* the driver's door unlocks when you move the shift lever to the Park (P) position with the brake pedal depressed.
  This is the default setting.
- Both doors unlock when you move the shift lever to the Park (P) position with the brake pedal depressed (A/T vehicles).
- The driver's door unlocks whenever you turn the ignition switch to the ACCESSORY (I) position.
  This is the default setting on M/T vehicles.
- Both doors unlock whenever you turn the ignition switch to the ACCESSORY (I) position.

To turn off the Auto Door Unlock modes:

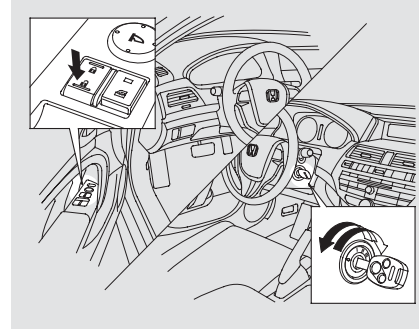

1. Make sure the shift lever is in the Park (P) position (A/T vehicles).
2. Turn the ignition switch to the ON (II) position, and open the driver's door.

3. Push and hold the rear of the master door lock switch on the driver's door. You will hear a click, and after about 5 seconds, you will hear another click.

4. Release the switch, and within 5 seconds, turn the ignition switch to the LOCK (0) position.

To program the Park Unlock mode: *Unlocks the driver's door or both doors when the shift lever is moved into the Park (P) position with the brake pedal depressed (A/T vehicles only).*

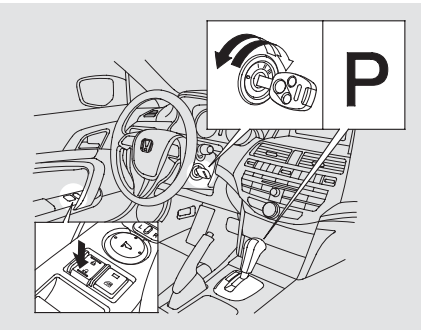

1. Make sure the shift lever is in the Park (P) position.

2. Turn the ignition switch to the ON (II) position, and make sure to close the driver's door.

3. Push and hold the rear of the master door lock switch on the driver's door. You will hear a click. Continue to hold the switch:

   - Until you hear another click (after about 5 seconds) to activate *driver's door unlock feature.*

   - Or, until you hear two more clicks (after about 10 seconds) to activate *both doors unlock feature.*

4. Release the switch, and within 5 seconds, turn the ignition switch to the LOCK (0) position.

CONTINUED

Door Locks

To program the Ignition Switch Unlock mode:
Unlocks the driver's door or both doors when the ignition switch is moved out of the ON (II) position.

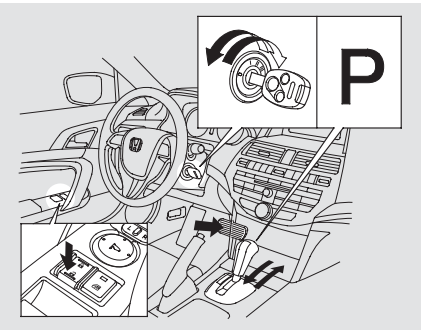

1. Make sure the shift lever is in the Park (P) position (A/T vehicles).

2. Turn the ignition switch to the ON (II) position, and make sure to close the driver's door.

3. *On A/T vehicles,* push and hold the brake pedal, then move the shift lever out of the Park (P) position.

4. Push and hold the rear of the master door lock switch on the driver's door. You will hear a click. Continue to hold the switch:

   - Until you hear another click (after about 5 seconds) to activate *driver's door unlock feature.*

   - Or, until you hear two more clicks (after about 10 seconds) to activate *both doors unlock feature.*

5. Release the switch, and within 5 seconds, turn the ignition switch to the ACCESSORY (I) position. *On A/T vehicles,* move the shift lever to the Park (P) position.

6. Turn the ignition switch to the LOCK (0) position.

Even if your vehicle's battery is removed or goes dead, the system keeps the auto door lock/unlock setting which you selected.

Remote Transmitter

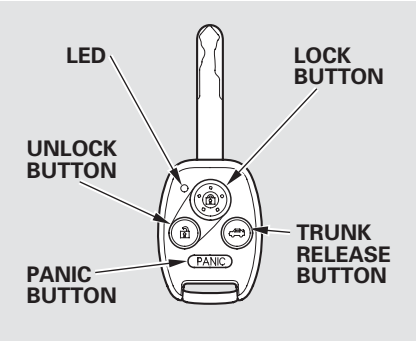

LOCK — Press this button once to lock both doors. Some exterior lights will flash once. When you push LOCK twice within 5 seconds, you will hear a beep to verify that the doors are locked and that the security system has set. You cannot lock the doors if either door is not fully closed or the key is in the ignition switch.

UNLOCK — Press this button once to unlock the driver's door. Push it twice to unlock the passenger's door. Some exterior lights will flash twice each time you push the button.

The ceiling light and the door activated spotlights (if equipped) come on when you press the UNLOCK button if the lights are in the door activated position. If you do not open either door within 30 seconds, the light(s) will fade out. If you relock the doors with the remote transmitter before 30 seconds have elapsed, the light(s) will go off immediately.

If you do not open either door within 30 seconds, the doors automatically relock and the security system sets.

You can also open both power windows and the moonroof (if equipped) from outside the vehicle with the remote transmitter (see page 106).

PANIC — Press and hold this button for about 2 seconds to attract attention: the horn will sound and the exterior lights will flash for about 30 seconds. To cancel panic mode, press any other button on the remote transmitter, or turn the ignition switch to the ON (II) position.

TRUNK — Press and hold this button for about 1 second to open the trunk. You cannot open the trunk if the key is in the ignition switch.

CONTINUED

Remote Transmitter

Remote Transmitter Care

- Avoid dropping or throwing the transmitter.
- Protect the transmitter from extreme temperature.
- Do not immerse the transmitter in any liquid.
- If you lose a transmitter, the replacement needs to be reprogrammed by your dealer.

Replacing the Transmitter Battery

If it takes several pushes on the button to lock or unlock the doors, replace the battery as soon as possible.

Battery type: CR1616

To replace the battery:

1. Remove the screw at the base of the transmitter with a small Phillips-head screwdriver.

NOTE: Be careful when removing this screw as the head of the screw can strip out.

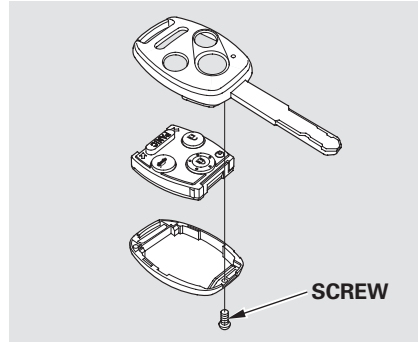

2. Separate the transmitter by prying its middle seam with your fingernail.

Remote Transmitter

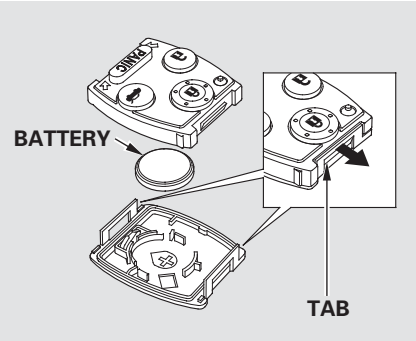

3. Inside the transmitter, separate the inner cover from the keypad by releasing the two tabs on the cover.

4. Remove the old battery, and insert a new battery into the back of the cover with the + side facing down.

   An improperly disposed of battery can hurt the environment. Always confirm local regulations for battery disposal.

5. Install the parts in reverse order.

As required by the FCC:
This device complies with Part 15 of the FCC rules. Operation is subject to the following two conditions: (1) This device may not cause harmful interference, and (2) this device must accept any interference received, including interference that may cause undesired operation.

Changes or modifications not expressly approved by the party responsible for compliance could void the user's authority to operate the equipment.

This device complies with Industry Canada Standard RSS-210.
Operation is subject to the following two conditions: (1) this device may not cause interference, and (2) this device must accept any interference that may cause undesired operation of the device.

Trunk

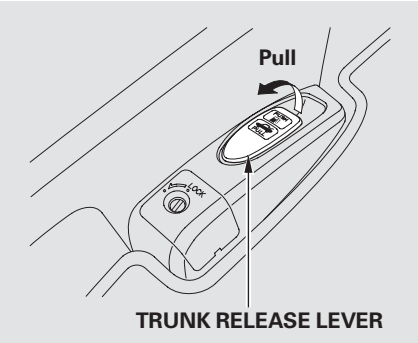

TRUNK RELEASE LEVER

You can open the trunk in two ways:

- Pull up on the trunk release lever to the left of the driver's seat.
- Press and hold the trunk release button on the remote transmitter.

To close the trunk, press down on the trunk lid.

Keep the trunk lid closed at all times while driving to avoid damaging the lid, and to prevent exhaust gas from getting into the interior. See **Carbon Monoxide Hazard** on page 51.

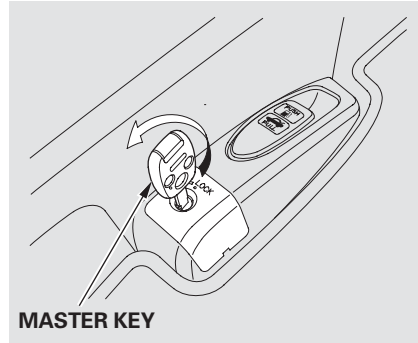

MASTER KEY

To protect items in the trunk when you need to give the key to someone else:

1. Lock the trunk release lever with the master key.
2. Give the person the valet key.

Even if the trunk release lever is locked with the master key, you can open the trunk with the remote transmitter.

Emergency Trunk Opener

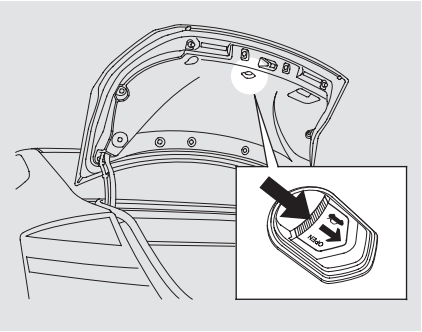

As a safety feature, your vehicle has a release lever on the trunk latch so the trunk can be opened from the inside.

To open the trunk, push the release lever in the direction indicated by the arrow.

Parents should decide if their children should be shown how to use this feature.

For more information about child safety, see page 37 .

Seats

Driver's Seat Power Adjustments

Except LX, LX-S and EX

See pages 11 – 13 for important safety information and warnings about how to properly position the seats and seat-backs.

The controls for the power adjustable driver's seat are on the outside edge of the seat bottom. You can adjust the seat with the ignition switch in any position. Make all seat adjustments before you start driving.

The front passenger's seat adjusts manually.

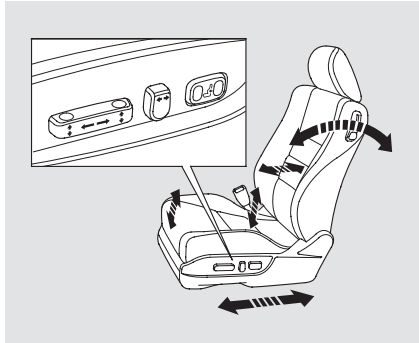

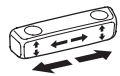

Moves the seat forward and backward.

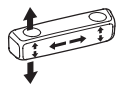

Moves the front of the seat up or down.

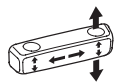

Raises or lowers the seat.

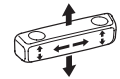

Moves the whole seat up and forward, or down and backward. The front of the seat also tilts up or down at the same time.

Adjusts the seat-back angle forward or backward.

Increases or decreases the lumbar support.

Front Seat Manual Adjustments

See pages 11 — 13 for important safety information and warnings about how to properly position the seats and seat-backs.

Make all seat adjustments before you start driving.

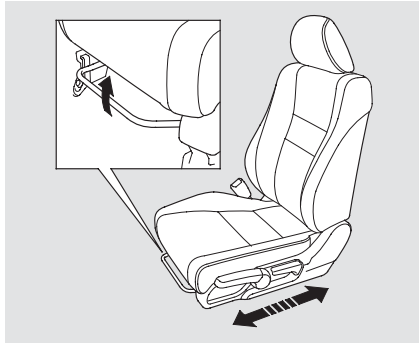

To adjust the seat forward or backward, pull up on the bar under the seat cushion's front edge. Move the seat to the desired position, and release the bar. Try to move the seat to make sure it is locked in position.

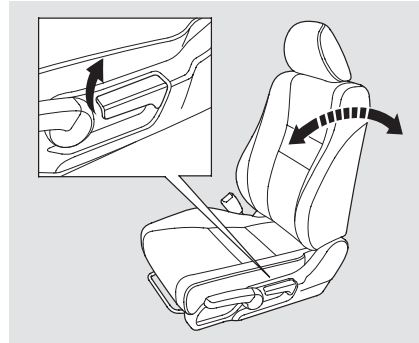

To change the seat-back angle, pull up on the lever on the outside of the seat bottom.

Once a seat is adjusted correctly, rock it back and forth to make sure it is locked in position.

Driver's Seat Manual Height Adjustment

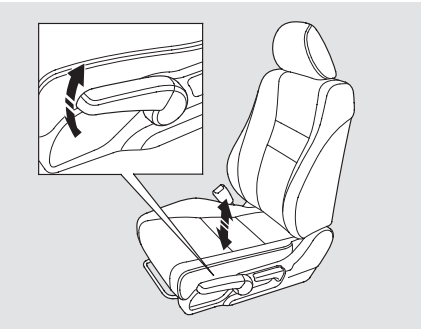

LX, LX-S and EX models
The height of your driver's seat is adjustable. To raise the seat, repeatedly pull up the lever on the outside of the seat cushion. To lower the seat, push the lever down repeatedly.

Make all seat adjustments before you start driving.

Armrest

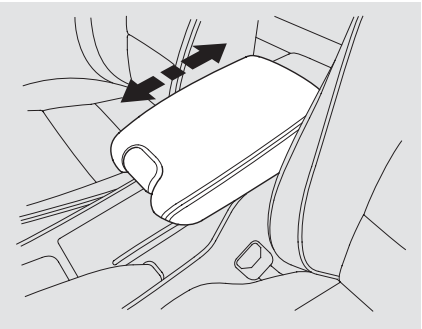

To use the console lid as an armrest, slide it to one of its three positions.

Rear Seat Access

Driver's Side

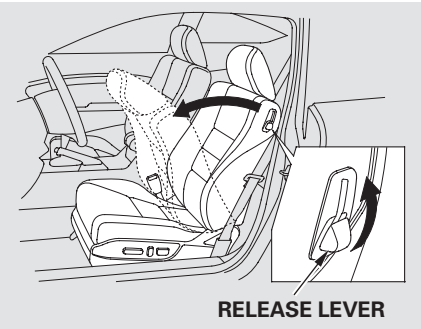

On all V6 models and 4-cylinder EX-L model
To get into the rear seat on the driver's side, open the door and pull the release lever up on the side of the seat-back. The seat-back will tilt forward to allow easier entry to the rear seat.

NOTICE

To avoid damaging the seat-back angle adjustment motor, do not operate the seat-back angle switch when the seat-back is tilted forward.

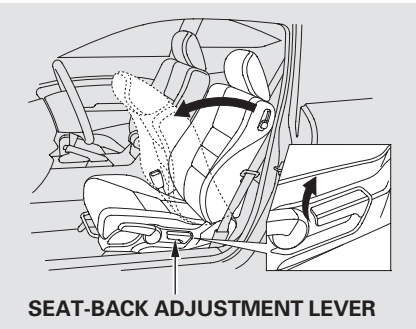

LX, LX-S and EX models
To get into the rear seat on the driver's side, open the door and pull up on the seat-back adjustment lever. The seat-back will tilt forward to allow easier entry to the rear seat.

Passenger's Side

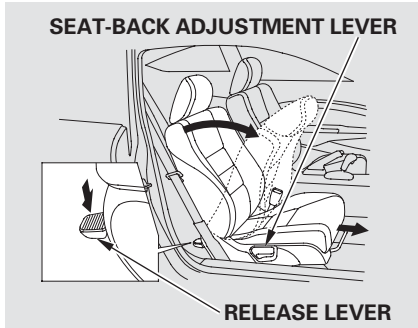

To get into the rear seat on the passenger's side, push downward on the release lever at the base of the seat-back, or pull up on the seat-back adjustment lever. The seat-back will tilt forward and the entire seat will move forward to allow easier entry to the rear seat.

After a passenger gets into the rear seat, push the seat-back to the upright position and push the whole seat backwards until it latches. Make sure the seat is fully latched before sitting in it.

Head Restraints

See page 13 for important safety information and a warning about improperly positioning head restraints.

Your vehicle is equipped with head restraints in all seating positions to help protect you and your passengers from the likelihood of whiplash and other injuries.

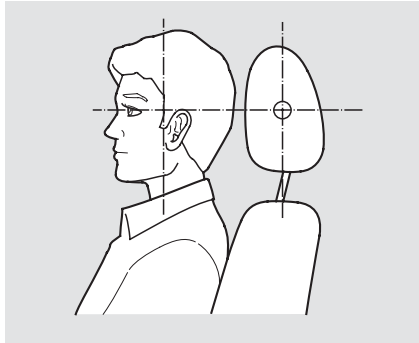

They are most effective when you adjust them so the center of the back of the occupant's head rests against the center of the restraint.

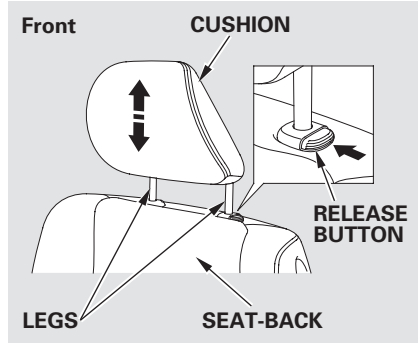

Adjusting the Head Restraint

The head restraints adjust for height. You need both hands to adjust a restraint. Do not attempt to adjust it while driving. To raise it, pull upward. To lower the restraint, push the release button sideways, and push the restraint down.

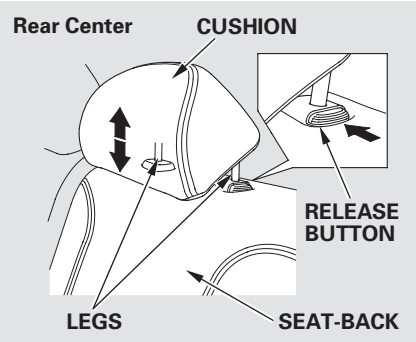

Removing the Head Restraint
To remove a head restraint for cleaning or repair, pull it up as far as it will go. Push the release button, then pull the restraint out of the seat-back.

⚠ WARNING

Failure to reinstall the head restraints can result in severe injury during a crash.

Always replace the head restraints before driving.

When reinstalling a head restraint, put the legs back in place. Then adjust it to the appropriate height while pressing the release button.

Make sure the head restraint locks in position when you reinstall it.

CONTINUED

Active Head Restraints

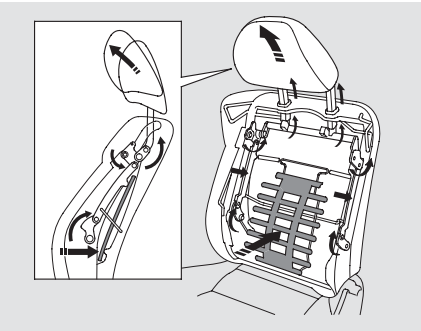

The driver's and front passenger's seats have active head restraints. If the vehicle is struck severely from the rear, the occupant properly secured with the seat belt will be pushed against the seat-back and the head restraint will automatically move forward.

This reduces the distance between the restraint and the occupant's head. It also helps protect the occupants against the likelihood of whiplash and injuries to the neck and upper spine.

After a collision, the activated restraint should return to its normal position.

If the restraints do not return to their normal position, or in the event of a severe collision, have the vehicle inspected by a Honda dealer.

For a head restraint system to work properly:

- Do not hang any items on the head restraints, or from the restraint legs.
- Do not place any object between an occupant and the seat-back.
- Install each restraint in its proper location.
- Only use genuine Honda replacement head restraints.

Folding Rear Seat
The back of the rear seat folds down, giving you direct access to the trunk. The seat-back is released from inside the trunk.

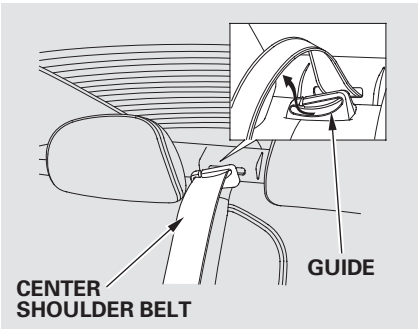

When storing cargo, you can move the rear center shoulder belt out of the way by removing the belt from the guide.

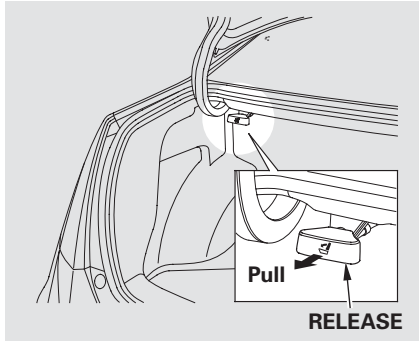

To release the seat-back from inside the trunk, pull the release under the trunk panel. Push the seat-back down from inside the trunk, or pull the seat-back down from inside the vehicle.

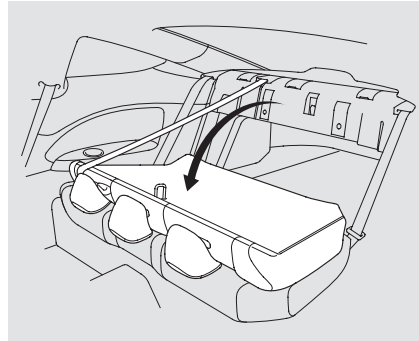

Remove any items from the seat before you fold down the seat-back.

CONTINUED

Make sure that the folded seat-back does not press against the front passenger's seat, as this could cause the weight sensors to work improperly.

To lock the seat-back upright, push it firmly against the trunk panel. Make sure it is latched in place by pulling on the top of the seat.

If the rear head restraints get caught on the front seat backs and you cannot fold down the rear seat-back fully, you can remove the head restraints (see page 97).
Make sure the removed head restraints are securely stored.

Make sure all rear shoulder belts are positioned in front of the rear seat-back, and the center shoulder belt is re-positioned in the guide whenever the seat-back is in its upright position. Be sure there are no twists in any shoulder belt.

Do not put any heavy items on the seat-back when it is folded down.

Make sure all items in the trunk, or items extending through the opening into the back seat, are secured. Loose items can fly forward and cause injury if you have to brake hard. See **Carrying Cargo** on page 255 .

Never drive with the seat-back folded down and the trunk lid open. See **Carbon Monoxide Hazard** on page 51.

Seat Heaters

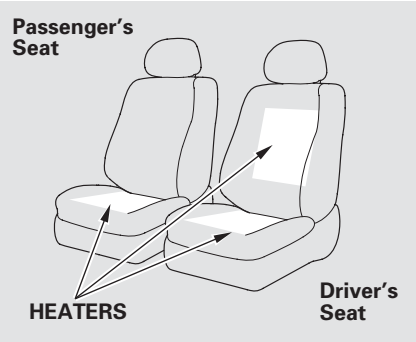

EX-L and all V6 models
Both front seats are equipped with seat heaters. Because of the sensors for the side airbag cutoff system, there is no heater in the passenger's seat-back. The ignition switch must be in the ON (II) position to use the heaters.

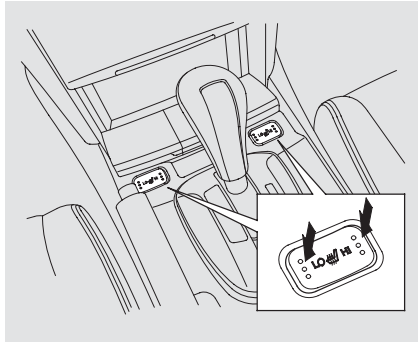

Push the right side of the switch, HI, to rapidly heat up the seat. After the seat reaches a comfortable temperature, select LO by pushing the left side of the switch. This will keep the seat warm.

In the HI setting, the heater turns off when the seat gets warm, and turns back on after the seat's temperature drops.

In the LO setting, the heater runs continuously. It does not cycle with temperature changes.

Follow these precautions whenever you use the seat heaters:

- Use the HI setting only to heat the seats quickly, because it draws large amounts of current from the battery.
- If the engine is left idling for an extended period, do not use the seat heaters even on the LO setting. It can weaken the battery, causing hard starting.

Mirrors

Keep the inside and outside mirrors clean and adjusted for best visibility. Be sure to adjust the mirrors before you start driving.

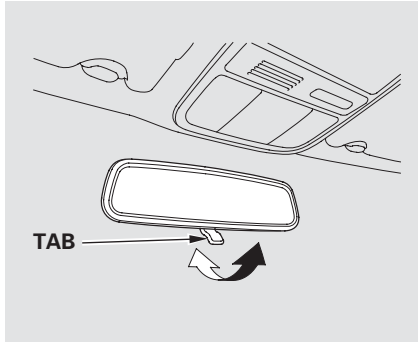

The inside mirror has day and night positions. The night position reduces glare from headlights behind you. Flip the tab on the bottom edge of the mirror to select the day or night position.

Adjusting the Power Mirrors

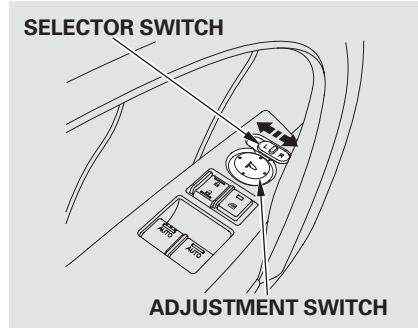

1. Turn the ignition switch to the ON (II) position.
2. Move the selector switch to L (driver's side) or R (passenger's side).

3. Push the appropriate edge of the adjustment switch to move the mirror right, left, up, or down.

4. When you finish, move the selector switch to the center (off) position. This turns the adjustment switch off to keep your settings.

Power Mirror Heaters

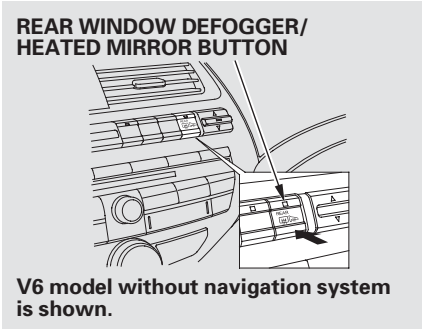

V6 model without navigation system is shown.

U.S. EX, EX-L and all V6 models
All Canadian models
The outside mirrors are heated to remove fog and frost. With the ignition switch in the ON (II) position, turn on the heaters by pressing the button. The indicator in the button comes on as a reminder. Press the button again to turn the heaters off. Pressing this button also turns the rear window defogger on and off.

On vehicles with automatic air conditioning system
This heated mirror function has a timer (see page 75).

Power Windows

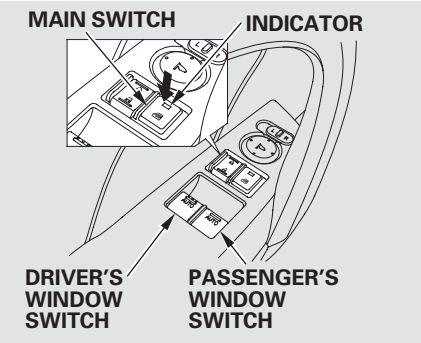

Turn the ignition switch to the ON (II) position to raise or lower either window. To open a window, push the switch down and hold it. Release the switch when you want the window to stop. Pull back on the switch and hold it to close the window.

⚠ WARNING

Closing a power window on someone's hands or fingers can cause serious injury.

Make sure your passengers are away from the windows before closing them.

AUTO — To open either window fully (driver's window only on LX and LX-S), push the window switch firmly down to the second detent, then release it. The window automatically goes down all the way. To stop the window from going all the way down, pull back on the window switch briefly.

To close either window fully (driver's window only on LX and LX-S), pull back the window switch firmly to the second detent, then release it. The window automatically goes all the way up. To stop the window from going all the way up, push down on the window switch briefly.

Power Windows

When you push the main switch in, the indicator comes on and the passenger's window cannot be raised or lowered. Use the main switch when you have children in the vehicle so they do not injure themselves by operating the window unintentionally. To cancel this feature, push on the switch again. The switch will pop out and the indicator will go off.

The windows and the main switch feature will operate for up to 10 minutes after you turn off the ignition switch. Opening either door cancels this function.

The indicators inside the window switches come on when the light control switch is in either ≣DOE or ≣D position with the ignition switch in the ON (II) position (driver's window switch only on LX and LX-S).

AUTO REVERSE — If either window (driver's window only on LX and LX-S) senses any obstacle while it is closing automatically, it will reverse direction, and then stop. To close the window, remove the obstacle, then use the window switch again.

Auto reverse stops sensing when the window is almost closed. You should always check that all passengers and objects are away from the window before closing it.

NOTE: The driver's window auto reverse function is disabled when you continuously pull up the switch.

Power Windows

Opening the Windows and Moonroof with the Remote Transmitter

You can open both windows and the moonroof (if equipped) from the outside with the remote transmitter.

1. Press the UNLOCK button once to unlock the driver's door.
2. Press the UNLOCK button a second time, and hold it. The passenger's door unlocks, and both windows and the moonroof start to open. To stop the windows and moonroof, release the button.
3. To open the windows and moonroof further, press the button again (within 10 seconds of step 1) and hold it. If the windows and the moonroof stop before the desired position, repeat steps 1 and 2.

You cannot close the windows or the moonroof with the remote transmitter.

Opening/Closing the Windows and Moonroof with the Key

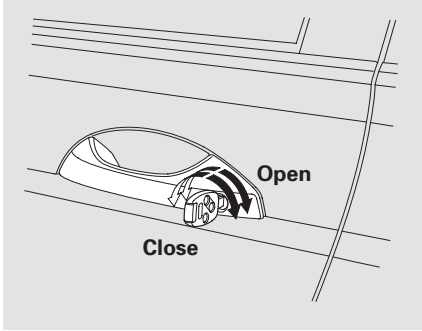

You can open and close the windows and the moonroof (if equipped) with the key in the driver's door lock.

To open:
1. Insert the key in the driver's door lock.
2. Turn the key clockwise, then release it.

3. Turn the key clockwise again, and hold it. Both windows and the moonroof start to open. To stop the windows and the moonroof, release the key.

4. To open the windows and the moonroof further, turn and hold the key again (within 10 seconds of step 2).

To close:
1. Insert the key in the driver's door lock.

2. Turn the key counterclockwise, then release it.

3. Turn the key counterclockwise again, and hold it. Both windows and the moonroof start to close. To stop the windows and the moonroof, release the key.

4. To close the windows and the moonroof further, turn and hold the key again (within 10 seconds of step 2).

NOTE: If the windows and the moonroof stop before the desired position, repeat steps 2 and 3.

Moonroof

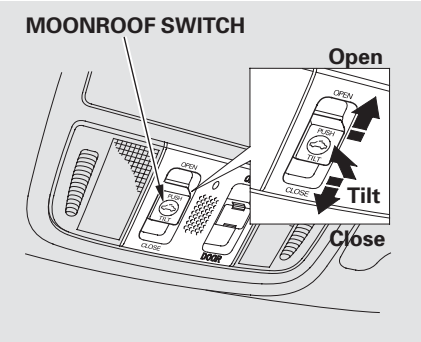

If equipped
The moonroof can be tilted up in the back for ventilation, or it can be slid back into the roof. Use the switch on the front ceiling to operate the moonroof. You must turn the ignition switch to the ON (II) position to operate the moonroof.

To tilt up the moonroof, push on the center of the moonroof switch. To stop the moonroof from tilting up fully, push the switch briefly.

To open the moonroof, pull back on the switch and hold it. Release the switch when the moonroof reaches the desired position. To close the moonroof, push the switch forward and hold it. Release the switch to stop the operation.

⚠ WARNING

Opening or closing the moonroof on someone's hands or fingers can cause serious injury.

Make sure all hands and fingers are clear of the moonroof before opening or closing it.

AUTO — To open the moonroof fully, pull back the moonroof switch firmly, then release it. The moonroof automatically opens all the way. To stop the moonroof from opening, push the switch briefly.

To close the moonroof fully, firmly push the moonroof switch forward, then release it. The moonroof automatically closes all the way. To stop the moonroof from closing, push the switch briefly.

To open or close the moonroof partially, lightly pull the switch back or push it forward and hold it. The moonroof will stop when you release the switch.

Auto Reverse
If the moonroof runs into any obstacle while it is closing automatically, it will reverse direction, and then stop. To close the moonroof, remove the obstacle, then use the moonroof switch again.

Auto reverse stops sensing when the moonroof is almost closed. You should always check that all passengers and objects are away from the moonroof before closing it.

You can open and close the moonroof for up to 10 minutes after you turn off the ignition switch. Opening either door cancels this function.

NOTICE

If you try to open the moonroof in below-freezing temperatures, or when it is covered with snow or ice, you can damage the moonroof panel or its motor.

You can use the remote transmitter or the key to operate the moonroof from the outside. Refer to page 106 for details.

Parking Brake

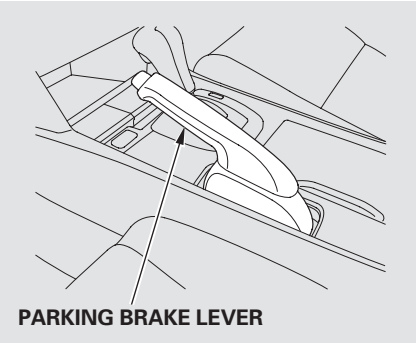

To apply the parking brake, pull the lever up fully. To release it, pull up slightly, push the button, and lower the lever. The parking brake indicator on the instrument panel should go out when the parking brake is fully released (see page 57).

NOTICE

Driving the vehicle with the parking brake applied can damage the rear brakes and hubs. A beeper will sound if the vehicle is driven with the parking brake on.

Interior Convenience Items

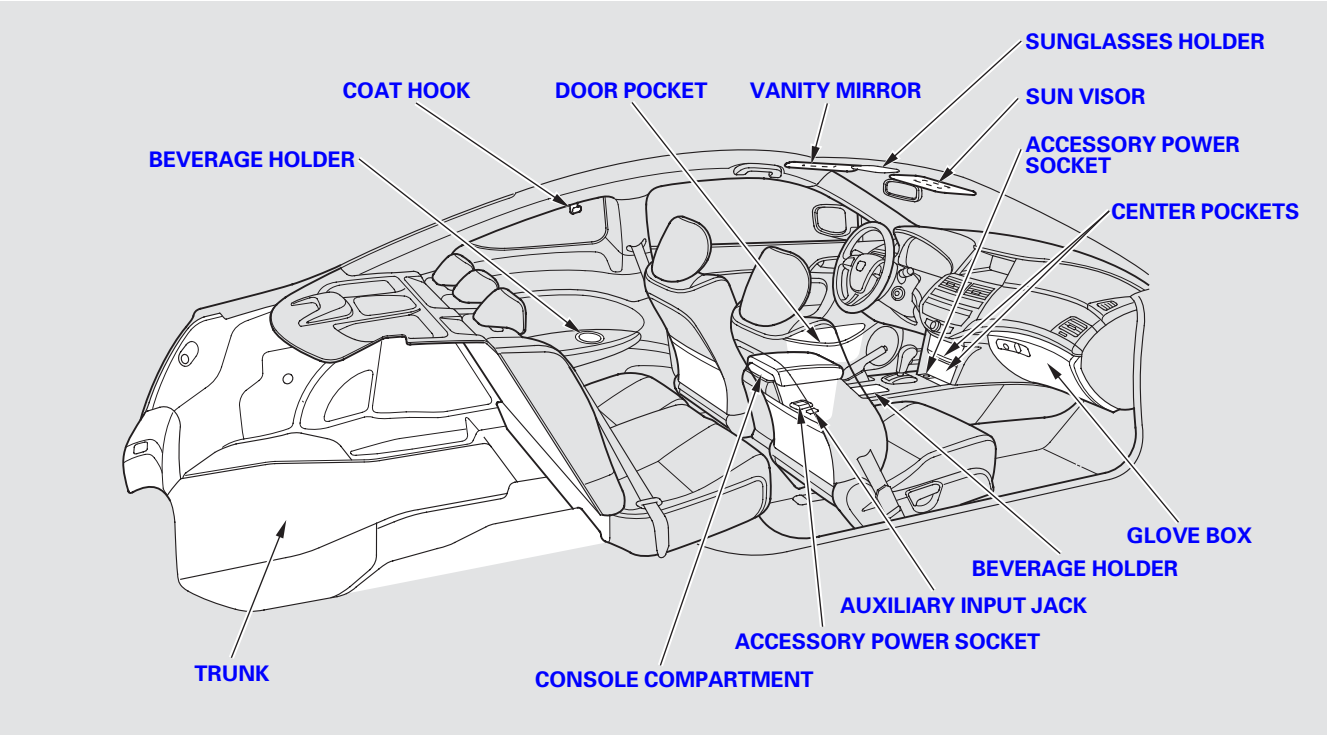

Interior Convenience Items

Glove Box

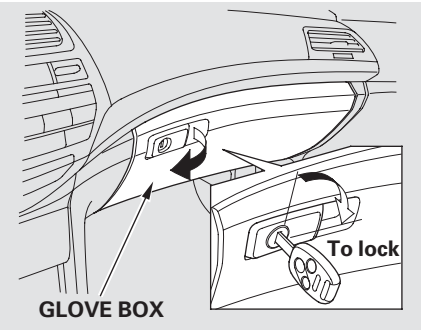

Open the glove box by pulling the handle to the left. Close it with a firm push. Lock or unlock the glove box with the master key.

⚠ WARNING

An open glove box can cause serious injury to your passenger in a crash, even if the passenger is wearing the seat belt.

Always keep the glove box closed while driving.

Beverage Holders

Be careful when you are using the beverage holders. A spilled liquid that is very hot can scald you or your passengers. Spilled liquids can damage the upholstery, carpeting, and electrical components in the interior.

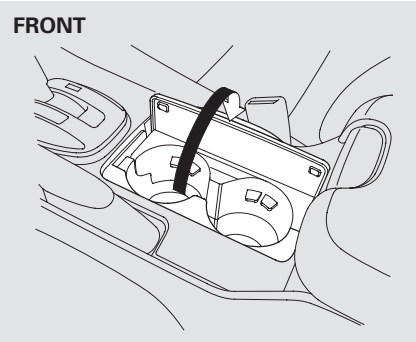

Open the front beverage holder by pulling up on the lid.

Each rear side panel also has a beverage holder.

Console Compartment

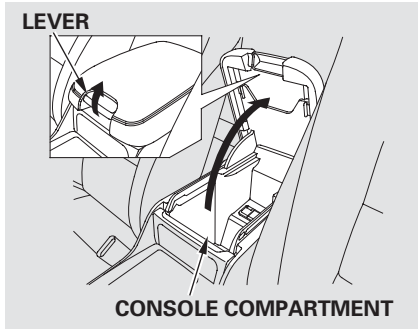

To open the console compartment, pull up on the lever and lift the armrest.

To close, lower the armrest, and push it down until it latches.

Interior Convenience Items

Accessory Power Sockets

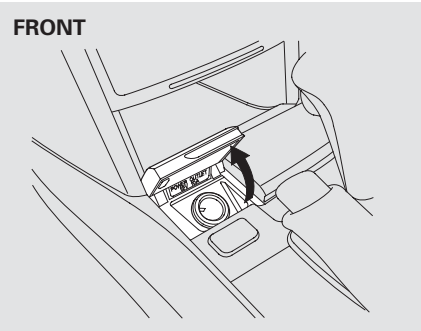

Your vehicle has two accessory power sockets; one is at the front of the center console and the other is in the console compartment.

To use an accessory power socket, the ignition switch must be in the ACCESSORY (I) or ON (II) position.

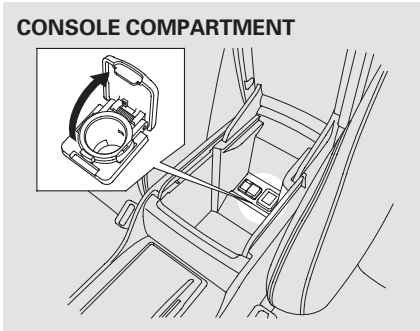

Each socket is intended to supply power for 12 volt DC accessories that are rated 120 watts or less (10 amps).

None of the sockets will power an automotive type cigarette lighter element.

Make sure to put the socket cover back in place to prevent any small foreign objects from getting into the socket.

Interior Convenience Items

Sun Visor

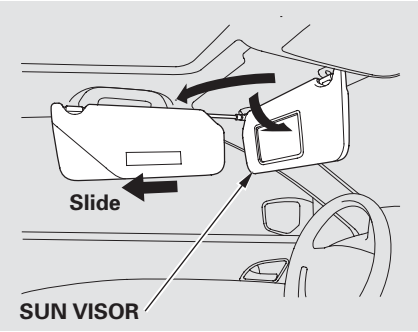

To use the sun visor, pull it down. When using the sun visor for the side window, remove the support rod from the clip, and swing it out.
In this position, the sun visor can be adjusted by moving it on its slider. Do not use the extended sun visor over the inside mirror.

Make sure you put the sun visor back in place when you are getting into or out of the vehicle.

Vanity Mirror

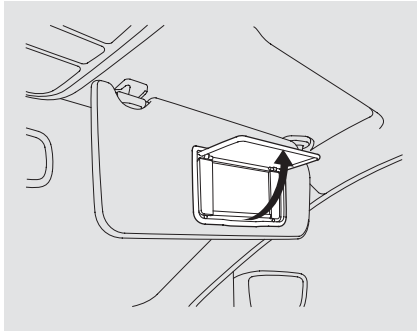

To use the vanity mirror on the back of the sun visor, pull up the cover.

The vanity mirror lights come on when you pull up the cover.

Sunglasses Holder

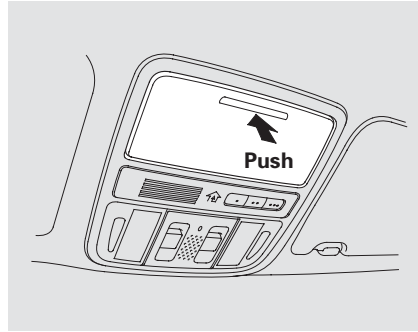

To open the sunglasses holder, push then release the indent. It will unlatch and swing down. To close it, push it until it latches. Make sure the holder is closed while you are driving.

CONTINUED

Interior Convenience Items

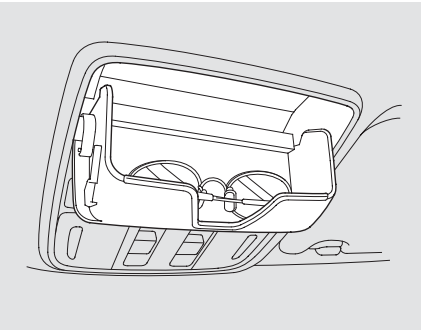

Some larger styles of sunglasses may not fit in the holder.

You may also store small items in this holder. Make sure they are small enough to let the holder close and latch, and that they are not heavy enough to cause the holder to pop open while driving.

Coat Hook

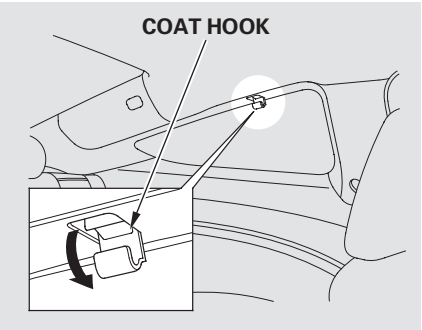

To use a coat hook, pull it down. Close it with a firm push.

Make sure the coat hook is closed when you are not using it. This hook is not designed for large or heavy items.

Center Pocket

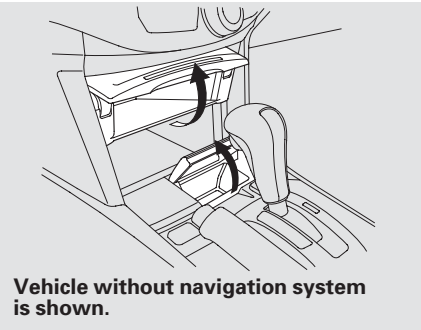

Vehicle without navigation system is shown.

Pull up the lid to open each pocket.

Interior Lights

Ceiling Light

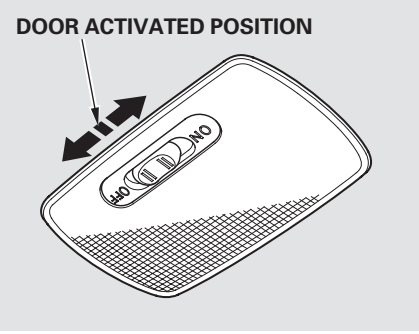

The ceiling light has a three-position switch: ON, Door Activated, and OFF. In the Door Activated (center) position, the light comes on when you:

- Open either door.
- Unlock the driver's door with the key or remote transmitter.

After both doors are closed tightly, the light dims slightly, then fades out in about 30 seconds.

The ceiling light (with the switch in the center position) comes on when you remove the key from the ignition switch. If you do not open a door, the light stays on, then fades out in about 30 seconds.

If you leave either door open without the key in the ignition switch, the ceiling light will go off after about 15 minutes.

Interior Lights

Spotlights

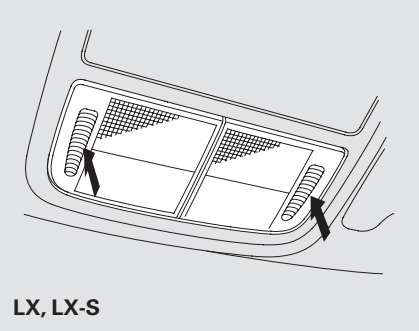

Turn on a spotlight by pushing the lens. Push the lens again to turn it off. You can use the spotlights at all times.

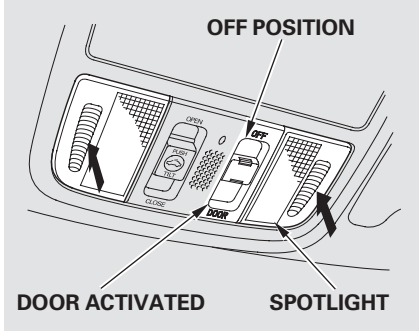

Except LX and LX-S
The spotlights have a two-position switch. In the DOOR position, the lights come on when you open either door. The lights fade out in about 30 seconds after the doors are closed tightly. In the OFF position, the lights do not come on.

The spotlights (with the switch in the DOOR position) also come on when you unlock the door with the key or the remote transmitter, and when you remove the key from the ignition switch.

Interior Lights

Courtesy Lights
Your vehicle has a courtesy light in the ignition switch. This light comes on when you open the driver's door. It fades out in about 30 seconds after the door is closed.

Features

The heating and air conditioning system in your vehicle provides a comfortable driving environment in all weather conditions.

The standard audio system has many features. This section describes those features and how to use them.

Your vehicle has an anti-theft audio system that requires a code number to enable it.

The security system helps to discourage vandalism and theft of your vehicle.

Vents, Heating, and A/C 122
Climate Control System..... 127
Audio System 135
Models without navigation system
Audio System 136
Playing the FM/AM Radio..... 137
Playing the XM® Radio 144
Playing Discs..... 150
Disc Changer Error Messages 160
Models with navigation system
Audio System 161
Playing the FM/AM Radio..... 162
Playing the XM® Radio 174
Playing Discs..... 181
Disc Changer Error Messages 192
Protecting Your Discs..... 193
FM/AM Radio Reception..... 196
Remote Audio Controls..... 198
Auxiliary Input Jack..... 199
Radio Theft Protection..... 200
Setting the Clock 201
Security System 204
Compass..... 206
Cruise Control..... 210
HomeLink® Universal Transceiver..... 213
Bluetooth® HandsFreeLink® 217

Vents, Heating, and A/C

LX, LX-S and U.S. EX

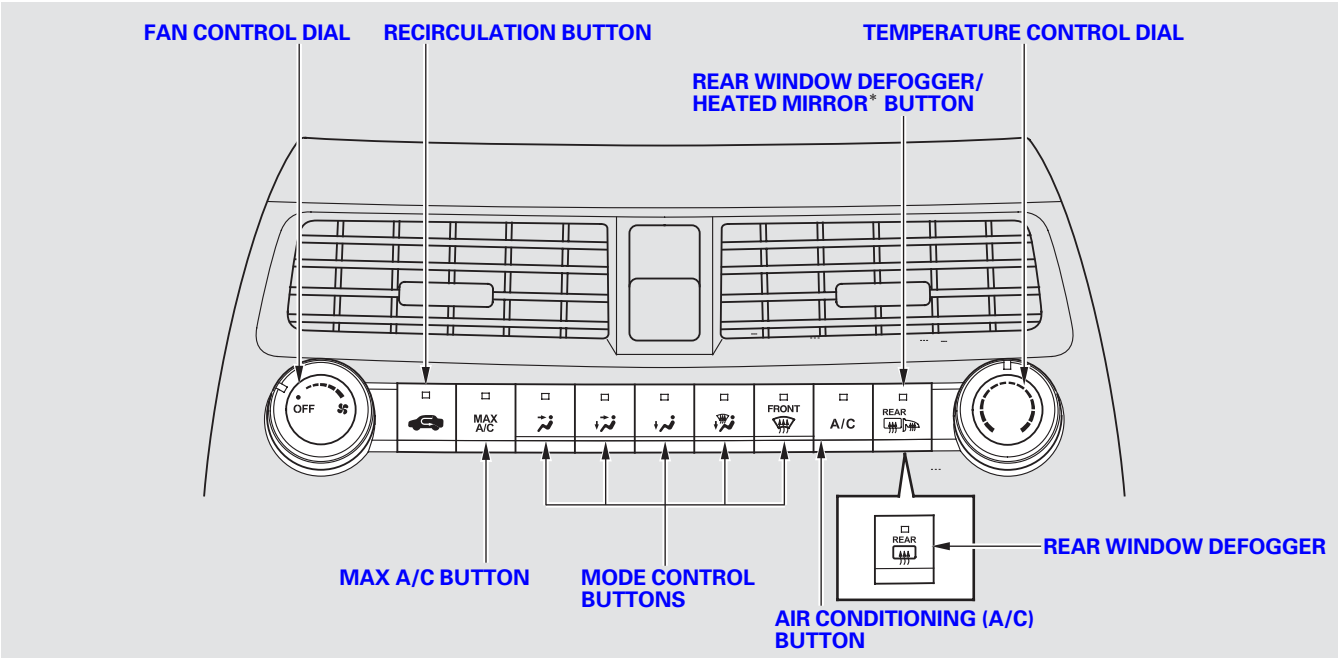

∗ : If equipped

Fan Control
Turn this dial to increase or decrease the fan speed and airflow.

Temperature Control
Turning this dial clockwise increases the temperature of the airflow.

Air Conditioning (A/C) Button
This button turns the air conditioning on and off. The indicator in the button is on when the A/C is on.

MAX A/C Button
MAX A/C The system automatically turns on the A/C and switches to recirculation mode (see page 125 to use this setting). Air flows from the center and side vents in the dashboard. Pressing the , A/C, or any of the mode buttons cancels MAX A/C, but the A/C stays on.

Recirculation Button
When the recirculation indicator is on, air from the vehicle's interior is sent throughout the system again. When the indicator is off, air is brought in from the outside of the vehicle (fresh air mode).

The outside air intakes for the heating and cooling system are at the base of the windshield. Keep this area clear of leaves and other debris.

The system should be left in fresh air mode under almost all conditions. Keeping the system in recirculation mode, particularly with the A/C off, can cause the windows to fog up.

Switch to recirculation mode when driving through dusty or smoky conditions, then return to fresh air mode.

Rear Window Defogger Button /
This button turns the rear window defogger on and off (see page 75).

Except U.S. LX and LX-S
Pushing this button also turns the power mirror heaters on and off.

Mode Control
Use the mode control buttons to select the vents air flows from. Some air will flow from the dashboard corner vents in all modes.

Air flows from the center and corner vents in the dashboard.

Airflow is divided between the vents in the dashboard and the floor vents.

CONTINUED

Vents, Heating, and A/C

Air flows from the floor vents.

When you select , the system automatically switches to fresh air mode. If you switch the mode from or to , the system keeps the A/C on. The A/C indicator will not come on if it was off to start with.

To turn off the A/C, press the A/C button to illuminate the indicator, then press it again to turn off the A/C.

When you switch to or mode from , the A/C turns off. But if it was on to start with, the A/C stays on.

Airflow is divided between the floor vents and the defroster vents at the base of the windshield.

Air flows from the defroster vents at the base of the windshield.

When you select or , the system automatically switches to fresh air mode and turns on the A/C. You cannot turn the A/C off in this mode.

Ventilation
The ventilation system draws in outside air, circulates it through the interior, then releases it through vents near the rear window.

1. Set the temperature to the lower limit.
2. Make sure the A/C is off.
3. Select and fresh air mode.
4. Set the fan to the desired speed.

Using the Heater
The heater uses engine coolant to warm the air. If the engine is cold, it will be several minutes before you feel warm air coming from the system.

1. Select .
   When you select , the system automatically switches to fresh air mode. If you switch the mode from or , the system also automatically turns on the A/C. This helps prevent the windows from fogging up unintendedly. The A/C indicator will not come on if it was off to start with (see the first column on this page).
2. Set the fan to the desired speed.
3. Adjust the warmth of the air with the temperature control dial.

Using the A/C

Air conditioning places an extra load on the engine. Watch the engine coolant temperature gauge (see page 65). If it moves near the red zone, turn off the A/C until the gauge reading returns to normal.

1. Turn on the A/C by pressing the button. The indicator in the button comes on when a fan speed is selected.
2. Make sure the temperature is set to maximum cool.
3. Select .
4. If the outside air is humid, select recirculation mode. If the outside air is dry, select fresh air mode.
5. Set the fan to the desired speed.

If the interior is very warm, you can cool it down more rapidly by partially opening the windows, turning on the air conditioning, and setting the fan to maximum speed in fresh air mode.

To cool the interior with MAX A/C:

1. Set the fan to the desired speed.
2. Select MAX A/C.
   The system automatically turns on the A/C, selects , and switches to recirculation mode.
3. Make sure the temperature is set to maximum cool.

Dehumidify the Interior

Air conditioning, as it cools, removes moisture from the air. When used in combination with the heater, it makes the interior warm and dry and can prevent the windows from fogging up.

1. Turn the fan on.
2. Turn on the air conditioning.
3. Select and fresh air mode.
4. Adjust the temperature to your preference.

This setting is suitable for all driving conditions whenever the outside temperature is above 32°F (0°C).

Vents, Heating, and A/C

To Defog and Defrost

To remove fog from the inside of the windows:

1. Set the fan to the desired speed, or high for faster defrosting.
2. Select . The system automatically switches to fresh air mode and turns on the A/C. The A/C indicator will not come on if it was off to start with.
3. Adjust the temperature so the airflow feels warm.
4. Select / to help clear the rear window.
5. To increase airflow to the windshield, close the corner vents.

When you switch to , from or , the A/C stays on. This helps prevent the windows from rapidly fogging up when the air is suddenly routed away from the windshield. If you want to turn the A/C off, press and release the A/C button twice. The indicator in the button comes on and then goes off.

To Remove Exterior Frost or Ice From the Windows

1. Select . The system automatically switches to fresh air mode and turns on the A/C. The A/C indicator does not come on if it was off to start with.
2. Select .
3. Set the fan and temperature controls to maximum level.

To clear the windows faster, you can close the dashboard corner vents by rotating the wheel below each vent. This sends more warm air to the windshield defroster vents. Once the windshield is clear, select fresh air mode to avoid fogging the windows.

For your safety, make sure you have a clear view through all the windows before driving.

To Turn Everything Off

Turning the fan speed control dial all the way to the left shuts the system off.

- Keep the system off for short periods only.
- To keep stale air and mustiness from collecting, you should have the fan running at all times.

Climate Control System

EX-L and all V6

Without navigation system

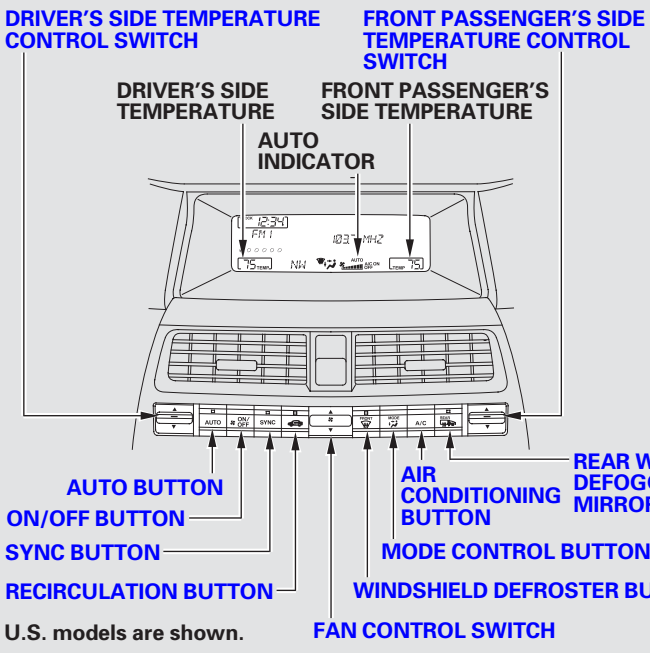

U.S. models are shown.

With navigation system

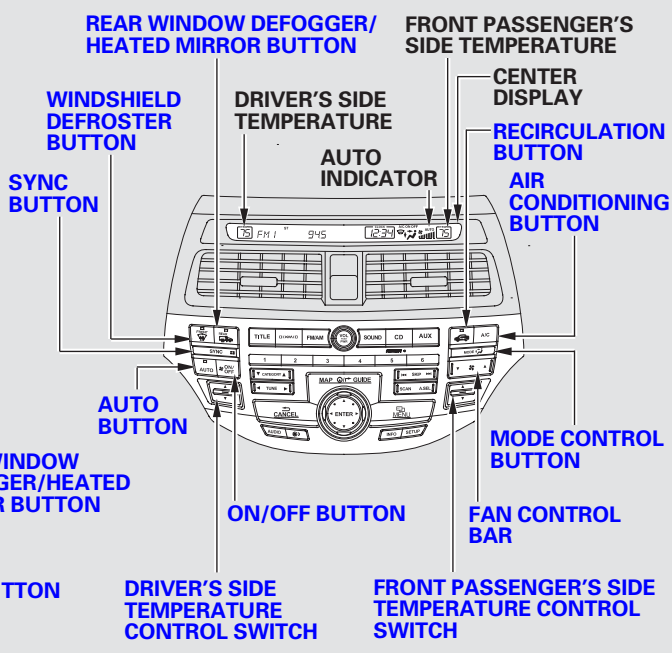

Climate Control System

Voice Control System

On models with navigation system

The climate control system for your vehicle can also be operated using the voice control system. See the navigation system manual for complete details.

Using Automatic Climate Control

The automatic climate control system in your vehicle maintains the interior temperature you select. The system also adjusts the fan speed and airflow levels.

1. Press the Auto button. The indicator in the button also comes on as a reminder. You will see AUTO on the display (in the center display on models with navigation system).

2. Set the desired temperature with the temperature control switch. You can set the driver's side temperature and the passenger's side temperature separately.

   The system automatically selects the proper mix of conditioned and/or heated air that will, as quickly as possible, raise or lower the interior temperature to your preference.

Temperature Control

The driver's side temperature and the passenger's side temperature can be set separately. Push up the switch of the appropriate temperature control to increase the temperature of airflow. Push down the switch to decrease it. Each set temperature is shown in the display (in the center display on models with navigation system).

When you set the temperature to its lower limit (Lo) or its upper limit (Hi), the system runs at full cooling or heating only. It does not regulate the interior temperature.

When you adjust a fan control, the fan is taken out of AUTO mode.

On models with navigation system
In AUTO mode, the vehicle's interior temperature is independently regulated for the driver and front passenger according to each adjusted temperature. The system also regulates each temperature based on the information of the sun light sensor and the sun's position which is updated automatically by the navigation's global positioning system (GPS). If one side of the vehicle is getting too much sun, the system lowers the temperature only on that side.

SYNC Button
When you press this button, the indicator in the button comes on, and the passenger's side temperature is synchronized to the driver's side set temperature. Changing the passenger's side temperature makes the indicator go off and takes the system out of SYNC mode.

ON/OFF Button
Each time you press this button, the climate control system switches between on and off. Turning on the system with this button selects your last climate control selection.

To Turn Everything Off
To turn the system completely off, press the ON/OFF button.

- Keep the system completely off for short periods only.
- To keep stale air and mustiness from collecting, you should have the fan running at all times.

Semi-automatic Operation
You can manually select various functions of the climate control system when it is in fully automatic mode. All other features remain automatically controlled. Making any manual selection causes the word AUTO in the display to go out.

Fan Control
On models without navigation system
Push the switch up to increase the fan speed and airflow. Push the switch down to decrease them.

On models with navigation system
Press the ▲ side of the bar to increase the fan speed and airflow. Press the ▼ side of the bar to decrease them.

Air Conditioning (A/C) Button
This button turns the air conditioning on and off. You will see A/C ON or A/C OFF in the display.

When you turn the A/C off, the system cannot regulate the inside temperature if you set the temperature control below the outside temperature.

Recirculation Button
When the indicator in the button is on, air from the vehicle's interior is sent through the system again. When the indicator is off, air is brought in from the outside of the vehicle (fresh air mode).

The outside air intakes for the climate control system are at the base of the windshield. Keep this area clear of leaves and other debris.

The system should be left in fresh air mode under almost all conditions. Keeping the system in recirculation mode, particularly with the A/C off, can cause the windows to fog up.

Switch to recirculation mode when driving through dusty or smoky conditions, then return to fresh air mode.

Rear Window Defogger Button
This button turns the rear window defogger off and on (see page 75).

Pushing this button also turns the power mirror heaters on and off.

Mode Control
Use the mode control button to select the vents the air flows from. Some air will flow from the dashboard vents in all modes.

Airflow is divided between the floor and corner vents and the defroster vents at the base of the windshield.

Air flows from the floor vents.

Airflow is divided between the vents in the dashboard and the floor vents.

Air flows from the center and corner vents in the dashboard.

Windshield Defroster Button
This button directs the main airflow to the windshield for faster defrosting. It also overrides any mode selection you may have made.

When you select , the system automatically switches to fresh air mode and turns on the A/C. For faster defrosting, manually set the fan speed to high. You can also increase airflow to the windshield by closing the corner vents on the dashboard. To close the vents, rotate the wheel under each corner vent.

When you turn off by pressing the button again, the system returns to its former settings.

To remove fog from the inside of the windows, set as follows:

1. Select . The system automatically switches to fresh air mode and turns on the A/C.
2. Adjust the temperature with the driver's side temperature control so the airflow feels warm.
3. Select to help clear the rear window.
4. To increase airflow to the windshield, close the corner vents. For faster defogging, manually set the fan speed to high.

For your safety, make sure you have a clear view through all the windows before driving.

When the indicator in the button is on, the SYNC indicator also comes on. The front passenger's temperature cannot be set separately from the driver's.

Climate Control System

Dual Temperature Control

Your vehicle has two temperature control switches, one for the driver, and one for the front passenger.

The temperatures of the driver's side and the front passenger's side are controlled independently.

Without navigation system

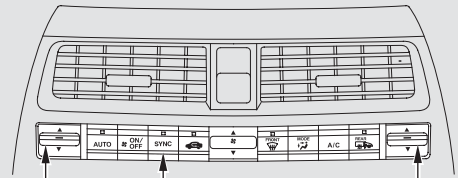

With navigation system

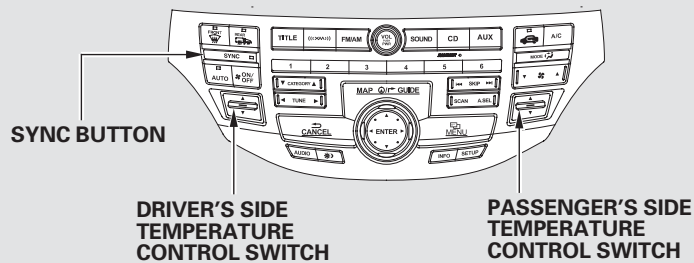

Synchronized Control
The selected temperatures appear in the display (in the center display on models with navigation system). When the indicator in the SYNC button is on, you can adjust both sides to the same temperature by pushing the driver's side temperature control switch up or down.

When you set the temperature to its upper or lower limit, it is displayed as Hi or Lo .

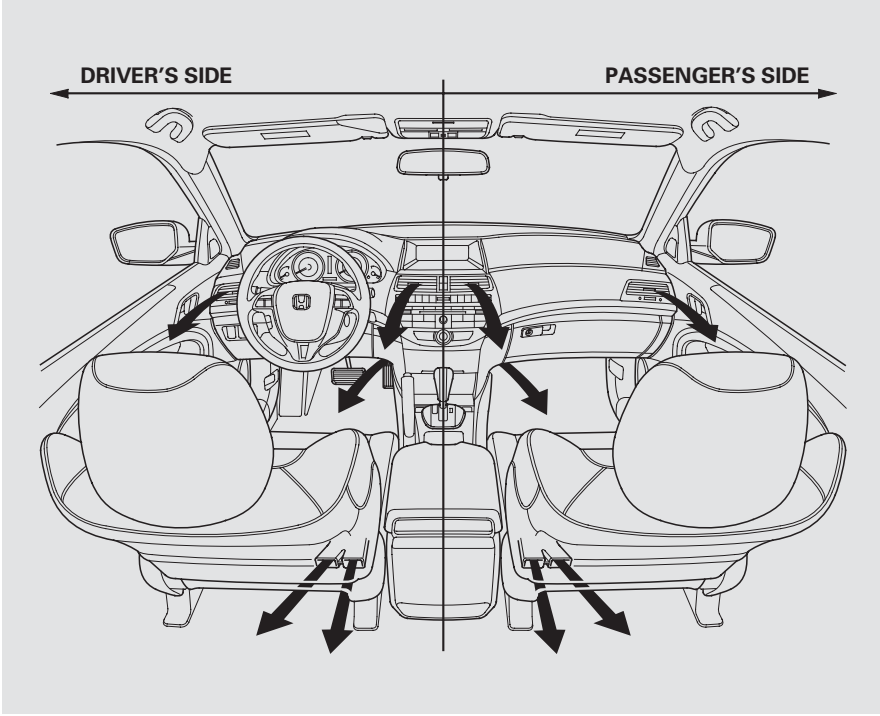

Climate Control System

Sunlight Sensor/Temperature Sensor

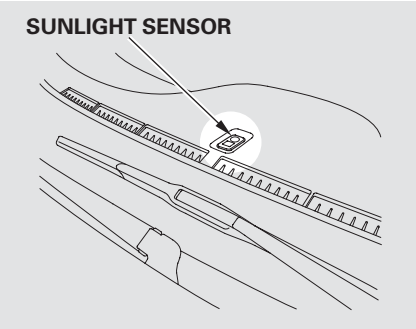

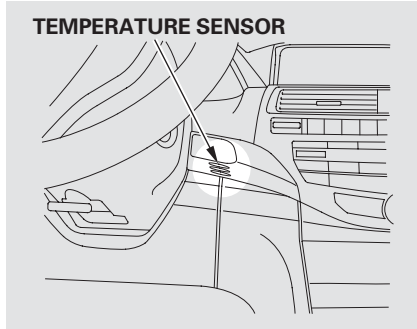

The climate control system has two sensors: a sunlight sensor on top of the dashboard, and a temperature sensor next to the steering column. Do not cover the sensors or spill any liquid on them.

An audio system is standard on all models. Read the appropriate pages (as shown below) to use your vehicle's audio system.

For vehicles without navigation system, see pages 136 through 160 .

For vehicles with navigation system, see pages 161 through 192 .

LX, LX-S and EX* models

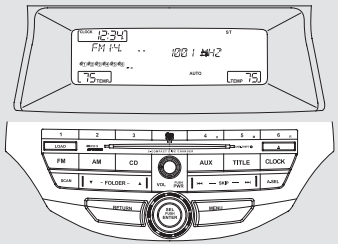

EX-L and all V6 models without navigation system

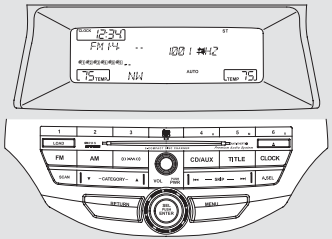

With navigation system

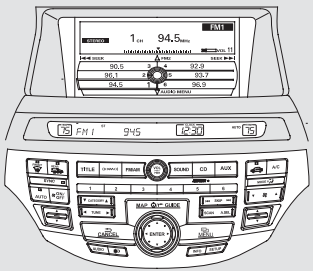

∗ : EX model has premium audio system.

U.S. models are shown.

Audio System (Models without navigation system)

Selector Knob

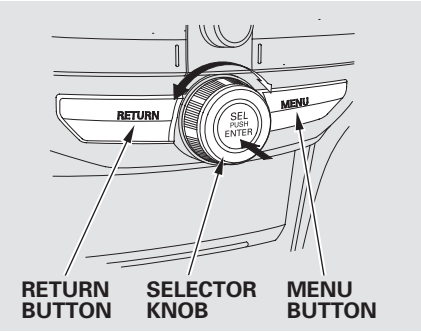

Most audio system functions can be controlled by standard buttons, bars, and knobs. In addition, you can access some functions by using the selector knob on the audio system.

The knob turns left and right. Use it to scroll through lists, or to make selections or adjustments to a list or menu item on the display. When you make a selection, push the center of the selector (ENTER) to go to that selection.

When the audio system is in XM® Radio mode or playing discs, pushing the selector (ENTER) knob switches the display between the normal display and the extended display. The extended display has three segments to display the detailed information.

Menu Display

To select any setting such as the clock, sound adjusting, or the compass (if equipped), press the MENU button. To use any audio system function, the ignition switch must be in the ACCESSORY (I) or ON (II) position. You can select the item by turning the selector knob. To go back to the previous display, press the RETURN button.

Pressing the MENU button again will also cancel the menu display mode.

Playing the FM/AM Radio (Models without navigation system)

Without XM® Radio

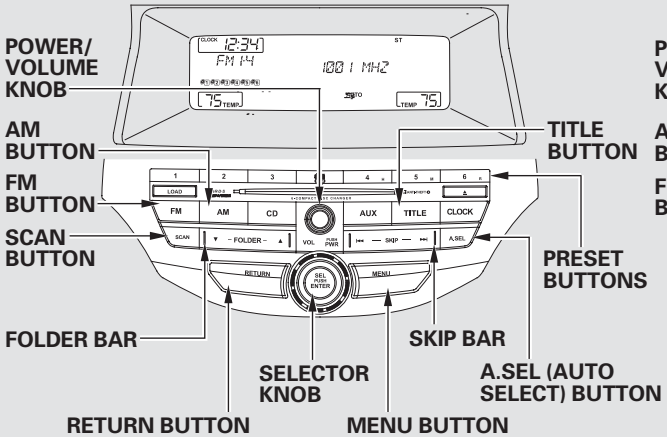

With XM® Radio

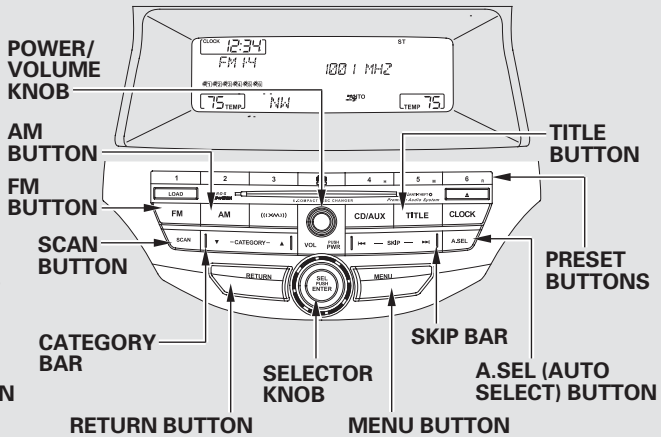

U.S. models are shown.

Playing the FM/AM Radio (Models without navigation system)

To Play the Radio
The ignition switch must be in the ACCESSORY (I) or ON (II) position. Turn the system on by pushing the power/volume knob or the AM or FM button. Adjust the volume by turning the power/volume knob.

The band and frequency that the radio was last tuned to are displayed. To change bands, press the AM or FM button. On the FM band, ST will be displayed if the station is broadcasting in stereo. Stereo reproduction in AM is not available.

On the AM band, AM noise reduction turns on automatically.

To Select a Station
You can use any of five methods to find radio stations on the selected band: tune, skip, scan, the preset buttons, and auto select.

On the FM band, you can also use the features provided by the radio data system (RDS). For more information on the RDS, see page 140.

TUNE — Use the selector knob to tune the radio to a desired frequency. Turn the knob right to tune to a higher frequency, or left to tune to a lower frequency.

SKIP — The skip function searches up and down from the current frequency to find a station with a strong signal. To activate it, press and hold the ►►| or |◄◄ side of the SKIP bar until you hear a beep, then release it.

Each time you press and release either side of the SKIP bar, the radio frequency changes in small increments.

SCAN — The scan function samples all stations with strong signals on the selected band. To activate it, press the SCAN button, then release it. You will see SCAN in the display. When the system finds a strong signal, it will stop and play that station for about 10 seconds.

If you do nothing, the system will scan for the next strong station and play it for 10 seconds. When it plays a station that you want to listen to, press the SCAN button again.

Playing the FM/AM Radio (Models without navigation system)

Preset — Each preset button can store one frequency on AM and two frequencies on FM.

1. Select the desired band, AM or FM. FM1 and FM2 let you store six stations each.
2. Use the tune, skip, scan, or RDS function to tune the radio to a desired station.
3. Pick a preset button, and hold it until you hear a beep.
4. Repeat steps 1 through 3 to store a total of six stations on AM and twelve stations on FM.

AUTO SELECT — If you are traveling and can no longer receive your preset stations, you can use the auto select feature to find stations in the local area.

Press the A. SEL button. “A-SEL” flashes in the display, and the system goes into scan mode for several seconds. It stores the frequencies of six AM and twelve FM stations in the preset buttons.

You will see a “0” displayed after pressing a preset button if auto select cannot find a strong station for that preset button.

If you do not like the stations auto select has stored, you can store other frequencies on the preset buttons as previously described.

To turn off auto select, press the A. SEL (auto select) button. This restores the presets you originally set.

For information on FM/AM radio frequencies and reception, see page 196 .

Playing the FM/AM Radio (Models without navigation system)

Radio Data System (RDS)
On the FM band, you can select a favorite station and display the program service name provided by the radio data system (RDS).

RDS INFO Display
The RDS information display function shows the name of the RDS station you are listening to. With the audio system on and the FM band selected, you can turn this function on or off.

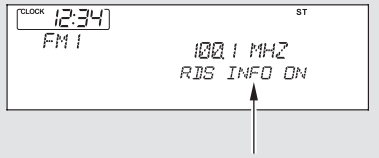

RDS INFO DISPLAY ON

To switch the function between on and off, press and release the TITLE button. With the system on, you will see the “RDS INFO ON” message on the display. If the station you are listening to is an RDS station, the displayed frequency switches to the station name.

If the station you are listening to is not an RDS station, the display continues to show the frequency with the RDS information display function on.

When you turn off this function by pressing the TITLE button, the display shows “RDS INFO OFF.”

Radio Data System (RDS) Category

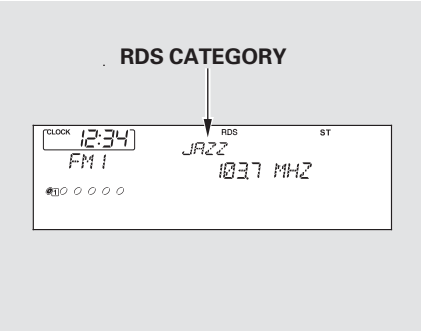

On the FM band selected, you can select the program category provided by the RDS. Press either side (▲ or ▼) of the CATEGORY bar (FOLDER bar on models without XM radio) to display and select an RDS category. The principal RDS categories are shown as follows:

ALL: All RDS category stations
ROCK: Rock, classic rock and soft rock music
COUNTRY: Country music
SOFT: Adult hits and soft music
TOP 40: Top 40 hits
OLDIES: Nostalgia music and oldies
R & B: Rhythm and blues, and soft rhythm and blues
RELIGION: Programs concerned with religion
CLASSIC: Classical music
JAZZ: Jazz
INFO: News, information, sports, talk shows, foreign language, personality, public, college, and weather
TRAFFIC: Traffic information

Press either side of the CATEGORY bar (FOLDER bar on models without XM Radio) to select an RDS category. The display shows the selected RDS category name for about 10 seconds. You can use the search or scan function to find radio stations in the selected RDS category. If you do nothing while the RDS category name is displayed, the selected category is canceled.

RDS Program Search

This function searches up and down a frequency for the strongest signal from the frequencies that carry the selected RDS category information. This can help you to find a station in your favorite category. To activate it, press and release either side (⏮ or ⏭) of the SKIP bar. You will see the selected RDS category name blinking while searching it. When the system finds a station, the selected RDS category name will be displayed again for about 5 seconds.

If the system does not find a station, “NOTHING” will be blinking for about 5 seconds, then the system goes back to the last selected station.

CONTINUED

Playing the FM/AM Radio (Models without navigation system)

RDS Program SCAN
The scan function samples all stations with strong signals on the selected RDS category. To activate it, press and release the SCAN button. You will see SCAN in the display. The system will scan for a station with a strong signal in the selected RDS category. You will also see the selected RDS category name blinking while searching it. When it finds a strong signal, it will stop and play that station for about 10 seconds.

If you do nothing, the system will scan for the next strong station and play it for 10 seconds. When it plays a station that you want to listen to, press the SCAN button again.

If the system does not find a station, “NOTHING” will be blinking for about 5 seconds, then the system goes back to the last selected station.

You can use the RDS program search or scan function even if the RDS information display function is off.

Adjusting the Sound

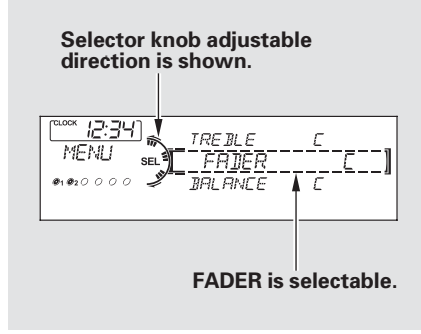

Press the MENU button to display the sound settings. Turn the selector knob to select an appropriate setting: bass, treble, fader, balance, SUBW* (subwoofer) and SVC (speed-sensitive volume compensation). Press the selector knob (ENTER) to enter the setting, then turn the selector knob to adjust the setting.

*: If equipped

BASS — Adjusts the bass.

TREBLE — Adjusts the treble.

FADER — Adjusts the front-to-back strength of the sound.

BALANCE — Adjusts the side-to-side strength of the sound.

If equipped
SUBW — Adjusts the strength of sound from the subwoofer speaker.

If the fader adjustment is set to F9 (maximum front level), the subwoofer is turned off.

SVC — Adjusts the volume level based on the vehicle speed.

Each mode is shown in the display as it changes. Turn the selector knob to adjust the setting to your liking.

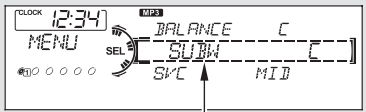

SUBWOOFER is selectable.

Except SVC adjustment
When the level reaches the center, you will see “C” in the display.

To return to the normal play, push the RETURN or MENU button after you stop adjusting a mode.

Speed-sensitive Volume Compensation (SVC)
The SVC mode controls the volume based on vehicle speed. The faster you go, the louder the audio volume becomes. As you slow down, the audio volume decreases.

The SVC has four modes: SVC OFF, SVC LOW, SVC MID, and SVC HIGH. Turn the selector knob to adjust the setting to your liking. If you feel the sound is too loud, choose low. If you feel the sound is too quiet, choose high.

This function is set to MID as the default setting when the vehicle leaves the factory.

Audio System Lighting
You can use the instrument panel brightness control knob to adjust the illumination of the audio system (see page 73). The audio system illuminates when the parking lights are on, even if the radio is turned off.

Playing the XM® Radio (EX-L and all V6 models without navigation system)

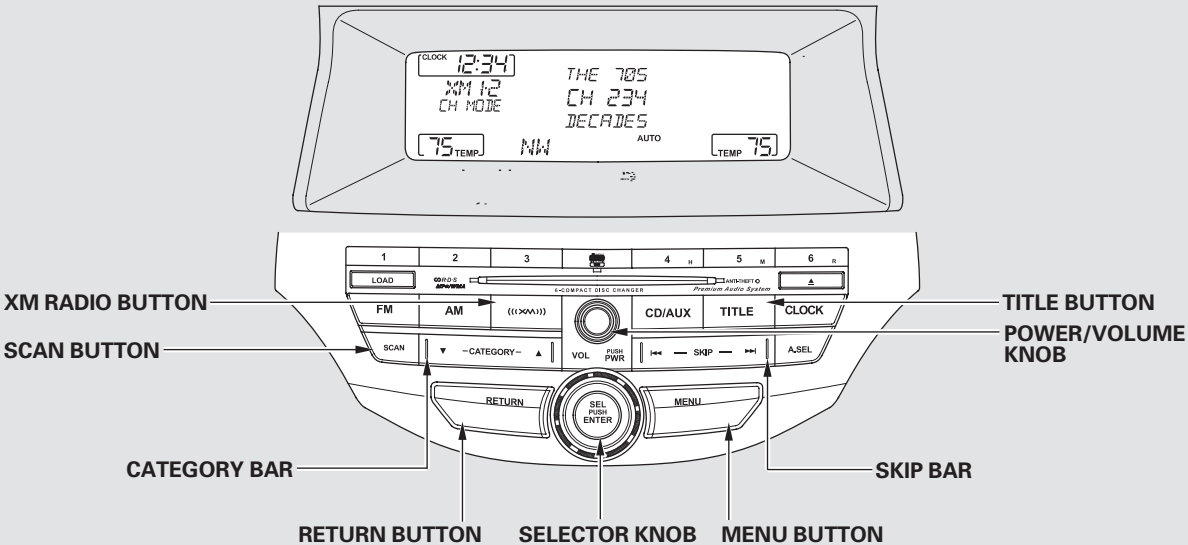

U.S. model is shown.

Playing the XM® Radio (EX-L and all V6 models without navigation system)

Your vehicle is capable of receiving XM® Radio anywhere in the United States and Canada, except Hawaii, Alaska, and Puerto Rico. XM is a registered trademark of Sirius XM Radio®, Inc. and XM CANADA® is a registered business name of Canadian Satellite Radio Inc.

XM Radio receives signals from two satellites to produce clear, high-quality digital reception. It offers many channels in several categories. Along with a large selection of different types of music, XM Radio allows you to view channel and category selections in the display.

Operating the XM Radio
To listen to XM Radio, turn the ignition switch to the ACCESSORY (I) or ON (II) position, and press the «XM» button. The last channel you listened to will show in the display. Adjust the volume by turning the power/volume knob.

MODE — To switch between channel mode and category mode, press and hold the TITLE button until the mode changes.

In the channel mode, you can select all of the available channels. In the category mode, such as Jazz, Rock, Classical, etc., you can select all of the channels within that category.

Each time you press and release the TITLE button, the display changes in the following sequence: name, title, and category.

You can also change the mode from the menu items. Press the MENU button to display the menu items, then turn the selector knob to select MODE/CATEGORY and press the selector knob (ENTER). Each time you press and release the selector knob (ENTER), the display changes between CHANNEL and CATEGORY. To enter the setting, press the TITLE button.

You may experience periods when XM Radio does not transmit the artist's name and song title information. If this happens, there is nothing wrong with your system.

CONTINUED

Playing the XM® Radio (EX-L and all V6 models without navigation system)

TUNE — Turn the selector knob to change channel selections. Turn the knob right for higher numbered channels and left for lower numbered channels. In the category mode, you can only select channels within that category.

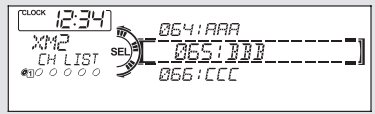

Channel list is shown.

You can also select a channel or category from the list by using the selector knob. Push the selector knob (ENTER) to switch the display to the list displayed with three segments, then turn the knob to select a channel or category. Press the selector knob (ENTER) to set your selection.

CATEGORY (▼ or ▲) — Press either side of the CATEGORY bar to select another category.

SCAN — The SCAN function gives you a sampling of all channels while in the channel mode. In the category mode, only the stations within that category are scanned. To activate scan, press the SCAN button. The system plays each channel in numerical order for a few seconds, then selects the next channel. When you hear a channel you want to continue listening to, press the button again.

Playing the XM® Radio (EX-L and all V6 models without navigation system)

Preset — You can store up to 12 preset channels using the six preset buttons. Each button stores one channel from the XM1 band and one channel from the XM2 band.

To store a channel:
1. Press the «XM» button. Either XM1 or XM2 will show in the display.

2. Use the selector knob, or the CATEGORY bar or SCAN button to tune to a desired channel.

In category mode, only channels within that category can be selected. In channel mode, all channels can be selected.

3. Pick the preset button you want for that channel. Press and hold the button until you hear a beep.

4. Repeat steps 2 and 3 to store the first six channels.

5. Press the XM button again. The other XM band will show. Store the next six channels using steps 2 and 3.

Once a channel is stored, simply press and release the proper preset button to tune to it.

XM Radio Display Messages

"LOADING" — XM is loading the audio or program information.

"OFF AIR" — The channel currently selected is no longer broadcasting.

"UPDATING" — The encryption code is being updated. Wait until the encryption code is fully updated. Channels 0 and 1 should still work normally.

"NO SIGNAL" — The signal is currently too weak. Move the vehicle to an area away from tall buildings, and with an unobstructed view of the southern horizon.

" - - - - " — The selected channel number does not exist, or is not part of your subscription, or this channel has no artist or title information at this time.

"NO INFO" — The selected channel has no artist or title information at this time.

"ANTENNA" — There is a problem with the XM antenna. Please consult your dealer.

CONTINUED

Playing the XM® Radio (EX-L and all V6 models without navigation system)

The XM satellites are in orbit over the equator; therefore, objects south of the vehicle may cause satellite reception interruptions. To help compensate for this, ground-based repeaters are placed in major metropolitan areas.

Satellite signals are more likely to be blocked by tall buildings and mountains the farther north you travel from the equator. Carrying large items on a roof rack can also block the signal.

Depending on where you drive, you may experience reception problems. Interference can be caused by any of these conditions:

- Driving on the north side of an east/west mountain road.
- Driving on the north side of a large commercial truck on an east/west road.
- Driving in tunnels.

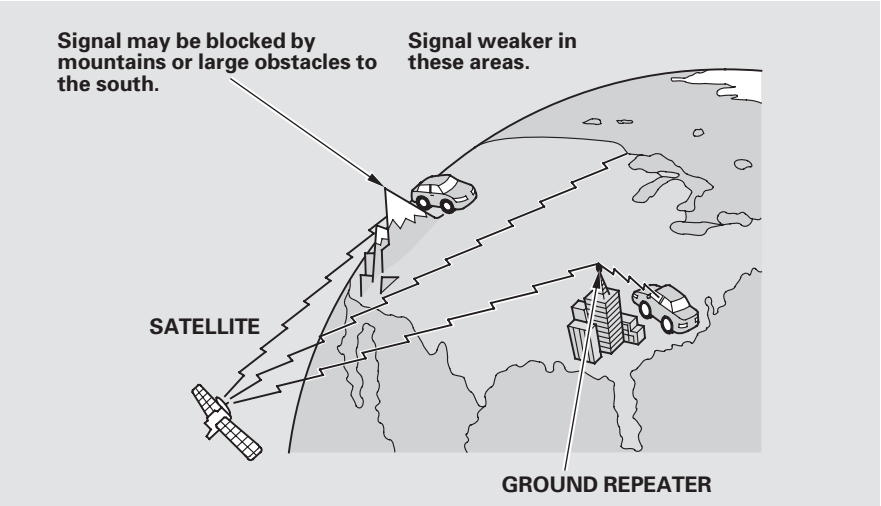

- Driving on a road beside a vertical wall, steep cliff, or hill to the south of you.
- Driving on the lower level of a multi-tiered road.
- Driving on a single lane road alongside dense trees taller than 50 ft. (15 m) to the south of you.
- Large items carried on a roof rack.

Playing the XM® Radio (EX-L and all V6 models without navigation system)

There may be other geographic situations that could affect XM Radio reception.

As required by the FCC:
Changes or modifications not expressly approved by the party responsible for compliance could void the user's authority to operate the equipment.

Receiving XM Radio Service
If your XM Radio service has expired or you purchased your vehicle from a previous owner, you can listen to a sampling of the broadcasts available on XM Radio. With the ignition switch in the ACCESSORY (I) or the ON (II) position, press the «XM» button. A variety of music types and styles will play.

If you decide to purchase XM radio service, contact XM Radio at *www.xmradio.com*, or at 1-800-852-9696. In Canada, contact XM CANADA® at *www.xmradio.ca*, or at 1-877-209-0079. You will need to give them your radio I.D. number and your credit card number. To get your radio I.D. number, press the «XM» button, then turn the selector knob until "CH 000" appears in the display. Your I.D. will appear in the display.

After you've registered with XM Radio, keep your audio system in the XM Radio mode while you wait for activation. This should take about 30 minutes.

While waiting for activation, make sure your vehicle remains in an open area with good reception. Once your audio system is activated, "CATEGORY" or "CHANNEL" will appear in the display, and you'll be able to listen to XM radio broadcasts. XM Radio will continue to send an activation signal to your vehicle for at least 12 hours from the activation request. If the service has not been activated after 36 hours, contact XM® Radio. In Canada, contact XM CANADA®.

Playing Discs (Models without navigation system)

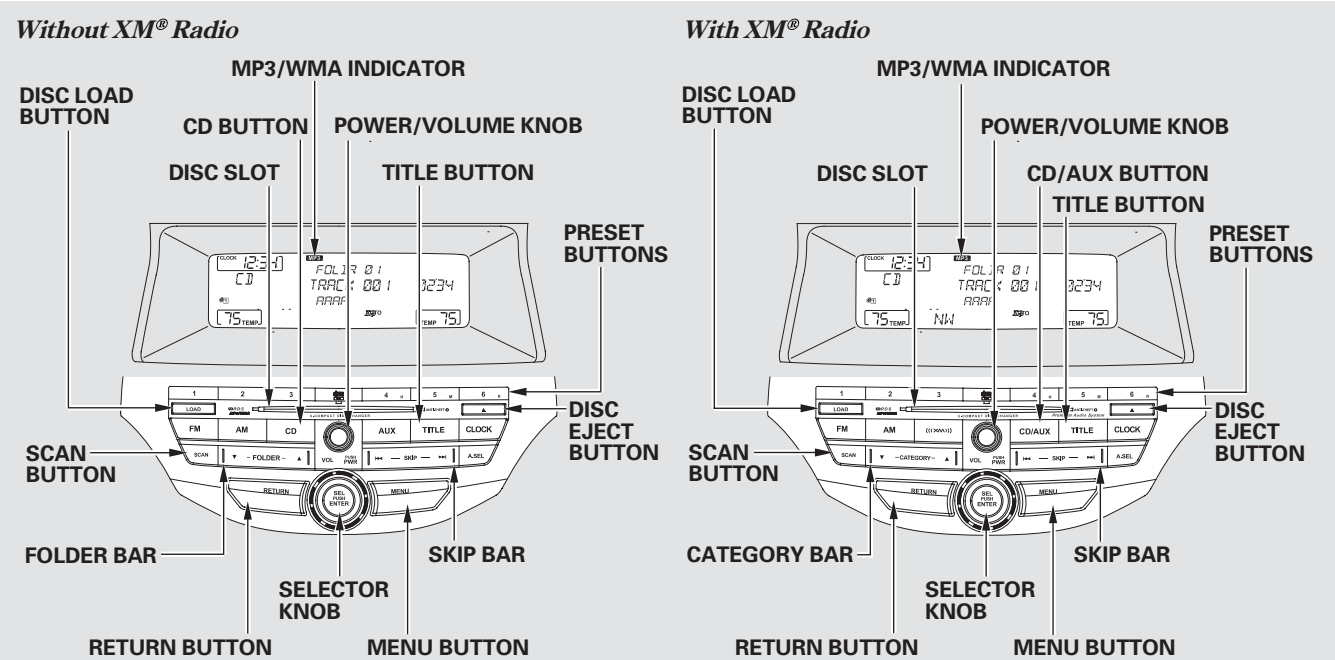

U.S. models are shown.

To Play a Disc
To load or play discs, the ignition switch must be in the ACCESSORY (I) or ON (II) position.

You operate the disc changer with the same controls used for the radio. To select the disc changer, press the CD/AUX or CD button. You will see "CD" in the display. The disc and track numbers, and the elapsed time are shown in the display. You can also select the displayed information with the TITLE button (see page 153). The system will continuously play a disc until you change modes.

NOTICE

Do not use discs with adhesive labels. The label can curl up and cause the disc to jam in the unit.

This audio system can also play CD-Rs and CD-RWs compressed in MP3 or WMA format. When playing a disc in MP3, you will see "MP3" in the display. In WMA format, "WMA" will appear in the display. The disc, folder and track numbers are displayed. You can select up to 255 folders or tracks.

Video CDs and DVDs do not work in this unit.

The specifications for compatible MP3 files are:
- Sampling frequency:
  32/44.1/48 kHz (MPEG1)
  16/22.05/24 kHz (MPEG2)
- Bitrate:
  32/40/48/56/64/80/96/112/128/160/192/224/256/320 kbps (MPEG1)
  8/16/24/32/40/48/56/64/80/96/112/128/160 kbps (MPEG2)
  Compatible with variable bitrate and multi-session
- Maximum layers (including ROOT): 8 layers

The specifications for compatible WMA files are:
- Sampling frequency:
  32/44.1/48 kHz
- Bitrate:
  48/64/80/96/128/160/192 kbps
  Compatible with variable bitrate and multi-session
- Maximum layers (including ROOT): 8 layers

CONTINUED

Playing Discs (Models without navigation system)

NOTE:
If a file on a WMA disc is protected by digital rights management (DRM), the audio unit displays UNSUPPORTED, and then skips to the next file.

Loading Discs
Your vehicle's in-dash disc changer holds up to six discs.

1. Press the LOAD button until you hear a beep and see "LOAD" in the display. To load only one disc, press and release the LOAD button.

2. The disc number for an empty position begins blinking.

3. Insert the disc into the disc slot when the green disc load indicator comes on. Insert it only about halfway; the drive will pull it in the rest of the way. You will see "BUSY" in the display while the disc load indicator turns red and blinks as the disc is loaded.

   You cannot load and play 3-inch (8-cm) discs in this unit.

4. When the disc load indicator turns green and "LOAD" appears in the display again, insert the next disc in the slot. Do not try to insert a disc until "LOAD" appears. You could damage the audio unit.

5. Repeat this until all six positions are loaded. If you are not loading all six positions, the system begins playing the last disc loaded.

You can also load a disc into an empty position while a disc is playing by pressing the appropriate preset button. The system stops playing the current disc and starts the loading sequence. It then plays the disc just loaded.

Playing Discs (Models without navigation system)

Text Data Display Function
Each time you press the TITLE button, the display shows you the text, if the disc was recorded with text data.

You can see the album, artist, and track name in the display. If a disc is recorded in MP3 or WMA, you can see the folder and file name, and the artist, album, and track tag.

With the folder name, you will see the FOLDER indicator in the display. The TRACK indicator is shown with the file or track name.

When you press and release the TITLE button while a disc without text data is playing, you will see “NO INFO” on the display.

The display shows up to 16 characters of selected text data (the folder name, file name, etc.).

If the text data has more than 16 characters, you will see the first 16 characters and the ▶ indicator in the display. Press and hold the TITLE button until the next 16 characters are shown. You can see up to 32 characters of the text data.

If you press and hold the TITLE button again, the display shows the first 16 characters again.

If any letter is not available, it is replaced with “ . ” (dot) in the display. When the disc has no text data, you will see “NO INFO” on the display.

You will also see some text data under these conditions:

- When a new folder, file, or track is selected.
- When you change the audio mode to play a disc with text data or in MP3 or WMA.
- When you insert a disc, and the system begins to play.

When playing a CD-DA with text data, the album and track name are shown in the display. With a disc in MP3 or WMA, the display shows the folder and file name.

When you turn on the audio system next time, the system keeps your selection with the TITLE button.

CONTINUED

Playing Discs (Models without navigation system)

To Change or Select Tracks/Files
Use the SKIP bar while a disc is playing to select passages and change tracks (files in MP3 or WMA mode).

In MP3 or WMA mode, use the FOLDER bar (CATEGORY bar on models with XM Radio) to select folders in the disc and use either side of the skip bar to change files.

To select a different disc, use the appropriate preset buttons (1 through 6). If you select an empty position, the system will go into the loading sequence (see page 152).

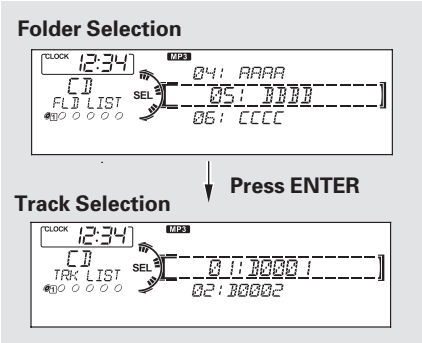

In MP3 or WMA mode, you can also select a folder or track/file from the list by using the selector knob. Push the selector knob (ENTER) to switch the display to the list displayed with three segments, then turn the knob to select a folder. Press the selector knob (ENTER) to change the display to the track/file list, then turn the same knob to select a track/file. Press the selector knob (ENTER) to set your selection.

SKIP — Each time you press and release the ►►| side of the SKIP bar, the player skips forward to the beginning of the next track (file in MP3 or WMA mode). Press and release the |◄◄ side of the bar to skip backward to the beginning of the current track. Press it again to skip to the beginning of the previous track.

To move rapidly within a track or file, press and hold either side (|◄◄ or ►►|) of the SKIP bar.

In MP3 or WMA mode
FOLDER SELECTION — To select a different folder, press either side (▲ or ▼) of the FOLDER bar (CATEGORY bar on models with XM Radio) to move to the beginning of the next folder. Press the ▲ side to skip to the next folder, and press the ▼ side to skip to the beginning of the previous folder.

To Select Repeat, Random or Scan Mode:

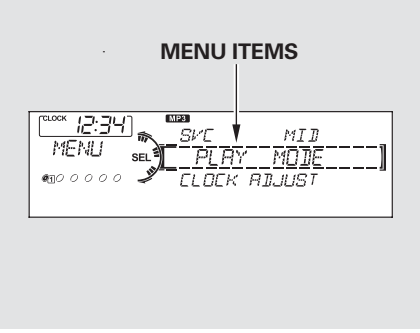

You can select any type of repeat, random and scan modes by using the MENU button and the selector knob. Push the MENU button to display the menu items, then turn the selector knob to select "PLAY MODE." Press the selector knob (ENTER) to set the selection.

Turn the selector knob to select an appropriate repeat, random or scan mode, then press the selector knob (ENTER) to set your selection.

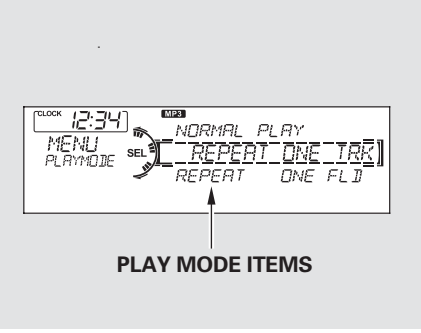

To cancel the selected repeat, random, or scan mode, press the MENU button to show "PLAY MODE," then press the selector knob (ENTER). When you see "NORMAL PLAY," press ENTER again.

CONTINUED

Playing Discs (Models without navigation system)

REPEAT ONE TRK — To continuously replay a track (file in MP3 or WMA mode), select REPEAT ONE TRK from the menu items. You will see REPEAT in the display. Select normal play to turn it off.
Pressing either side of the SKIP bar also turns off the repeat feature.

In MP3 or WMA mode
REPEAT ONE FLD — This feature, when activated, replays all the files on the selected folder in the order they are compressed in MP3 or WMA. To activate folder repeat mode, select REPEAT ONE FLD from the menu items. You will see F-REPEAT in the display. The system continuously replays the current folder. Select normal play to turn it off. Selecting a different folder with the FOLDER bar (CATEGORY bar on models with XM Radio) also turns off the repeat feature.

REPEAT DISC — This feature continuously replays the current disc. To activate disc repeat, select REPEAT DISC from the menu items. You will see D-REPEAT in the display. Select normal play to turn it off.

In MP3 or WMA mode
RANDOM IN FLD — This feature, when activated, plays the files within the current folder in random order, rather than in the order they are compressed in MP3 or WMA. To activate folder random play, select RANDOM IN FLD from the menu items. You will see F-RANDOM in the display. The system will then select and play files randomly. This continues until you deactivate folder random play by selecting normal play, or you select a different folder with the FOLDER bar (CATEGORY bar on models with XM Radio).

RANDOM IN DISC — This feature plays the tracks within a disc (the files in MP3 or WMA mode) in random order. To activate random play, select RANDOM IN DISC from the menu items. You will see RANDOM in the display. Select normal play to return to normal play.

Playing Discs (Models without navigation system)

SCAN TRK — The SCAN function samples all the tracks on the disc in the order they are recorded on the disc (all files in the selected folder in MP3 or WMA mode). To activate the scan feature, press and release the SCAN button. You will see SCAN in the display. You will get a 10 second sampling of each track/file in the disc/folder. Press and hold the SCAN button to get out of scan mode and play the last track sampled.

You can also select the scan feature from the menu items with the selector knob (see page 155).

In MP3 or WMA mode
SCAN FLD — This function samples the first file in each folder in the order they are stored. To activate the folder scan feature, press and release the SCAN button repeatedly. You will see F-SCAN in the display. You will get a 10 second sampling of the first file in each folder. Press and hold the SCAN button to get out of the folder scan mode and play the last file sampled.

You can also select the folder scan feature from the menu items with the selector knob (see page 155).

Pressing either side of the skip bar, or selecting a different disc (using the preset buttons) or folder (using the FOLDER or CATEGORY bar) turns off the SCAN or F-SCAN feature.

CONTINUED

Playing Discs (Models without navigation system)

SCAN DISC — This feature, when activated, samples the first track on each disc in order (the first file in the main folder on each disc in MP3 or WMA mode). To activate the disc scan feature, press and release the SCAN button repeatedly until D-SCAN shows in the display. The system will then play the first track/file in the first main folder on the first disc for about 10 seconds. If you do nothing, the system will then play the following first track/file for 10 seconds each. When it plays a track/file that you want to continue listening to, press and hold the SCAN button again.

When the first track on the last disc, or the first file in the last main folder in the last disc begins to play, the disc scan mode will be canceled. Pressing either side of the skip bar or selecting a different folder with the FOLDER or CATEGORY bar also turns off the scan feature.

Each time you press and release the SCAN button, the mode changes from scan, disc scan, then to normal play.

In MP3 or WMA mode
Each time you press and release the SCAN button, the mode changes from file scan, folder scan, disc scan, then to normal play.

You can also select the disc scan feature from the menu items with the selector knob (see page 155).

To Stop Playing a Disc
Press the eject button (⏏) to remove the disc. If you eject the disc, but do not remove it from the slot, the system will automatically reload the disc after 10 seconds and begin playing.

You can also eject the disc when the ignition switch is off.

To play the radio when a disc is playing, press the AM, FM or XM (if equipped) button. Press the CD (CD/AUX on models with XM Radio) button again to switch back to the disc changer.

You can also press the MODE button on the steering wheel to change modes.

Playing Discs (Models without navigation system)

If you turn the system off while a disc is playing, either with the power/volume knob or by turning off the ignition switch, the disc will stay in the drive. When you turn the system back on, the disc will begin playing where it left off.

Removing Discs from the In-dash Disc Changer

To remove the disc currently in play, press the eject button. When a disc is removed from a slot, the system automatically begins the load sequence so you can load another disc in that position. If you do not remove the disc from the changer within 10 seconds, the disc will reload into the slot. Then the system returns to the previous mode (AM, FM, or XM Radio).

To remove a different disc from the changer, first select it with the appropriate preset button. When that disc begins playing, press the eject button. Continue pressing the eject button to remove all the discs from the changer.

You can also eject discs when the ignition switch is off. The disc that was last selected is ejected first.

Protecting Discs

For information on how to handle and protect compact discs, see page 193.

Disc Changer Error Messages (Models without navigation system)

The chart on the right explains the error messages you may see in the display while playing a disc.

If you see an error message in the display while playing a disc, press the eject button. After ejecting the disc, check it for damage or deformation. If there is no damage, insert the disc again.
For additional information on damaged discs, see page 194 .

The audio system will try to play the disc. If there is still a problem, the error message will reappear. Press the eject button, and pull out the disc. Insert a different disc. If the new disc plays, there is a problem with the first disc. If the error message cycle repeats and you cannot clear it, take your vehicle to a dealer.

Error Message	Cause	Solution
HEAT ERROR	High Temperature	Will disappear when the temperature returns to normal.
UNSUPPORTED	Track/File format not supported	Current track will be skipped. The next supported track or file plays automatically.
BAD DISC PLEASE CHECK OWNERS MANUAL PUSH EJECT	Mechanical Error	Press the EJECT button and pull out the disc(s). Check the disc for serious damage, signs of deformation, excessive scratches, and/or dirt (see page 194). Insert the disc again. If the code does not disappear, or the disc(s) cannot be removed, consult your dealer. Do not try to force the disc out of the player.
BAD DISC PLEASE CHECK OWNERS MANUAL	Servo Error	

Audio System (Models with navigation system)

Interface Dial

Most audio system functions can still be controlled by standard buttons, dials, and knobs, but some functions can only be accessed using the interface dial. The interface dial has two parts, a knob and a selector.

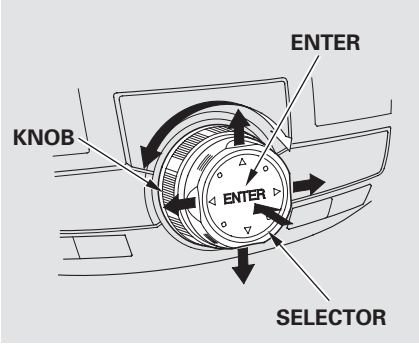

The knob turns left and right. Use it to make selections or adjustments to a list or menu on the screen.

The selector can be pushed left, right, up, down, and in. Use the selector to scroll through lists, to select menus, and to highlight menu items. When you make a selection, push the center of the selector (ENTER) to go to that selection.

Voice Control System

The audio system can also be operated by voice control. See the navigation system manual for complete details.

Playing the FM/AM Radio (Models with navigation system)

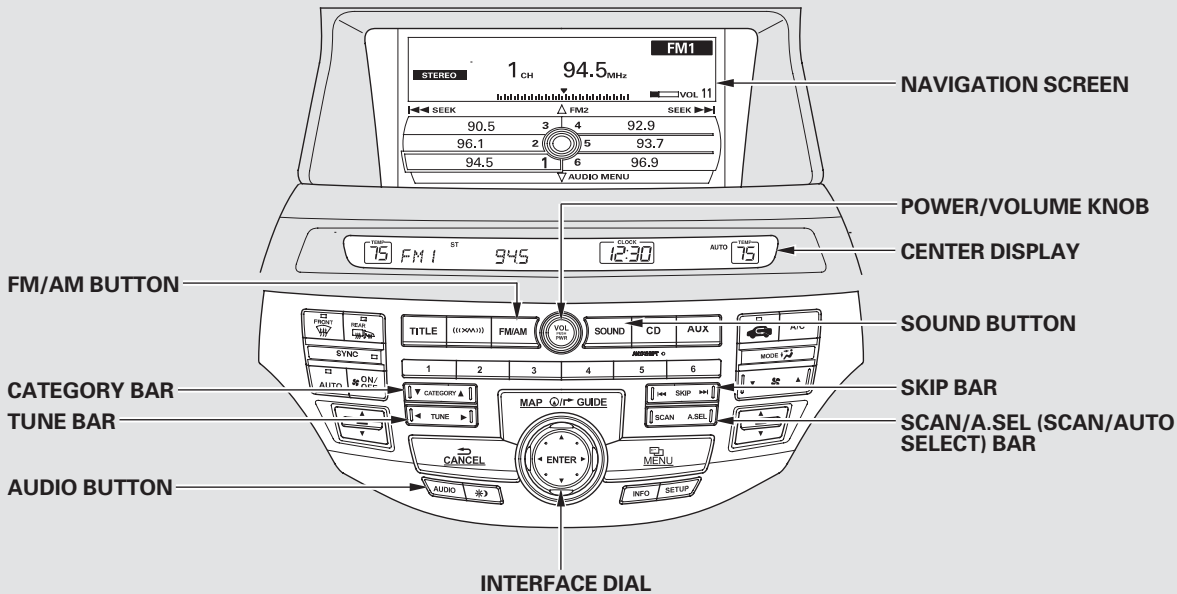

U.S. model is shown.

Playing the FM/AM Radio (Models with navigation system)

To Play the FM/AM Radio

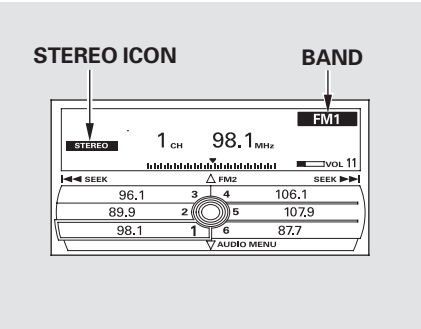

The ignition switch must be in the ACCESSORY (I) or the ON (II) position. Press the AUDIO button to view the audio control display. Turn the system on by pressing the power/volume knob or the FM/AM button. Adjust the volume by turning the power/volume knob.

The band and frequency that the radio was last tuned to are shown on the display. To change bands, press the FM/AM button. You can also change bands by pushing the interface selector up. Each time you push it up, the band will change to FM1, FM2, or AM. On the FM bands, STEREO will be shown on the navigation screen and ST on the center display, if the station is broadcasting in stereo. Stereo reproduction on AM is not available.

On the AM band, AM noise reduction turns on automatically.

To Select a Station

You can use any of five methods to find radio stations on the selected band: tune, skip (seek), scan, the preset buttons, and auto select. On the FM band, you can also use the features provided by the radio data system (RDS). For more information on the RDS, see page 166 .

CONTINUED

Playing the FM/AM Radio (Models with navigation system)

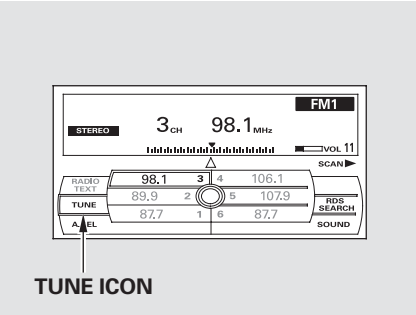

TUNE — Use the TUNE bar to tune the radio to a desired frequency. Press the right side of the bar to tune to a higher frequency, or the left side to tune to a lower frequency. To tune with the interface dial, push the selector down, and turn the knob to TUNE icon. Then press ENTER on the selector, and turn the knob to the desired frequency. To exit the TUNE mode, press ENTER on the selector, then push the selector up.

SKIP (SEEK) — The skip (seek) function searches up and down from the current frequency to find a station with a strong signal. To activate it, press either side (⏮ or ⏭) of the SKIP bar, then release it. You can also activate the skip function (SEEK is displayed on the screen) by pushing the interface selector to the right or left.

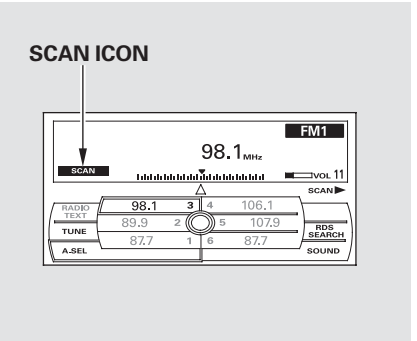

SCAN — The SCAN function samples all stations with strong signals on the selected band. To activate it, press the SCAN side of the SCAN/A.SEL bar, then release it.

To scan with the interface dial, push the selector down, and then push it to the right. You will see SCAN flashing on the screen.

Playing the FM/AM Radio (Models with navigation system)

When the system finds a strong signal, it will stop and play that station for about 10 seconds. If you do nothing, the system will then scan for the next strong station and play it for 10 seconds. When it plays a station that you want to listen to, press the scan side of the bar again, or push the interface selector to the right again.

Preset — Each preset button or preset icon can store one frequency on AM and two frequencies on FM.

To store a preset memory location:

1. Select the desired band, AM or FM. FM1 and FM2 let you store two sets of FM frequencies with the preset buttons (on-screen icons).

2. Use the tune, skip (seek), scan, or RDS function to tune the radio to a desired station.

3. Press the preset button, and hold it until you hear a beep. You can also store frequencies with the interface dial. Select the preset icon you want to store the frequency on, then press ENTER on the interface selector, and hold it for more than 2 seconds.

4. Repeat steps 1 through 3 to store a total of six stations on AM and twelve stations on FM.

AUTO SELECT — If you are traveling and can no longer receive your preset stations, you can use the auto select feature to find stations in the local area.

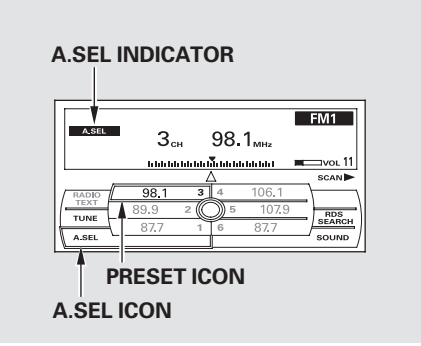

Push the interface selector down to scroll down the screen, highlight A.SEL, then press ENTER on the interface selector. You will see A.SEL on the screen, and the system goes into scan mode for several seconds.

CONTINUED

Playing the FM/AM Radio (Models with navigation system)

To turn off auto select, press ENTER on the interface selector.

You can also press the A.SEL side of the SCAN/A.SEL bar. You will see A.SEL on the screen, and the system goes into scan mode for several seconds. The system stores the frequencies of six AM and twelve FM stations in the preset buttons.

You will see “0” displayed if auto select cannot find a strong station for every preset button.
If you do not like the stations auto select has stored, you can store other frequencies on the preset buttons (icons) as previously described.

To turn off auto select, press the A. SEL side of the bar. This restores the presets you originally set.

For information on FM/AM radio frequencies and reception, see page 196 .

Radio Data System (RDS)
On the FM band, you can select a favorite station and display the program service name provided by the radio data system (RDS).

Program Service (PS) Name Display
The program service name display function shows the name of the station you are listening to. You can turn this function on or off.

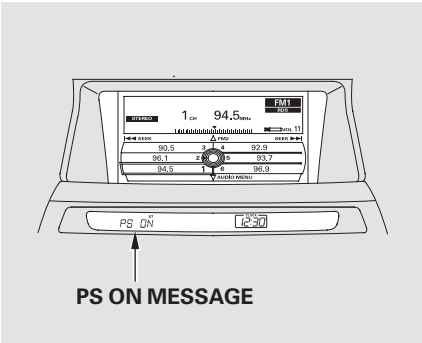

To switch the PS name display function on and off, press and release the TITLE button. With the system on, you will see the “PS ON” message on the center display. If the station you are listening to is an RDS station, the displayed frequency switches to the station name.

Playing the FM/AM Radio (Models with navigation system)

If the station you are listening to is not an RDS station, the audio screen and the center display continue to show the frequency.

When you turn off this function by pressing the TITLE button, the center display shows “PS OFF.”

Radio Data System (RDS) Category

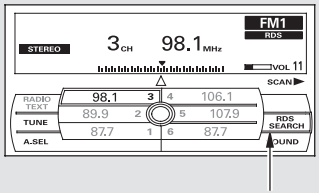

With the FM band selected, you can select the program type provided by the RDS. Press the AUDIO button to display the radio information on the screen. Push down the selector on the interface dial, then turn the knob to select RDS SEARCH icon. Press ENTER to set your selection. The principal RDS categories are shown as follows:

ALL: All RDS category stations
ROCK: Rock, classic rock and soft rock music
COUNTRY: Country music
SOFT: Adult hits and soft music
TOP 40: Top 40 hits
OLDIES: Nostalgia music and oldies
R & B: Rhythm and blues, and soft rhythm and blues
RELIGION: Programs concerned with religion
CLASSIC: Classical music
JAZZ: Jazz
INFO: News, information, sports, talk shows, foreign language, personality, public, college, and weather
TRAFFIC: Traffic information

CONTINUED

Playing the FM/AM Radio (Models with navigation system)

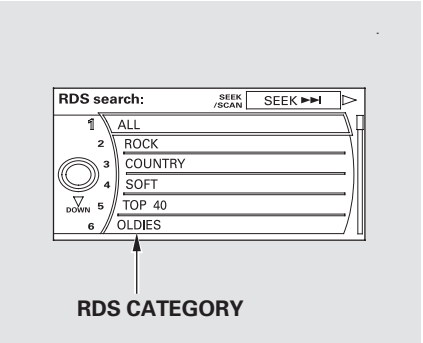

Turn the selector to select an RDS category. You can use the search or scan function to find radio stations on the selected RDS category by pressing the selector to the right repeatedly. Press ENTER to set your selection. If you do nothing while the RDS category is selected, the selected category is canceled.

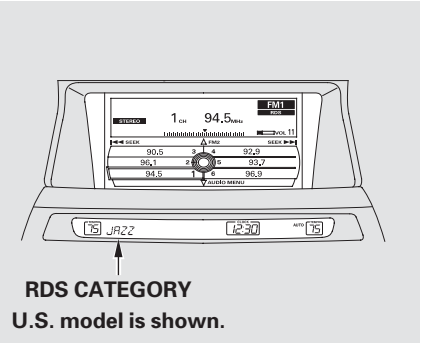

U.S. model is shown.

You can also select an RDS category with the CATEGORY bar. Press either side (▲ or ▼) of the CATEGORY bar to display an RDS category in the center display. Select a category by pressing either side of the bar.

RDS Program Search

This function searches up and down a frequency for the strongest signal from the frequencies that carry the selected RDS category information. This can help you to find a station in your favorite category. To activate it, press and release either side (I◄◄ or ►►I) of the SKIP bar. You will also see the selected RDS category name blinking in the center display while searching it. When the system finds a station, the selected RDS category name will be displayed again for about 5 seconds in the center display.

If the system does not find a station, “NOTHING” will be blinking for about 5 seconds, then the system goes back to the last selected station.

Playing the FM/AM Radio (Models with navigation system)

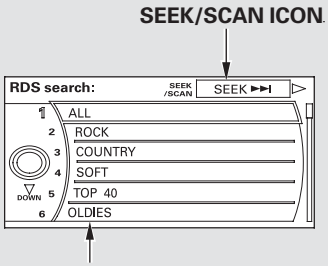

SEEK is selected.

To activate RDS program search with the interface dial, push the AUDIO button to display the FM radio information on the screen. Push the selector down, and turn the knob to select the RDS SEARCH icon. Press ENTER on the selector. The screen shows you the RDS category list.

Turn the knob to the desired RDS category.

While the RDS category is selected, move the selector knob to the right to select SEEK in the upper right corner of the screen. Then press ENTER to activate the seek function.

RDS Program SCAN

The scan function samples all stations with strong signals on the selected RDS category. To activate it, press and release the SCAN side of the SCAN/A.SEL bar. You will see SCAN in the center display. The system will scan for a station with a strong signal in the selected RDS category. You will also see the selected RDS category name blinking in the center display while searching it. When the system finds one, it will stop and play that station for about 10 seconds.

CONTINUED

Playing the FM/AM Radio (Models with navigation system)

If you do nothing, the system will scan for the next strong station and play it for 10 seconds. When it plays a station that you want to listen to, press the SCAN side of the SCAN/ A.SEL bar again.

If the system does not find a station, “NOTHING” will be blinking for about 5 seconds, then the system goes back to the last selected station.

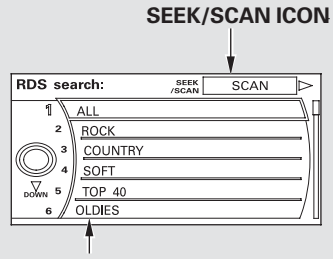

SCAN is selected.

To activate RDS program scan with the interface dial, push the AUDIO button to display the FM radio information on the screen. Push the selector down, and turn the knob to select the RDS SEARCH icon. Press ENTER on the selector. The screen shows you the RDS category list.

Turn the knob to the desired RDS category.

While the RDS category is selected, move the selector knob to the right to select SCAN in the upper right corner of the screen. Then press ENTER to activate the scan function.

You can use the RDS program search or scan function even if the PS name display function is off. In this case, the display shows a frequency in place of a PS name.

Playing the FM/AM Radio (Models with navigation system)

Radio Text Display

This function displays the radio text information of the selected RDS station.

If the selected RDS station has the radio text information, you will see the text indicator on the screen.

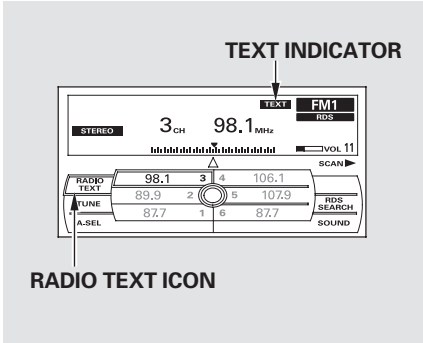

To activate radio text display, use the interface dial. Push the selector down, and turn the knob to select RADIO TEXT icon. Press ENTER on the selector to enter the setting.

The display shows up to 64 characters on the selected RDS station.

Playing the FM/AM Radio (Models with navigation system)

Adjusting the Sound

BASS, TREBLE, FADER, and BALANCE are each adjustable. You can also adjust the strength of the sound coming from the subwoofer speaker. In addition, you can set the speed-sensitive volume compensation (SVC).

These adjustments can be made by the SOUND button or the interface dial.

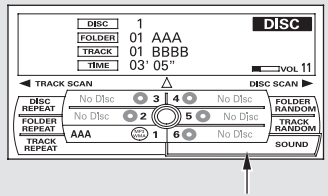

To adjust them, press the AUDIO button, push the interface selector down, and turn the interface knob to SOUND. Then press ENTER on the selector.

Select the mode you want to adjust by turning the interface dial.

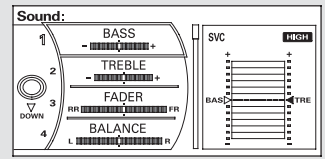

You can also adjust the sound by pushing the SOUND button repeatedly. Each mode is shown in the center display as it changes. Turn the power/volume knob to adjust the setting to your liking. When the level reaches the center, you will see “C” in the display.

The system will return to the audio playing mode in the center display about 10 seconds after you stop adjusting a mode.

Playing the FM/AM Radio (Models with navigation system)

BASS/TREBLE — To adjust bass and treble, select BASS or TREBLE, and press ENTER on the interface selector. The current setting is shown on the display. Turn the interface knob to the desired level, and enter your selection by pressing ENTER on the interface selector.

FADER/BALANCE — These modes adjust the strength of the sound coming from each speaker. Fader adjusts the front-to-back strength, while balance adjusts the side-to-side strength. To adjust fader and balance, select FADER or BALANCE, then press ENTER on the interface selector. The current setting is shown on the screen. Turn the interface knob to the desired level, and enter your selection by pressing ENTER on the interface selector. To equalize the fader or balance, turn the interface knob until the marks on the sound grid come to the center of the adjustment bar.

SUBWOOFER — To adjust the strength of the sound from the subwoofer speaker, select it and press ENTER on the interface selector. Turn the interface knob to the desired level, and enter your selection by pressing ENTER on the interface selector.

If the fader adjustment is set to F9 (maximum front level), the subwoofer is turned off.

Speed-sensitive Volume Compensation (SVC)

The SVC mode controls the volume based on vehicle speed. The faster you go, the louder the audio volume becomes. As you slow down, the audio volume decreases.

The SVC has four modes: SVC OFF, SVC LOW, SVC MID, and SVC HIGH. The default setting is MID. To change the SVC mode, select SVC, then press ENTER on the interface selector. The current setting is shown on the screen. Turn the interface knob to the desired level, and enter your selection by pressing ENTER on the interface selector. If you feel the sound is too loud, choose low. If you feel the sound is too quiet, choose high.

Playing the XM® Radio (Models with navigation system)

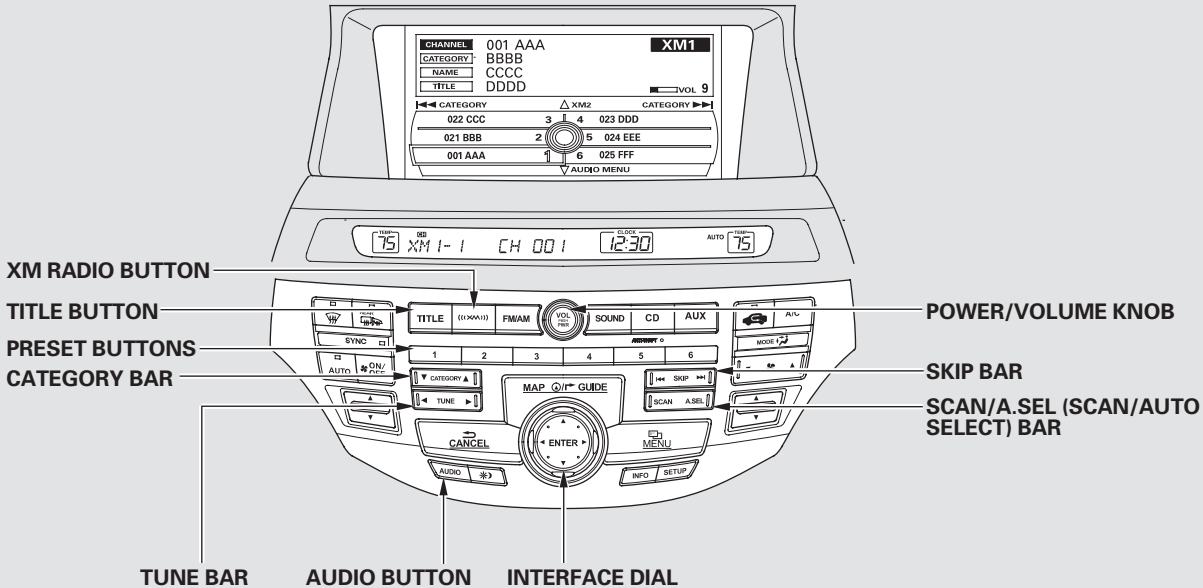

U.S. model is shown.

Playing the XM® Radio (Models with navigation system)

Your vehicle is capable of receiving XM® Radio anywhere in the United States and Canada, except Hawaii, Alaska, and Puerto Rico. XM is a registered trademark of Sirius XM Radio®, Inc. and XM CANADA® is a registered business name of Canadian Satellite Radio Inc.

XM Radio receives signals from two satellites to produce clear, high-quality digital reception. It offers many channels in several categories. Along with a large selection of different types of music, XM Radio also allows you to view channel and category selections in the audio display.

Operating the XM Radio

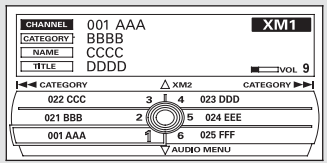

To listen to XM Radio, turn the ignition switch to the ACCESSORY (I) or ON (II) position, and press the «XM» button. The last channel you listened to will show in the audio screen and the center display. Adjust the volume by turning the power/volume knob.

Push the AUDIO button to display XM information on the screen. You can operate the XM Radio system with the interface dial.

CONTINUED

Playing the XM® Radio (Models with navigation system)

MODE — To switch between the category mode and channel mode, press and hold the TITLE button until the mode changes. The CATEGORY or CHANNEL mode is displayed on the screen. To switch the mode with the interface dial, push down the interface selector to select AUDIO MENU, then turn the knob to select MODE, and press ENTER on the selector repeatedly.

In the category mode, such as Jazz, Rock, Classical, etc., you can navigate through all of the channels within that category. In the channel mode, you can select all of the available channels.

Each time you press and release the TITLE button, the center display changes in the following sequence: NAME (artist name), TITLE (music title), and CHANNEL NAME (channel name).

On the screen, you will see the selected CHANNEL (number), CATEGORY, NAME (artist name), and TITLE (music title).

TUNE — Press either side of the TUNE bar to change channel selections. Press the ▶ side of the bar for higher numbered channels and the ◀ side for lower numbered channels. You can also change channels with the interface selector, push down the interface selector to select AUDIO MENU, then turn the interface knob to choose TUNE and press ENTER on the selector. Turn the interface knob to the appropriate direction. In the category mode, you can only select channels within that category.

CHANNEL LIST — Push down the interface selector to select AUDIO MENU, then turn the interface knob to select CHANNEL LIST and press ENTER on the selector. Turn the interface knob to select a channel, then press ENTER to set your selection.

Playing the XM® Radio (Models with navigation system)

CATEGORY (▼ or ▲) — Press either side of the bar to select another category. You can also change a category by pushing the interface selector left or right.

SCAN — The scan function gives you a sampling of all channels while in the channel mode. In the category mode, only the channels within that category are scanned. To activate SCAN, press the SCAN side of the SCAN/A.SEL bar. To scan with the interface dial, scroll down, and push interface selector to the right. You will see SCAN on the screen and center display.

The system plays each channel in numerical order for a few seconds, then selects the next channel. When you hear a channel you want to continue listening to, push the interface selector to the right again or press the SCAN side of the bar to cancel.

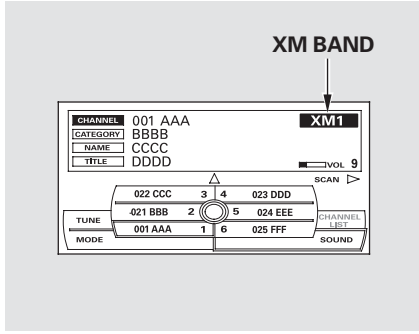

Preset — You can store up to 12 preset channels using the six preset buttons. Each button stores one channel from the XM1 band and one channel from the XM2 band.

To store a channel:

1. Press the ((XM)) button or scroll up by pushing the interface selector up. Either XM1 or XM2 will be shown on the display.
2. Use the tune, skip (seek), or scan function to tune to a desired channel.

   In category mode, only channels within that category can be selected. In channel mode, all channels can be selected.
3. Pick the preset button you want for that channel. Press and hold the preset button until you hear a beep. You can also pick the number with the interface dial. Select your desired number and press and hold ENTER on the interface selector.
4. Repeat steps 2 and 3 to store the first six channels.

CONTINUED

Playing the XM® Radio (Models with navigation system)

5. Press the «XM» button or scroll up again. The other XM band will be shown. Store the next six channels using steps 2 and 3.

   Once a channel is stored, press and release the proper preset button to tune to it.

XM Radio Display Messages

"LOADING" — XM is loading the audio or program information.

"OFF AIR" — The channel currently selected is no longer broadcasting.

"UPDATING" — The encryption code is being updated. Wait until the encryption code is fully updated. Channels 0 and 1 should still work normally.

"NO SIGNAL" — The signal is currently too weak. Move the vehicle to an area away from tall buildings, and with an unobstructed view of the southern horizon.

" - - - - " — The selected channel number does not exist, or is not part of your subscription, or this channel has no artist or title information at this time.

"NO INFO" — The selected channel has no artist or title information at this time.

"ANTENNA" — There is a problem with the XM antenna. Please consult your dealer.

Playing the XM® Radio (Models with navigation system)

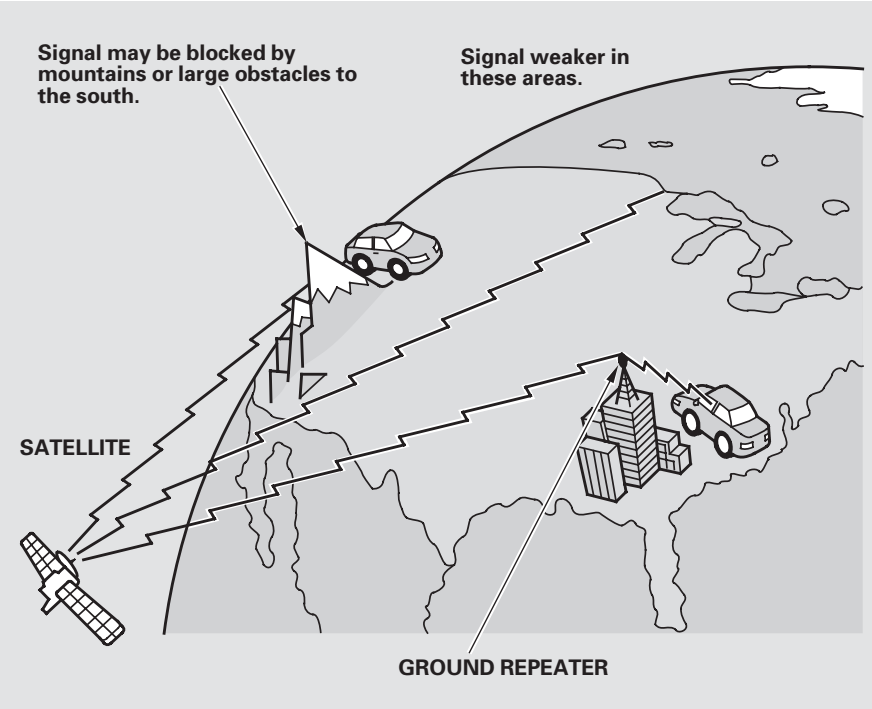

The XM satellites are in orbit over the equator; therefore, objects south of the vehicle may cause satellite reception interruptions. To help compensate for this, ground-based repeaters are placed in major metropolitan areas.
Satellite signals are more likely to be blocked by tall buildings and mountains the farther north you travel from the equator.

Depending on where you drive, you may experience reception problems. Interference can be caused by any of these conditions:

- Driving on the north side of an east/west mountain road.
- Driving on the north side of a large commercial truck on an east/west road.
- Driving in tunnels.

CONTINUED

Playing the XM® Radio (Models with navigation system)

- Driving on a road beside a vertical wall, steep cliff, or hill to the south of you.
- Driving on the lower level of a multi-tiered road.
- Driving on a single lane road alongside dense trees taller than 50 ft. (15 m) to the south of you.

There may be other geographic situations that could affect XM Radio reception.

As required by the FCC:
Changes or modifications not expressly approved by the party responsible for compliance could void the user's authority to operate the equipment.

Receiving XM Radio Service
If your XM Radio service has expired or you purchased your vehicle from a previous owner, you can listen to a sampling of the broadcasts available on XM Radio. With the ignition switch in the ACCESSORY (I) or the ON (II) position, press the «XM» button. A variety of music types and styles will play.

If you decide to purchase XM radio service, contact XM Radio at *www.xmradio.com*, or at 1-800-852-9696. In Canada, contact XM CANADA® at *www.xmradio.ca*, or at 1-877-209-0079. You will need to give them your radio I.D. number and your credit card number. To get your radio I.D. number, press the ▶ side of the TUNE bar until "0" appears in the display. Your I.D. will appear in the display.

After you've registered with XM Radio, keep your audio system in the XM Radio mode while you wait for activation. This should take about 30 minutes.

While waiting for activation, make sure your vehicle remains in an open area with good reception. Once your audio system is activated, CAT (category) or CH (channel) will appear in the center display, and you'll be able to listen to XM Radio broadcasts. XM Radio will continue to send an activation signal to your vehicle for at least 12 hours from the activation request. If the service has not been activated after 36 hours, contact XM® Radio. In Canada, contact XM CANADA®.

Playing Discs (Models with navigation system)

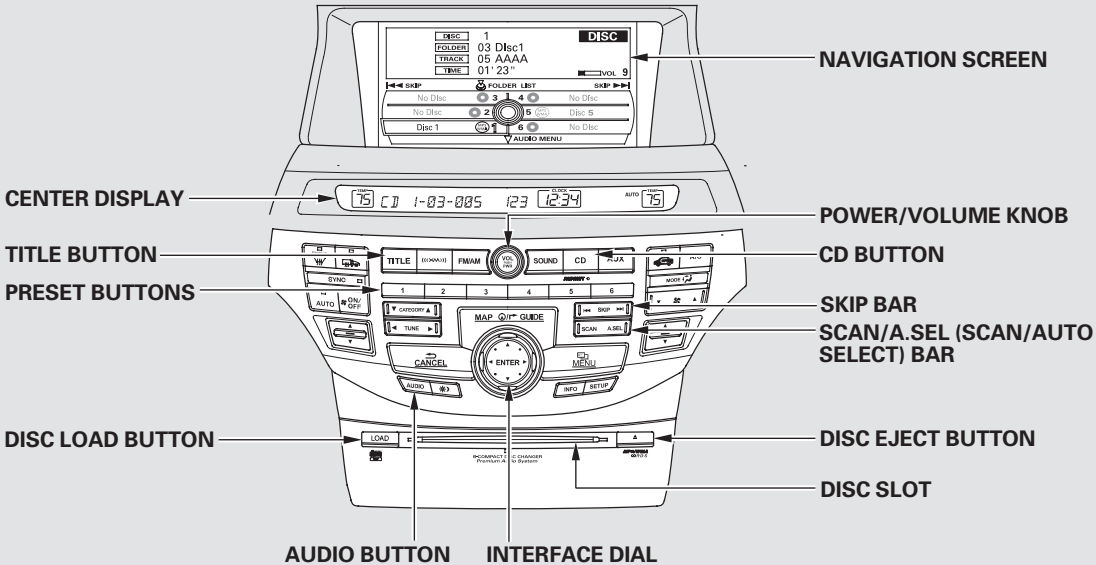

U.S. model is shown.

CONTINUED

Playing Discs (Models with navigation system)

Your vehicle's audio system has an in-dash disc changer with the same controls used for the radio. To operate the disc changer, the ignition switch must be in the ACCESSORY (I) or the ON (II) position.

The disc changer can play these disc formats:
- CD (CD-DA)
- MP3/WMA

The disc packages or jackets should have one of these marks.

The changer can also play MP3 or WMA format (see page 188).

When playing a disc in MP3, you will see "MP3" in the display. In WMA format, "WMA" will appear in the display.

NOTE:
If a file on a WMA disc is protected by digital rights management (DRM), the audio unit displays UNSUPPORTED, and then skips to the next file.

Video CDs and DVDs will not work in this unit.

Some CD-DA and CD-ROM mixed discs are not playable.

You cannot load and play 3-inch (8-cm) discs in this system.

NOTICE

Do not use discs with adhesive labels. The label can curl up and cause the disc to jam in the unit.

Loading Discs in the Changer
To load multiple discs in one operation:

1. With the ignition in the ACCESSORY (I) or the ON (II) position, press and hold the LOAD button until you hear a beep and see “LOAD” in the center display, then release the button.

2. Insert a disc into the slot. Insert it only about halfway; the drive will pull it in the rest of the way. You will see “BUSY” in the center display. When you insert the first disc, the changer will start to play the disc.

3. When “LOAD” appears in the center display again, insert the next disc into the slot.
   Do not try to insert a disc until “LOAD” appears. You could damage the audio unit.

4. Repeat this until all six positions are loaded. If you are not loading all six positions, the system will then begin playing the last disc loaded.

If you stop loading discs before all six positions are filled, the system will wait for 10 seconds, stop the load operation, and begin playing the last disc loaded.

To load a single disc:
1. Press and release the LOAD button.

2. “NO DISC” is shown on the screen for an empty position in the changer. When the green load indicator comes on and you see “LOAD” in the center display, insert the disc into the slot. Insert it only about halfway; the drive will pull it in the rest of the way.

Do not try to insert a disc until “LOAD” appears. You could damage the audio unit.

You can select the position to load a disc. Turn the interface knob or press a preset button to select the position, then press ENTER on the selector. This starts the loading sequence. If you do not select the position, the system loads the disc to the first empty position in numerical order.

If you press the LOAD button while a disc is playing, the system will stop playing that disc and start the loading sequence. It will then play the disc just loaded.

Playing Discs (Models with navigation system)

To Play a Disc

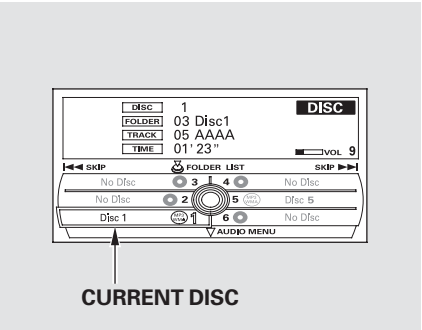

Select the changer by pressing the CD button. The system will begin playing the last selected disc in the disc changer. You will see the current disc position highlighted.

To select a different disc, press the corresponding number on the preset buttons, or turn the interface knob to highlight the desired disc number, then press ENTER on the interface selector.

The player can play CD-TEXT, MP3, and WMA formats.

When you play CD-TEXT, you will see the track name, artist name, and album name on the screen. When you play MP3/WMA discs, you will see the track name and folder name on the screen. If the disc was not recorded with this information, it will not be displayed.

To Change Tracks

Each time you press and release the ►►| side of the skip bar or push the interface selector to the right, the player skips forward to the beginning of the next track. Press and release the |◄◄ side of the skip bar or push the interface selector to the left to skip backward to the beginning of the current track. Press the |◄◄ side or push the interface selector to the left again to skip to the previous track. To move rapidly within a track, press and hold either side of the skip bar.

Playing Discs (Models with navigation system)

To Choose a Track

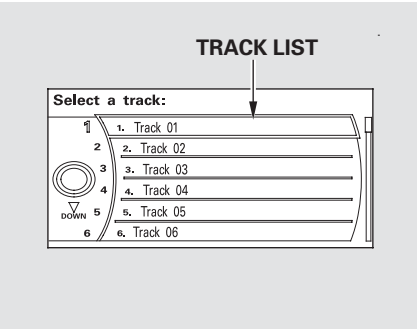

You can also choose a track directly from a track list. Press ENTER on the interface selector, and the track list screen will be shown. If there are no track names, track numbers are displayed. You will see the current track is highlighted. Turn the interface knob to select the desired track, then press ENTER on the interface selector.

To exit the track list display, press the AUDIO button, or push the interface selector to the left.

Track Scan

When you press the SCAN side of the SCAN/A. SEL bar or scroll down and push the interface selector to the left, the next track of the current track plays for about 10 seconds. You will see SCAN next to TRACK on the screen and center display. To listen to the rest of the track, press and hold the SCAN side of the bar until you hear a beep or push the interface selector to the left again within 10 seconds.

If you don't, the system advances to the next track, plays about 10 seconds of it, and continues through the rest of the tracks the same way.

Disc Scan

When you press the SCAN side of the SCAN/A. SEL bar repeatedly until you see D-SCAN in the center display, or push the interface selector to the right, the first track of the current disc plays for about 10 seconds. You will see SCAN next to DISC on the screen. The disc number is blinking and SCAN is also shown in the center display. To listen to the rest of the disc, press and hold the SCAN side of the bar until you hear a beep, or push the interface selector to the right again within 10 seconds.

If you don't, the system advances to the next disc, plays about 10 seconds of its first track, and continues through the rest of the discs the same way. When the system reaches the last disc, DISC SCAN is canceled, and that disc continues to play.

Playing Discs (Models with navigation system)

To Select Repeat or Random Mode:

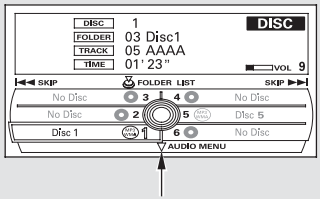

Push down the selector.

You can select any type of repeat and random modes by using the interface dial.
Push the AUDIO button to display the audio information on the screen, then scroll down by pushing down the selector to select the audio menu.

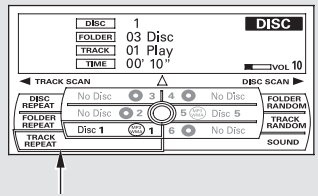

AUDIO MENU SCREEN

Turn the interface knob to select a desired repeat or random mode, then press ENTER to set your selection.

To cancel the selected repeat or random mode, have the selected mode highlighted, then press ENTER on the interface selector.

Track Repeat

To replay the current track continuously, select TRACK REPEAT, and press ENTER on the interface selector. As a reminder, you will see REPEAT next to TRACK on the screen. To turn this feature off, highlight TRACK REPEAT (if not already highlighted), and press ENTER on the interface selector again.

Playing Discs (Models with navigation system)

Disc Repeat
To replay the current disc continuously, select DISC REPEAT, and press ENTER on the interface selector. As a reminder, you will see REPEAT next to DISC on the screen. To turn this feature off, highlight DISC REPEAT (if not already highlighted), and press ENTER on the interface selector again.

Random Play
To play the tracks on the current disc in random order, select TRACK RANDOM, and press ENTER on the interface selector. As a reminder, you will see RANDOM next to TRACK on the screen. To turn this feature off, highlight TRACK RANDOM (if not already highlighted), and press ENTER on the interface selector again.

To Stop Playing a Disc
To take the system out of disc mode, press the FM/AM button, the «XM» button, or the AUX button (if an appropriate unit is connected). To return to disc mode, press the CD button.

You can also press the MODE button on the steering wheel to change modes.

If you turn the system off while a disc is playing, either with the power/volume knob or the ignition switch, play will continue at the same point when you turn it back on.

Playing Discs (Models with navigation system)

Playing an MP3/WMA Disc
The changer plays MP3/WMA files in recorded order. Each disc can hold up to 400 playable files within 8 folder layers. When playing MP3 discs, a disc can support a maximum number of 100 folders, and each folder can hold 255 playable files.

The specifications for compatible MP3 files are:
- Sampling frequency:
  32/44.1/48 kHz (MPEG1)
  16/22.05/24 kHz (MPEG2)
- Bitrate:
  32/40/48/56/64/80/96/112/128/160/192/224/256/320 kbps (MPEG1)
  8/16/24/32/40/48/56/64/80/96/112/128/160 kbps (MPEG2)
  Compatible with variable bitrate and multi-session
- Maximum layers
  (including ROOT): 8 layers

The specifications for compatible WMA files are:
- Sampling frequency:
  22.05/32/44.1/48 kHz
- Bitrate:
  32/40/48/64/80/96/128/160/192 kbps
  Compatible with variable bitrate and multi-session
- Maximum layers
  (including ROOT): 8 layers

To play an MP3/WMA disc, use the disc controls previously described, along with the following information.

Changing the Folders
While playing an MP3/WMA disc, you can select a folder within the disc by pressing either side of the category bar. Each time you press either side of the bar, the folder title and its first file's information appear in the center display in recorded order.

Playing Discs (Models with navigation system)

Changing and Selecting the Folders/ Files

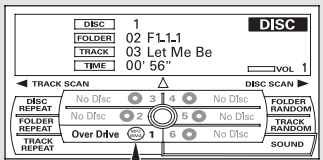

MP3/WMA INDICATOR

Using the interface selector, you can see the list of all the files and folders within a disc. While playing a MP3/ WMA disc, press the AUDIO button. The currently playing folder and file information comes on the screen.

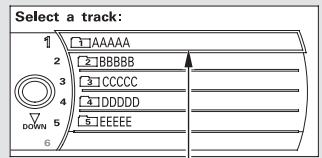

CURRENT FOLDER

Push ENTER on the selector to show the folder list. Turn the selector knob, highlight the folder you want to see the information within, and press ENTER.

CURRENT TRACK

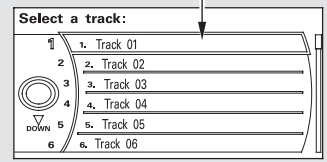

You can see the list of all the files in the selected folder. Turn the selector knob, then press ENTER to set your selection.

If the root folder has some additional folders in the lower layer, they will be listed on the screen.

Playing Discs (Models with navigation system)

Folder Scan
This feature, when activated, samples the first file in each folder for 10 seconds. To scan a folder, press the SCAN side of the SCAN/ A. SEL bar repeatedly. You will see SCAN next to FOLDER and the folder number blinking.

To listen to the rest of the folder, press and hold the SCAN side of the bar until you hear a beep. If you do nothing, the system advances to the next folder, plays 10 seconds of it, and continues with the remaining folders in the same way. When the system has finished sampling the first file in all folders, folder scan is canceled, and the last file played continues to play.

Folder Repeat
This feature, when activated, replays all files in the selected folder. To activate folder repeat mode, select FOLDER REPEAT by interface knob, and press ENTER on the interface selector. You will see REPEAT next to FOLDER on the screen. To turn this feature off, highlight FOLDER REPEAT (if not already highlighted), and press ENTER on the interface selector again.

To select any type of the repeat modes, use the interface dial. For more information, see page 186.

Folder Random
This feature, when activated, plays all files in the current folder in random order. To activate folder random play, select FOLDER RANDOM by using the interface knob, and press ENTER on the interface selector. You will see RANDOM next to FOLDER on the screen. To turn this feature off, highlight FOLDER RANDOM (if not already highlighted), and press ENTER on the interface selector again.

To select any type of the random modes, use the interface dial. For more information, see page 186.

Playing Discs (Models with navigation system)

Removing Discs from the Changer

To remove the disc that is currently playing, press the eject button. You will see “EJECT” in the center display. When you remove the disc from the slot, the system automatically enters the previous mode AM, FM1, FM2, or XM Radio. The system also begins the load sequence so you can load another disc. If you do not load another disc, the load sequence is canceled, and the system continues playing in the previous mode.

If you do not remove the disc from the slot, the system will reload the disc after 10 seconds. To begin playing the disc, press the CD button.

To remove a different disc from the changer, first select it by pressing the corresponding number on the preset button or turning the interface knob, and pressing ENTER on the interface selector. When that disc begins playing, press the eject button.

When you press the eject button while listening to the radio, or with the audio system turned off, the disc that was last selected is ejected. After that disc is ejected, pressing the eject button again will eject the next disc in numerical order. By doing this six times, you can remove all the discs from the changer.

You can also eject discs when the ignition switch is off:
To eject one disc, press and release the eject button.
To eject all discs, press and hold the eject button until the first disc begins to eject.

Disc Changer Error Messages (Models with navigation system)

The chart on the right explains the error messages you may see in the center display while playing a disc.

If you see an error message in the center display while playing a disc, press the eject button. After ejecting the disc, check it for damage or deformation. If there is no damage, insert the disc again.
For additional information on damaged discs, see page 194 .

The audio system will try to play the disc. If there is still a problem, the error message will reappear. Press the eject button, and pull out the disc. Insert a different disc. If the new disc plays, there is a problem with the first disc. If the error message cycle repeats and you cannot clear it, take your vehicle to a dealer.

Error Message	Cause	Solution
HEAT ERROR	High Temperature	Will disappear when the temperature returns to normal.
UNSUPPORTED	Track/File format not supported	Current track will be skipped. The next supported track or file plays automatically.
BAD DISC PLEASE CHECK OWNERS MANUAL PUSH EJECT	Mechanical Error	Press the EJECT button and pull out the disc(s). Check the disc for serious damage, signs of deformation, excessive scratches, and/or dirt (see page 194). Insert the disc again. If the code does not disappear, or the disc(s) cannot be removed, consult your dealer. Do not try to force the disc out of the player.
BAD DISC PLEASE CHECK OWNERS MANUAL	Servo Error	

Protecting Your Discs

General Information

- When using CD-R or CD-RW discs, use only high quality discs labeled for audio use.
- When recording a CD-R or CD-RW, the recording must be closed for it to be used by the disc changer.
- Play only standard, round, 5-inch (12 cm) discs. Smaller or odd-shaped discs may jam in the drive or cause other problems.
- Handle your discs properly to prevent damage and skipping.

NOTICE

Do not use discs with adhesive labels. The label can curl up and cause the disc to jam in the unit.

Protecting Discs

When a disc is not being played, store it in its case to protect it from dust and other contamination. To prevent warpage, keep discs out of direct sunlight and extreme heat.

To clean a disc, use a clean soft cloth. Wipe across the disc from the center to the outside edge.

A new disc may be rough on the inner and outer edges. The small plastic pieces causing this roughness can flake off and fall on the recording surface of the disc, causing skipping or other problems. Remove these pieces by rubbing the inner and outer edges with the side of a pencil or pen.

Never try to insert foreign objects in the disc changer.

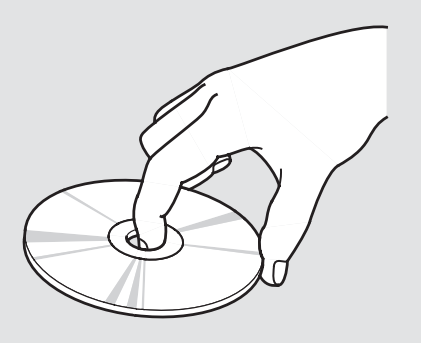

Handle a disc by its edges; never touch either surface. Do not place stabilizer rings or labels on the disc. These, along with contamination from finger prints, liquids, and felt-tip pens, can cause the disc to not play properly, or possibly jam in the drive.

Protecting Your Discs

Additional Information on Recommended Discs
The in-dash disc player/changer has a sophisticated and delicate mechanism. If you insert a damaged disc as indicated in this section, it may become stuck inside and damage the audio unit.

Examples of these discs are shown to the right:

1. Bubbled, wrinkled, labeled, and excessively thick discs

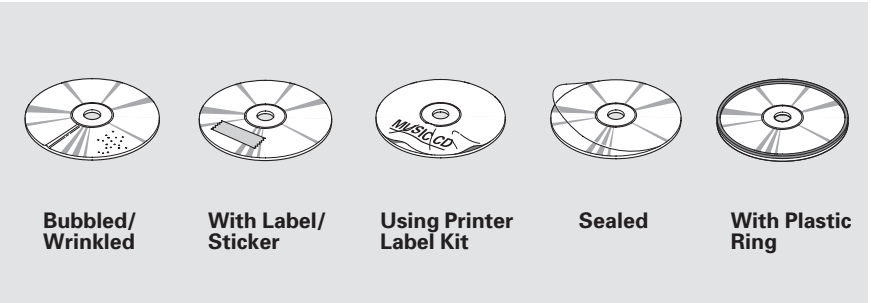

2. Damaged discs

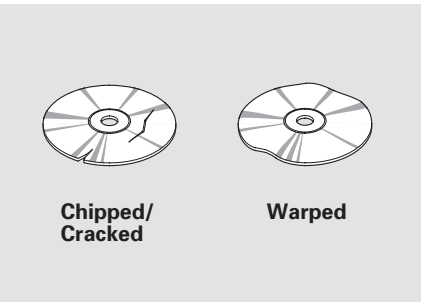

3. Poor quality discs

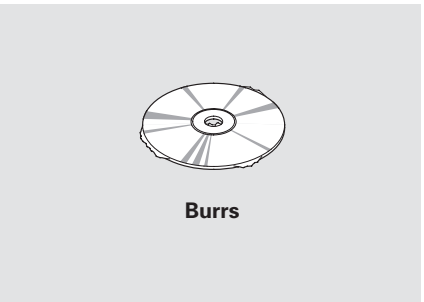

4. Small, irregular shaped discs

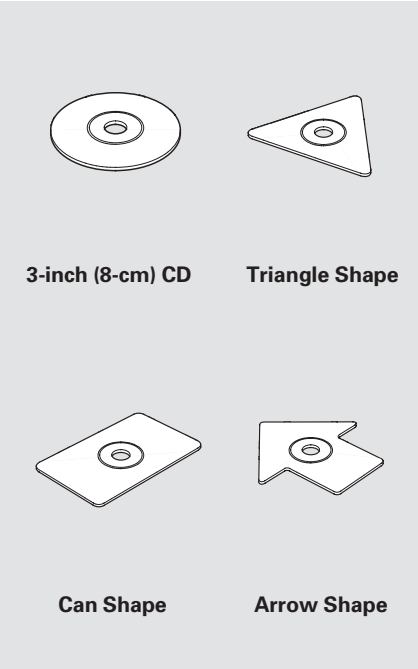

5. Discs with scratches, dirty discs

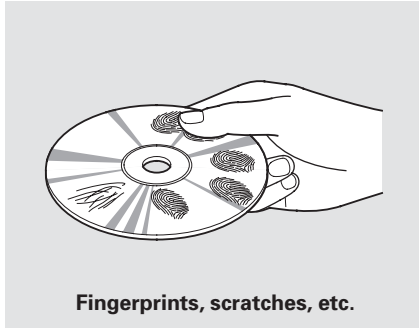

- CD-R or CD-RW may not play due to the recording conditions.
- Scratches and fingerprints on the discs may cause the sound to skip.

- Recommended discs are printed with the following logo.

- Audio unit may not play the following formats.

- This audio unit cannot play a Dual-disc®.

FM/AM Radio Reception

FM/AM Radio Frequencies
The radio can receive the complete AM and FM bands.
Those bands cover these frequencies:

AM band: 530 to 1,710 kHz
FM band: 87.7 to 107.9 MHz

Radio stations on the AM band are assigned frequencies at least 10 kHz apart (530, 540, 550). Stations on the FM band are assigned frequencies at least 0.2 MHz apart (87.9, 88.1, 88.3).

Stations must use these exact frequencies. It is fairly common for stations to round-off the frequency in their advertising, so your radio could display a frequency of 100.9 even though the announcer may identify the station as “FM101.”

Radio Reception
How well the radio receives stations is dependent on many factors, such as the distance from the station’s transmitter, nearby large objects, and atmospheric conditions.

A radio station’s signal gets weaker as you get farther away from its transmitter. If you are listening to an AM station, you will notice the sound volume becoming weaker, and the station drifting in and out. If you are listening to an FM station, you will see the stereo indicator flickering off and on as the signal weakens. Eventually, the stereo indicator will go off and the sound will fade completely as you get out of range of the station’s signal.

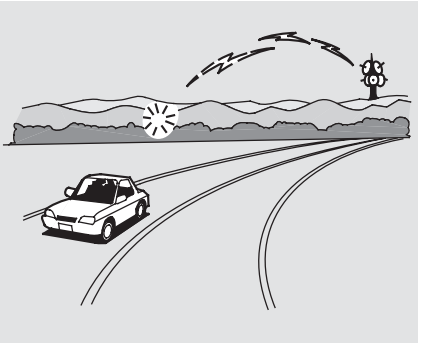

Driving very near the transmitter of a station that is broadcasting on a frequency close to the frequency of the station you are listening to can also affect your radio’s reception. You may temporarily hear both stations, or hear only the station you are close to.

FM/AM Radio Reception

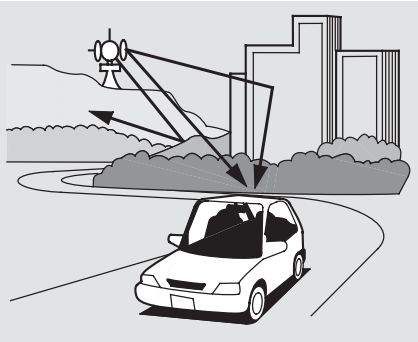

Radio signals, especially on the FM band, are deflected by large objects such as buildings and hills. Your radio then receives both the direct signal from the station's transmitter, and the deflected signal. This causes the sound to distort or flutter. This is a main cause of poor radio reception in city driving.

Radio reception can be affected by atmospheric conditions such as thunderstorms, high humidity, and even sunspots. You may be able to receive a distant radio station one day and not receive it the next day because of a change in conditions.

Electrical interference from passing vehicles and stationary sources can cause temporary reception problems.

As required by the FCC:
Changes or modifications not expressly approved by the party responsible for compliance could void the user's authority to operate the equipment.

Remote Audio Controls

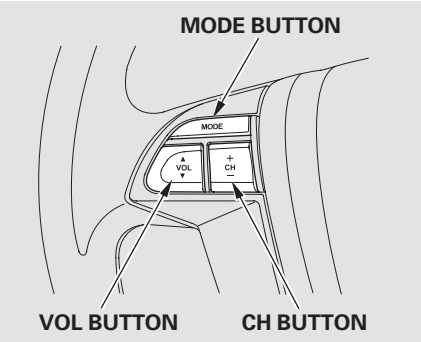

Three controls for the audio system are mounted in the steering wheel hub. These let you control basic functions without removing your hand from the wheel.

The VOL button adjusts the volume up (▲) or down (▼). Press the top or bottom of the button, hold it until the desired volume is reached, then release it.

The MODE button changes the mode. Pressing the button repeatedly selects FM1, FM2, AM, or disc (if a disc(s) is loaded). On models with XM Radio, you can also select XM1 and XM2.

If you are listening to the radio, use the CH button to change stations. Each time you press the top (+) of the button, the system goes to the next preset station on the band you are listening to. Press the bottom (−) to go back to the previous preset station. If you press and hold the CH button (+) or (−), the system goes into the skip (seek) mode. It stops when it finds a station with a strong signal.

If you are playing a disc, the system skips to the beginning of the next track (file in MP3 or WMA format) each time you press the top (+) of the CH button. Press the bottom (−) to return to the beginning of the current track/file. Press it twice to return to the previous track/file.

You will see the track/file number and the elapsed time. If the disc has text data or is compressed in MP3 or WMA, you can also see any other information (track title, file name, folder name, etc.).

In MP3 or WMA mode, you can use the skip function to select folders. Press and hold the top (+) of the CH button until you hear a beep, to skip forward to the first file in the next folder. Press the bottom (−) to skip backward to the previous folder.

If you are playing a conventional CD (without the text data and not compressed in MP3 or WMA), you can use the skip function to select discs. Press and hold the top (+) of the CH button until you hear a beep, to skip forward to the next disc. Press and hold the bottom (−) to skip backward to the previous disc.

Auxiliary Input Jack

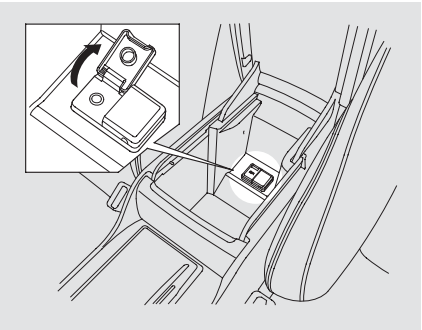

The auxiliary input jack is inside the console compartment. The system will accept auxiliary input from standard audio accessories using a 1/8 inch (3.5 mm) stereo miniplug.

When a compatible audio unit is connected to the jack, press the AUX or CD/AUX button to select it.

Radio Theft Protection

Your vehicle's audio system may disable itself if it is disconnected from electrical power for any reason. To make it work again, you must enter a specific five-digit code with the preset buttons. Because there are hundreds of number combinations possible from the five digits, making the system work without knowing the exact code is nearly impossible.

You should have received a radio code card that lists your audio system's code and serial numbers. It is best to store this card in a safe place at home. In addition, you should write the audio system's serial number in this owner's manual.

If you lose the card, you must obtain the code number from your dealer. To do this, you will need the audio system's serial number.

If your vehicle's battery is disconnected or goes dead, the audio system will disable itself. If this happens, you will see "ENTER CODE" in the frequency display (on the screen on models with navigation system) the next time you turn on the system. Use the preset buttons to enter the five-digit code. The code is on the radio code card included in your owner's manual kit. When it is entered correctly, the radio will start playing.

If you make a mistake entering the code, do not start over; complete the five-digit sequence, then enter the correct code. You have ten tries to enter the correct code. If you are unsuccessful in ten attempts, you must then leave the system on for 1 hour before trying again.

The system will retain your AM and FM presets even if power is disconnected.

On models without navigation system
To set the time, press the CLOCK button until you hear a beep. The displayed time begins to blink.

Change the hours by pressing the H (hour) button until the numbers advance to the desired time. Change the minutes by pressing the M (minute) button until the numbers advance to the desired time.

Press the CLOCK button again to enter the set time.

You can quickly set the time to the nearest hour. If the displayed time is before the half hour, press and hold the CLOCK button, then press the R (reset) button to set the time back to the previous hour. If the displayed time is after the half hour, the same procedure sets the time forward to the beginning of the next hour.

On models without navigation system

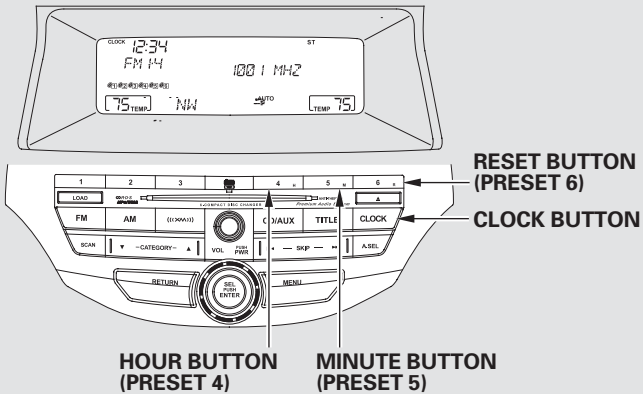

U.S. EX-L is shown.

For example:
- 1:06 would RESET to 1:00.
- 1:52 would RESET to 2:00.

On models with navigation system
The navigation system receives signals from the global positioning system (GPS), and the displayed time is updated automatically by the GPS. Refer to the navigation system manual for how to adjust the time.

CONTINUED

Setting the Clock

On models without navigation system

Adjusting the Clock with MENU Button

You can also adjust the clock and switch the clock display between 24-hours and 12-hours in the menu mode.

To adjust the clock setting:

1. Press and release the MENU button. The display shows you the menu items.

   You can adjust the clock setting with the ignition switch in the ACCESSORY (I) or ON (II) position.

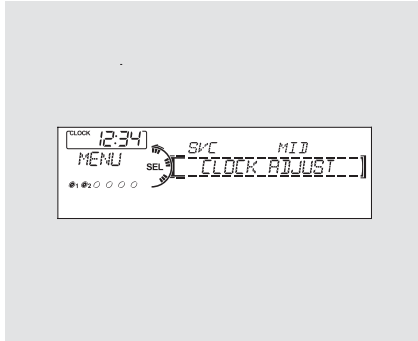

2. Turn the selector knob to select "CLOCK ADJUST."

3. Press the selector knob (ENTER) to enter your selection. The display changes to the clock adjusting display.

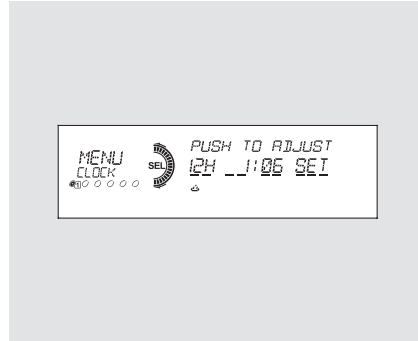

4. Turn the selector knob to select the item which you want to adjust. Turning the selector knob will change the selected item between the clock display setting, hours, minutes, and SET. The selected item is indicated with △ in the display.

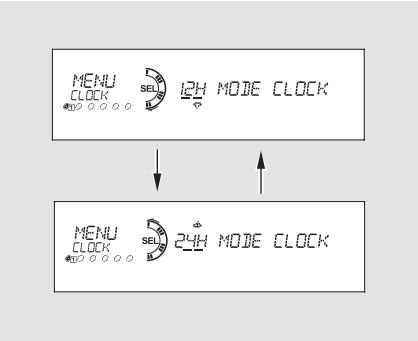

5. Turn the selector knob to change the setting between 12H and 24H.

6. Press the selector knob (ENTER) to enter your selection. The display will return to the clock adjusting display.

7. To set the time, turn the selector knob and select the hours or the minutes, then press the knob to enter your selection. The display changes to the setting display.

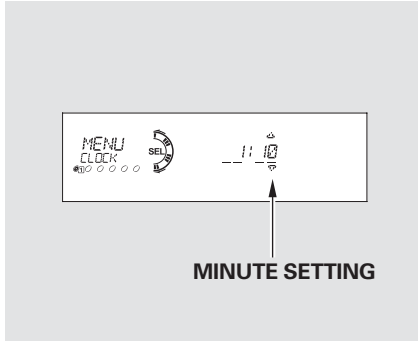

8. Turn the selector knob to count the numbers up or down.

9. Press the selector knob (ENTER) to enter your selection. The display will return to the clock adjusting display.

While setting the clock, pressing the RETURN button will go back to the previous display.
Pressing the MENU button again will cancel this setting mode.

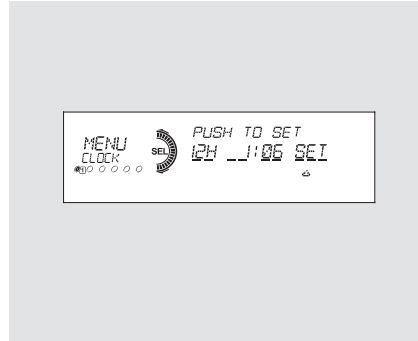

10. To enter the clock setting, turn the selector knob to select “SET,” then press the knob. The display will return to the menu item display.

11. Press either the RETURN or MENU button to go back to the normal display.

Security System

The security system helps to protect your vehicle and valuables from theft. The horn sounds and a combination of headlights, parking lights, side marker lights and taillights flashes if someone attempts to break into your vehicle or remove the audio unit. This alarm continues for two minutes, then the system resets. To reset an activated system before the two minutes have elapsed, unlock the driver's door with the key or the remote transmitter.

The security system automatically sets 15 seconds after you lock the doors, hood, and trunk. For the system to activate, you must lock the doors from the outside with the key, driver's lock tab, door lock master switch, or remote transmitter. The security system indicator on the instrument panel starts blinking immediately to show you the system is setting itself.

SECURITY SYSTEM INDICATOR

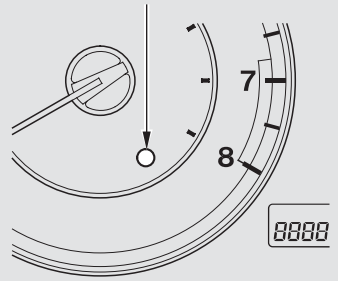

Once the security system is set, opening either door without using the key or the remote transmitter, the hood, or the trunk will cause the alarm to activate. It will also activate if the audio unit is removed from the dashboard or the wiring is cut.

With the system set, you can still open the trunk with the remote transmitter without triggering the alarm. The alarm will sound if the trunk lock is forced, or the trunk is opened with the trunk release lever or the emergency trunk opener.

The security system will not set if the hood, trunk, or either door is not fully closed. If the system will not set, turn the ignition switch to the ON (II) position, and check the indicators on the instrument panel. Close either door or the trunk indicated on the display. Check the hood visually since it is not part of the display, and shut it if necessary.

NOTE: Use the remote transmitter to quickly check that the hood, the trunk, and both doors are closed. Push the lock button twice within 5 seconds. There should be an audible confirmation beep.

Do not attempt to alter this system or add other devices to it.

Compass

EX-L and all V6 without navigation system

Compass Operation

Compass operation can be affected by driving near power lines or stations, across bridges, through tunnels, over railroad crossings, past large vehicles, or driving near large objects that can cause a magnetic disturbance. It can also be affected by accessories such as antennas and roof racks that are mounted by magnets.

When you turn the ignition switch to the ON (II) position, the compass is self-calibrating, then the compass display is shown in the display.

Compass Calibration

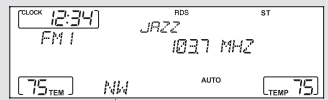

COMPASS

U.S. model is shown.

The compass may need to be manually calibrated after exposure to a strong magnetic field. If the compass seems to be continually showing the wrong direction and is not self-calibrating, or the compass display is blinking with the CAL indicator on, do the following.

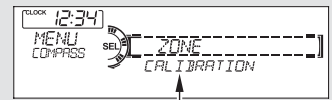

COMPASS SETTING MENU ITEMS

NOTE: Do this procedure in an open area, away from buildings, power lines, and other vehicles.

1. Turn the ignition switch to the ON (II) position.
2. Press and hold the MENU button for about 5 seconds until you hear a beep. The display shows you the compass setting menu items.

Compass

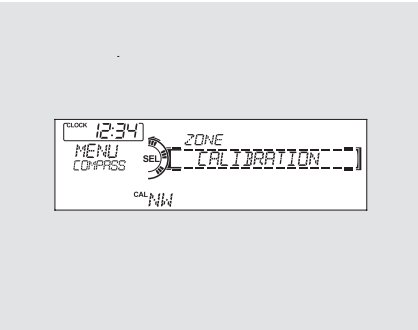

3. Turn the selector knob to select "CALIBRATION."

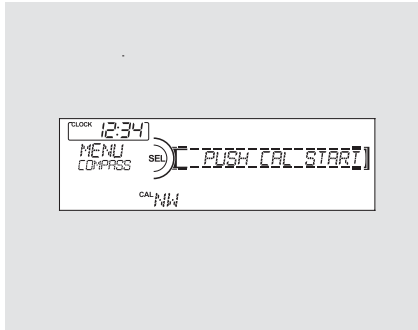

4. Press the selector knob (ENTER) to enter your selection. The display shows you "PUSH CAL START."

   While setting the compass, pressing the RETURN button will go back to the previous display. Pressing the MENU button will cancel the compass setting mode.

5. Press the selector knob (ENTER). The compass display is blinking and the CAL indicator is shown.

6. Drive the vehicle slowly in two complete circles.

When the calibration is successfully completed, the CAL indicator goes off and the compass display will stop blinking and show an actual heading.

The audio system is not related to the compass system. Even if the compass system is calibrating, the display returns to the normal display which you last selected.

Compass

Compass Zone Selection

In most areas, there is a variation between magnetic north and true north. Zone selection is required so the compass can compensate for this variation. To check and select the zone, do this:

1. Turn the ignition switch to the ON (II) position.

2. Press and hold the MENU button for about 5 seconds until you hear a beep. The display shows you the compass setting menu items.

3. Turn the selector knob to select "ZONE." Press the selector knob (ENTER) to enter your selection. The display shows you the currently selected zone number.

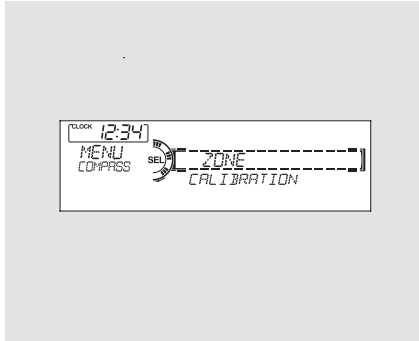

4. Find the zone for your area on the map (see page 209). If the correct zone is not shown, turn the selector knob to cycle the zone lists up or down.

   If necessary, press the RETURN button to return to the previous display. Pressing the MENU button will cancel the compass setting mode.

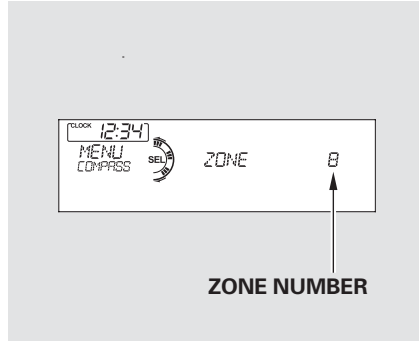

5. Once the correct zone is displayed, press the selector knob. The display then returns to normal.

Compass

The audio system is not related to the compass system. Even if the compass system is in the zone setting mode, the display returns to the normal display which you last selected.

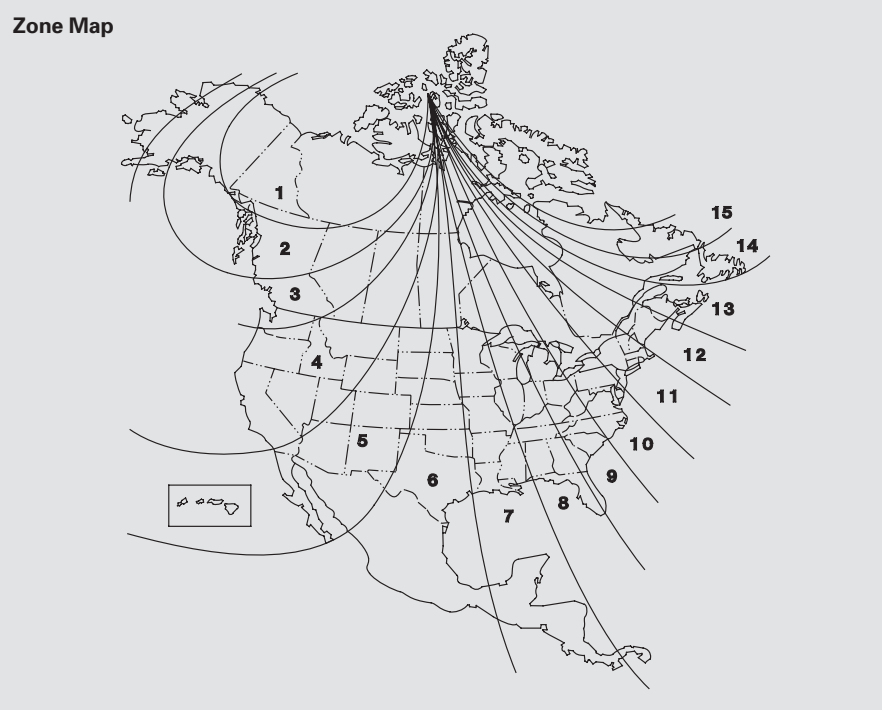

Cruise Control

Cruise control allows you to maintain a set speed above 25 mph (40 km/h) without keeping your foot on the accelerator pedal. It should be used for cruising on straight, open highways. It is not recommended for city driving, winding roads, slippery roads, heavy rain, or bad weather.

⚠WARNING

Improper use of the cruise control can lead to a crash.

Use the cruise control only when traveling on open highways in good weather.

Using Cruise Control

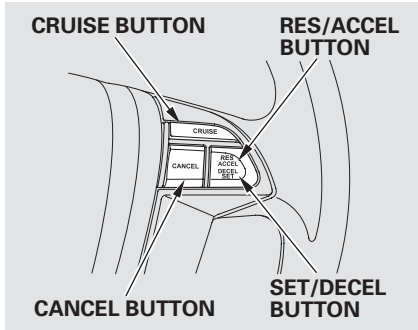

1. Push the CRUISE button on the steering wheel. The CRUISE MAIN indicator on the instrument panel comes on.

   The cruise control system can be left on, even when it is not in use.

2. Accelerate to the desired cruising speed above 25 mph (40 km/h).

3. Press and release the SET/DECEL button on the steering wheel. The CRUISE CONTROL indicator on the instrument panel comes on to show the system is now activated.

Cruise control may not hold the set speed when you are going up and down hills. If your vehicle speed increases going down a hill, use the brakes to slow down. This will cancel the cruise control. To resume the set speed, press the RES/ACCEL button. The CRUISE CONTROL indicator on the instrument panel will come back on.

Changing the Set Speed
You can increase the set cruising speed in any of these ways:

- Press and hold the RES/ACCEL button. When you reach the desired cruising speed, release the button.
- Push on the accelerator pedal. Accelerate to the desired cruising speed, then press the SET/DECEL button.
- To increase the speed in very small amounts, tap the RES/ACCEL button. Each time you do this, your vehicle will speed up about 1 mph (1.6 km/h).

You can decrease the set cruising speed in any of these ways:

NOTE: If you need to decrease your speed quickly, use the brakes as you normally would.

- Press and hold the SET/DECEL button. Release the button when you reach the desired speed.
- To slow down in very small amounts, tap the SET/DECEL button repeatedly. Each time you do this, your vehicle will slow down about 1 mph (1.6 km/h).
- Tap the brake or clutch pedal lightly with your foot. The CRUISE CONTROL indicator on the instrument panel will go out. When the vehicle slows to the desired speed, press the SET/DECEL button.

CONTINUED

Cruise Control

Even with the cruise control turned on, you can still use the accelerator pedal to speed up for passing. After completing the pass, take your foot off the accelerator pedal. The vehicle will return to the set cruising speed.

Resting your foot on the brake or clutch pedal causes the cruise control to cancel.

Canceling Cruise Control
You can cancel cruise control in any of these ways:

- Tap the brake or clutch pedal.
- Push the CANCEL button on the steering wheel.
- Push the CRUISE button on the steering wheel.

Resuming the Set Speed
When you push the CANCEL button, or tap the brake or clutch pedal, the system will remember the previously set cruising speed. To return to that speed, accelerate to above 25 mph (40 km/h), and then press and release the RES/ACCEL button. The CRUISE CONTROL indicator comes on. The vehicle will accelerate to the same cruising speed as before.

Pressing the CRUISE button turns the system completely off and erases the previous cruising speed.

HomeLink® Universal Transceiver

All V6 models
The HomeLink® universal transceiver built into your vehicle can be programmed to operate up to three remotely controlled devices around your home, such as garage doors, lighting, or home security systems.

General Information
Before programming your HomeLink to operate a garage door opener, confirm that the opener has an external entrapment protection system, such as an “electronic eye,” or other safety and reverse stop features.

If your garage door was manufactured before April 1, 1982, you may not be able to program HomeLink to operate it. These units do not have safety features that cause the motor to stop and reverse it if an obstacle is detected during closing, increasing the risk of injury. Do not use HomeLink with any garage door opener that lacks safety stop and reverse features.

Units manufactured between April 1, 1982 and January 1, 1993 may be equipped with safety stop and reverse features. If your unit does not have an external entrapment protection system, an easy test to confirm the function and performance of the safety stop and reverse feature is to lay a 2 × 4 under the closing door. The door should stop and reverse upon contacting the piece of wood.

As an additional safety feature, garage door openers manufactured after January 1, 1993 are required to have external entrapment protection systems, such as an electronic eye, which detect an object obstructing the door.

HomeLink® Universal Transceiver

Important Safety Precautions
Refer to the safety information that came with your garage door opener to test that the safety features are functioning properly. If you do not have this information, contact the manufacturer of the equipment.
Before programming HomeLink to a garage door or gate opener, make sure that people and objects are out of the way of the device to prevent potential injury or damage.
When programming a garage door opener, park just outside the garage.

Training HomeLink
Before you begin — If you just received your vehicle and have not trained any of the buttons in HomeLink before, you should erase any previously learned codes before training the first button. To do this, press and hold the two outside buttons on the HomeLink transceiver for about 10—20 seconds, until the red indicator flashes. Release the buttons, then proceed to step 1.

If you are training the second or third buttons, go directly to step 1.

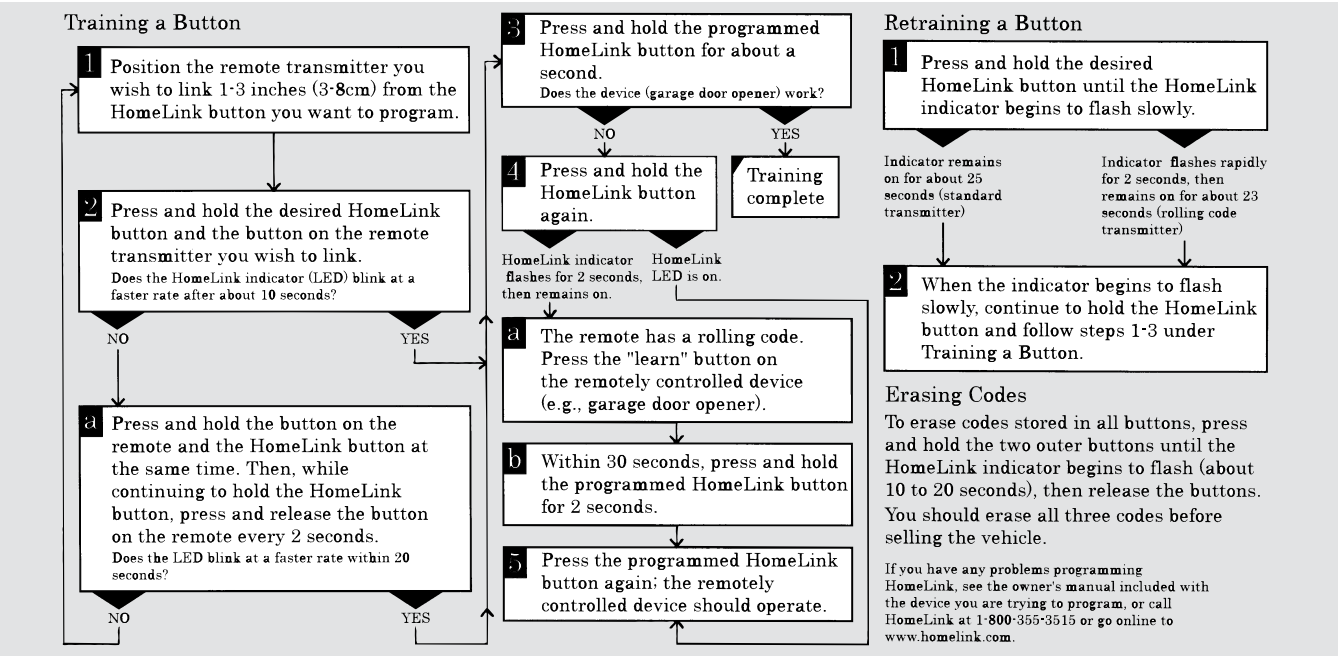

CONTINUED

HomeLink® Universal Transceiver

HomeLink® is a registered trademark of Johnson Controls, Inc.

As required by the FCC:
This device complies with Part 15 of the FCC rules. Operation is subject to the following two conditions: (1) This device may not cause harmful interference, and (2) this device must accept any interference received, including interference that may cause undesired operation.

Changes or modifications not expressly approved by the party responsible for compliance could void the user's authority to operate the equipment.

This device complies with Industry Canada Standard RSS-210.
Operation is subject to the following two conditions: (1) this device may not cause interference, and (2) this device must accept any interference that may cause undesired operation of the device.

If equipped

Bluetooth® HandsFreeLink® (HFL) allows you to place and receive phone calls using voice commands, without handling your cell phone.

To use HFL, you need a Bluetooth-compatible cell phone. For a list of compatible phones, pairing procedures, and special feature capabilities:

In the U.S., visit *handsfreelink.honda.com* or call (888) 528-7876.

In Canada, visit *www.honda.ca,* or call (888) 9-HONDA-9.

Using HFL

HFL Buttons

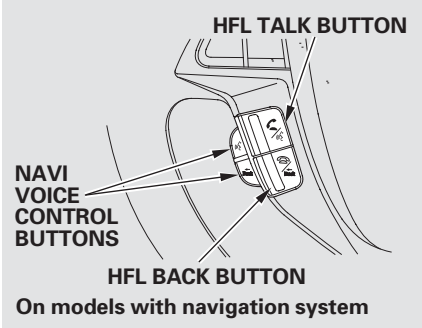

On models with navigation system

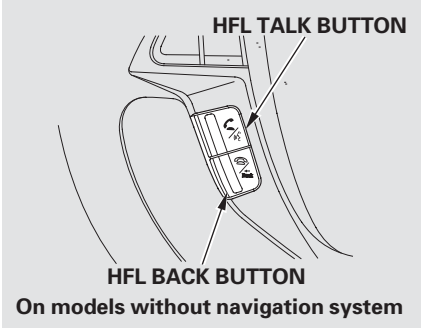

On models without navigation system

HFL Talk button — Press and release to give a command or answer a call.

HFL Back button — Press and release to end a call, go back to the previous command, or cancel the command.

CONTINUED

Voice Control Tips

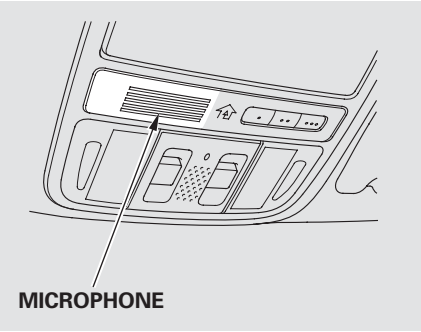

- Air or wind noise from the dashboard and side vents, windows and moonroof may interfere with the microphone. Adjust or close them as necessary.
- Press and release the HFL Talk button each time you want to make a command. After the beep, speak in a clear, natural tone.
- Try to reduce all background noise. If the microphone picks up voices other than yours, commands may be misinterpreted.
- Many commands can be spoken together. For example, you can say “Call 123-456-7890” or “Dial Peter.”
- When HFL is in use, navigation voice commands cannot be recognized.
- To change the volume level of HFL, use the audio system volume knob or the steering wheel volume controls.

Help Features

- To hear general HFL information, including help on pairing a phone or setting up the system, say "Tutorial."
- For help at any time, including a list of available commands, say "Hands free help."

Information Display

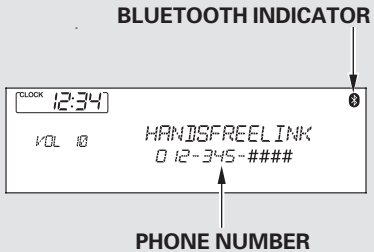

On models without navigation system

You will see "HANDSFREELINK" and the " " indicator on the audio display when you operate HFL.

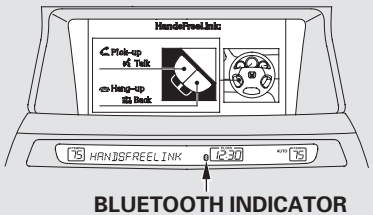

U.S. model with navigation system is shown.

On models with navigation system
A notification that there is an incoming call, or HFL is in use, will appear on the navigation screen when the audio system is on.

How to Use HFL

The ignition switch must be in the ACCESSORY (I) or ON (II) position.

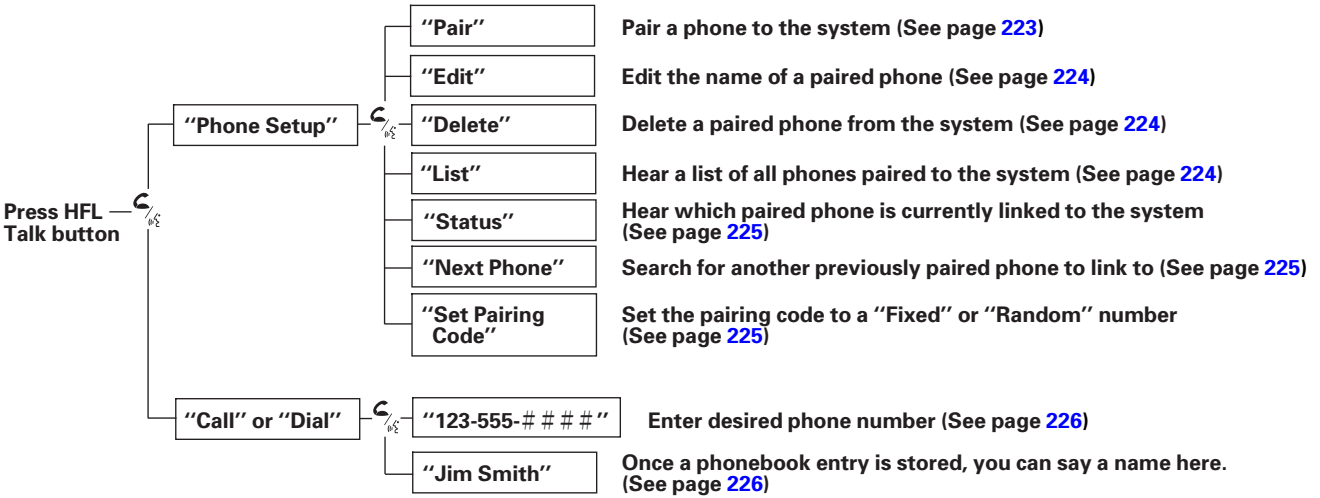

Press and release the HFL Talk button each time you give a command.

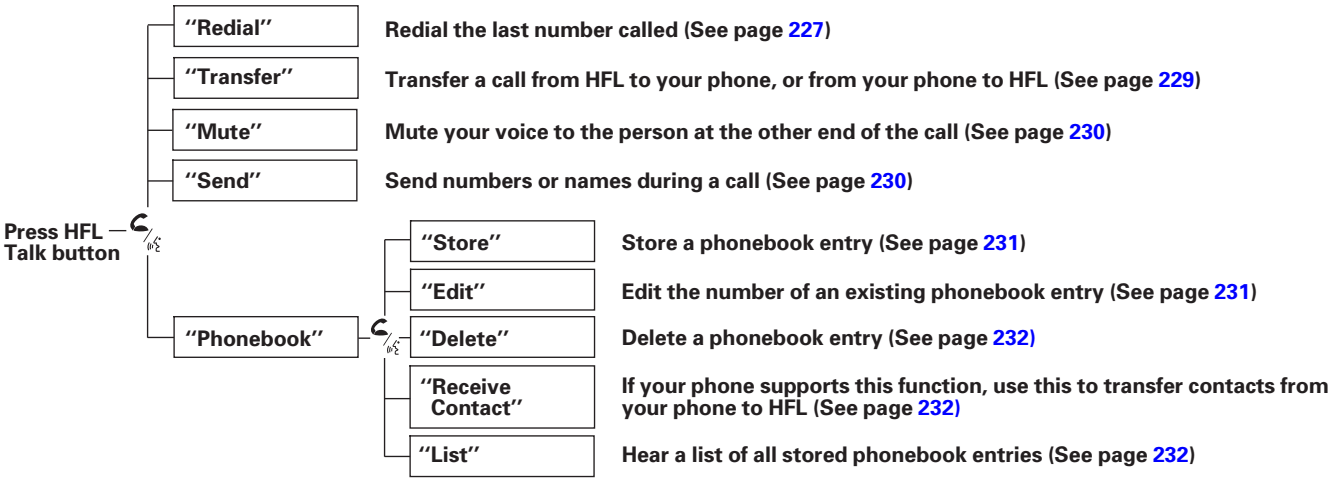

Press and release the HFL Talk button each time you give a command.

CONTINUED

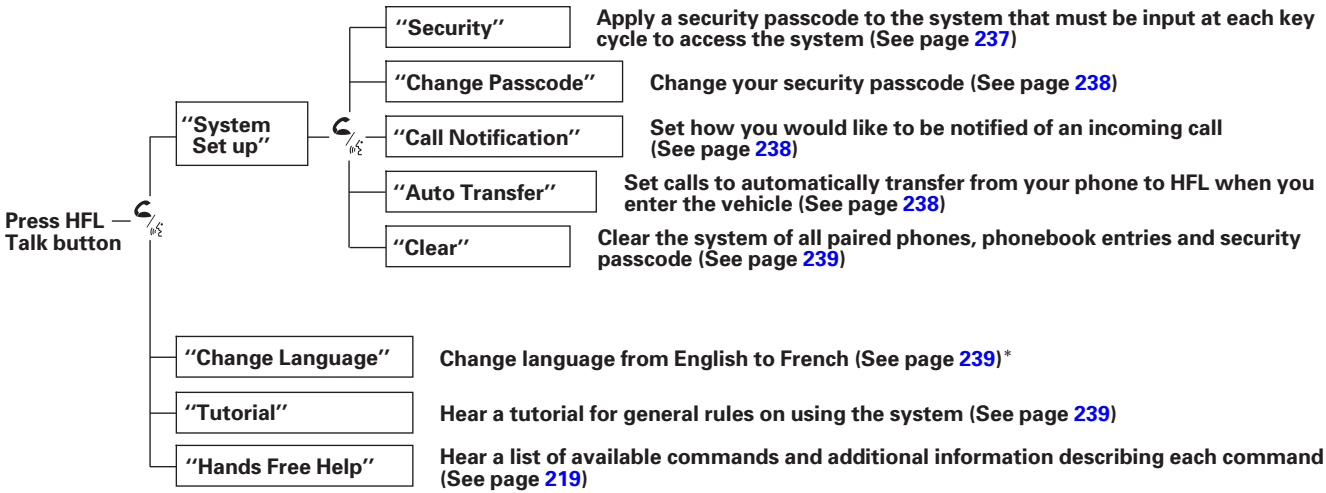

Press and release the HFL Talk button each time you give a command.

* : Canadian models

To use HFL, you need to pair your Bluetooth-compatible cell phone to the system.

Phone Setup
This command group is available for paired cell phones.

Phone pairing tips

- You cannot pair your phone while the vehicle is moving.
- Your phone must be in discovery or search mode to pair. Refer to your phone's manual.
- Up to six phones can be paired.
- Your phone's battery may drain faster when it is paired to HFL.
- If after three minutes your phone is not ready to pair or a phone is not found, the system will time out and return to idle.

To pair a cell phone:

1. Press and release the HFL Talk button. If you are pairing a phone for the first time, HFL will give you information about the pairing process. If it is not the first phone you are pairing, say "**Phone setup**" and say "**Pair**."
2. Follow the HFL prompts and put your phone in discovery or search mode. HFL will give you a 4-digit pairing code and begin searching for your phone.
3. When your phone finds a Bluetooth device, select HFL from the options and enter the 4-digit code from the previous step.
4. Follow the HFL prompts and name the newly paired phone.

CONTINUED

To rename a paired phone:
Press and release the HFL Talk button before a command.

1. Say "**Phone setup**."
2. Say "**Edit**" after the prompts.
3. If there is more than one phone paired to the system, HFL will ask you which phone's name you want to change. Follow the HFL prompts and rename the phone.

To delete a paired phone:
Press and release the HFL Talk button before a command.

1. Say "**Phone setup**."
2. Say "**Delete**" after the prompts.
3. HFL will ask you which phone you want to delete. Follow the HFL prompts to continue with the deletion.

To hear the names of all paired phones:
Press and release the HFL Talk button before a command.

1. Say "**Phone setup**."
2. Say "**List**" after the prompts.
3. HFL will read out all the paired phone's names.

To hear which paired phone is currently linked:
Press and release the HFL Talk button before a command.

1. Say "**Phone setup**."
2. Say "**Status**" after the prompts.
3. HFL will tell you which phone is linked to the system.

To change from the currently linked phone to another paired phone:
Press and release the HFL Talk button before a command.

1. Say "**Phone setup**."
2. Say "**Next phone**" after the prompts.
3. HFL disconnects the linked phone and searches for another paired phone.
4. Once another phone is found, it is linked to the system. HFL will inform you which phone is now linked.

If no other phones are found or paired, HFL will inform you that the original phone is linked again.

To change the pairing code setting:
Press and release the HFL Talk button before a command.

1. Say "**Phone setup**."
2. Say "**Set pairing code**" after the prompts.
3. If you want HFL to create a random code each time you pair a phone, say "**Random**." If you want to choose your own 4-digit code to be used each time, say "**Fixed**" and follow the HFL prompts.

Making a Call
You can make calls using any phone number or a name in the HFL phonebook. You can also redial the last number called.

Bluetooth is the wireless technology that links your phone to HFL. HFL uses a Class 2 Bluetooth, which means the maximum range between your phone and vehicle is 30 feet (10 meters).

During a call, HFL allows you to talk up to 30 minutes after you remove the key from the ignition switch. However, this may weaken the vehicle's battery.

To make a call using a phone number:
Press and release the HFL Talk button before a command.

1. Say "**Call**" or "**Dial**."
2. Follow the HFL prompts and say the phone number you want to dial.
3. Follow the HFL prompts to confirm the number and say "**Call**" or "**Dial**."

Once connected, you will hear the person you called through the audio speakers.

To make a call using a name in the HFL phonebook:
Press and release the HFL Talk button before a command.

1. Say "**Call**" or "**Dial**."
2. Follow the HFL prompts and say the name stored in the HFL phonebook that you want to call.
3. Follow the HFL prompts to confirm the name and make the call.

To redial the last number called by HFL:

Press and release the HFL Talk button and say "**Redial**."

To make a call from an imported phonebook:

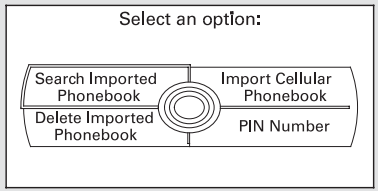

On models with navigation system

1. Press the INFO button, then select "**Cellular Phonebook**."

2. Select "**Search Imported Phonebook**."

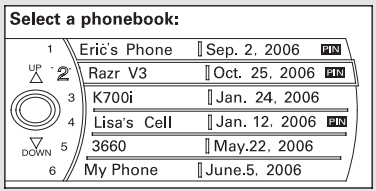

3. Select a phonebook you want to choose a phone number from.

If the phonebook you select is PIN-protected, you will need to enter the PIN to access it. See page 235 for more information.

CONTINUED

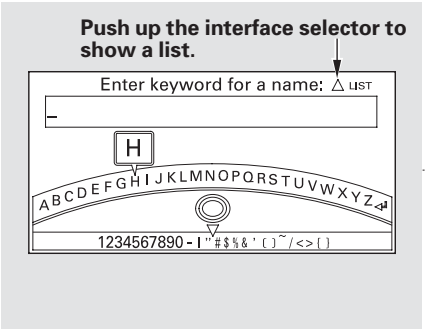

To search for a specific name in the phonebook, enter the keyword for either the first or last name.

To display all names in the phonebook, select the "**List**" option.

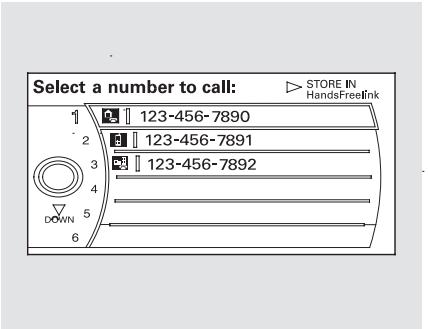

4. Select the name. All the phone numbers stored for that name will be listed.

5. Select the phone number, and push the interface selector to the right.

Selecting "**Store in HandsFreeLink**," the phone number will be stored in HFL, so that you can call it using HFL's name tag by voice.

Receiving a Call
When you receive a call, an incoming call notification (if activated) will play and interrupt the audio system if it is on.

Press the HFL Talk button to answer the call, or the HFL Back button to hang up.

Call Waiting
If your phone has Call Waiting, press and release the HFL Talk button to put the original call on hold and answer the incoming call.

To return to the original call, press the HFL Talk button again. If you don't want to answer the incoming call, disregard it and continue with your original call. If you want to hang up the original call and answer the new call, press the HFL Back button.

Transferring a Call
You can transfer a call from HFL to your phone, or from your phone to HFL.

Press and release the HFL Talk button and say "**Transfer**."

Muting a Call
You can mute your voice to the person you are talking to during a call.

To mute your voice during a call, press and release the HFL Talk button and say "**Mute**."

To unmute your voice, press and release the HFL Talk button and say "**Mute**" again.

Send Numbers or Names During a Call
HFL allows you to send numbers or names during a call. This is useful when you call a menu-driven phone system.

To send a name or number during a call:
Press and release the HFL Talk button before a command.

1. Say "**Send**."

2. Follow the HFL prompts and say the name or number you want to send.

3. Follow the HFL prompts to send the tones and continue the call.

NOTE: To send a pound (#), say "pound." To send a star (*), say "star."

Phonebook
You can store up to 50 names with their associated numbers in HFL. The numbers you store cannot only be phone numbers but other types, such as account numbers or passwords, which can be sent during a menu-driven call.

To store a phonebook entry:
Press and release the HFL Talk button before a command.

1. Say "**Phonebook**."
2. Say "**Store**" after the prompts.
3. Say a name you want to list as your phonebook entry.
4. Say the number you want to store for the name entry.
5. Follow the HFL prompts and say "**Enter**" to store the entry.

NOTE:
- Avoid using duplicate name entries.
- Avoid using "home" as a name entry.
- It is easier for HFL to recognize a multisyllabic or longer name. For example, use "Peter" instead of "Pete," or "John Smith" instead of "John."

To edit the number stored in a name:
Press and release the HFL Talk button before a command.

1. Say "**Phonebook**."
2. Say "**Edit**" after the prompts.
3. Follow the HFL prompts and say the name entry you want to edit.
4. When asked, say the new number for that name.
5. Follow the HFL prompts to complete the edit.

CONTINUED

To delete a name:
Press and release the HFL Talk button before a command.

1. Say "**Phonebook**."
2. Say "**Delete**" after the prompts.
3. Say the name you want to delete and follow the HFL prompts to complete the deletion.

To list all names in the phonebook:
Press and release the HFL Talk button before a command.

1. Say "**Phonebook**."
2. Say "**List**" after the prompts.
3. HFL begins reading the names in the order they were stored.
4. If you hear a name you want to call, immediately press the HFL Talk button and say "**Call**."

To store a specific phone number from your cell phone directly to the HFL phonebook (available on some phones):
Press and release the HFL Talk button before a command.

1. Say "**Phonebook**."
2. Say "**Receive contact**" after the prompts.
3. Follow the HFL prompts, select a number from your cell phone, and send it to HFL.
4. Follow the HFL prompts and name the number, or say "**Discard**" if it is not the number you want to store.
5. Follow the HFL prompts if you want to store another number.

Cellular Phonebook
(available on some phones)

On models with navigation system
If you select **Cellular Phonebook** from the Information screen menu, you will see four HFL options.

For a list of cell phones that are compatible with this feature:

In the U.S., visit *handsfreelink.honda.com* or call (888) 528-7876.

In Canada, visit *www.honda.ca,* or call (888) 9-HONDA-9.

Import Cellular Phonebook:
The entire phonebook data of the cell phone that is linked to HFL can be imported to the navigation system.

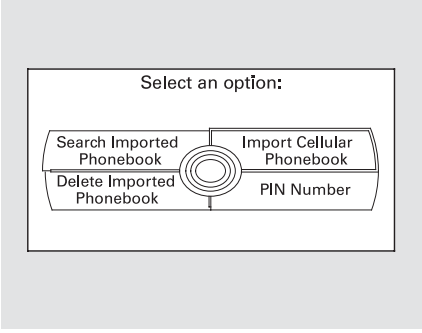

Select "**Import Cellular Phonebook**," and HFL will begin importing the phonebook. Select "**OK**" after the import is completed.

Search Imported Phonebook:
Once a phonebook has been imported, you can search the phone numbers by the person's name.

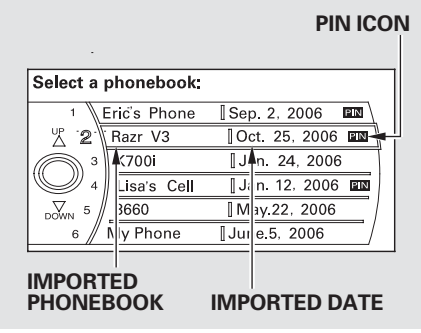

Select "**Search Imported Phonebook**," and a list of imported phonebooks will be displayed.

Select a phonebook from the list.

CONTINUED

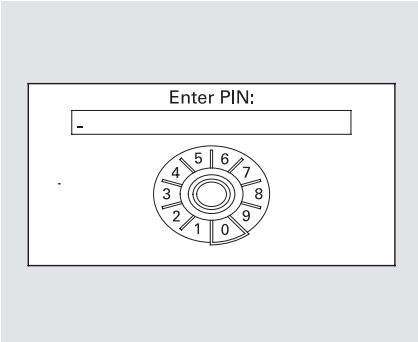

If the phonebook is PIN-protected, you will need to enter the 4-digit PIN.

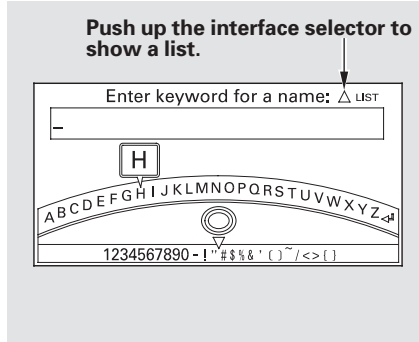

To search for a specific name in the phonebook, enter the keyword for either the first or last name.

To display all names in the phonebook, select the "**List**" option.

Select a person from the list. Up to three category icons are displayed in the left side of the list:

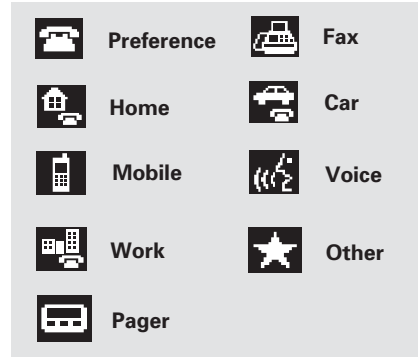

These indicate how many numbers are stored for the name. If a name has more than three category icons, "…" is displayed.

Select the person's number you want to call, and press the HFL Talk button.

Delete Imported Phonebook:
You can delete any imported phonebook.

Select "**Delete Imported Phonebook**," and a list of imported phonebooks will be displayed.

Select a phonebook you want to delete. If the phonebook is PIN-protected, you will need to enter the 4-digit PIN number.

After making a selection, the following screen will appear.

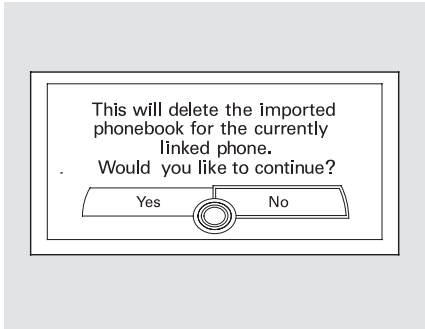

Select "**Yes**," then "**OK**" to complete the deletion.

PIN Number
You can add, change, or remove a PIN number from any phonebook.

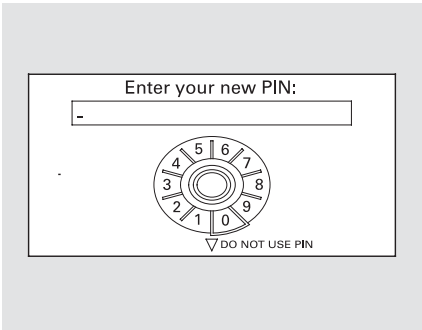

To add a PIN:
If you have selected a phonebook without a PIN, you will see the above display.

Enter the new 4-digit PIN. You will have to re-enter the PIN for confirmation.

CONTINUED

To change the PIN to a new number:

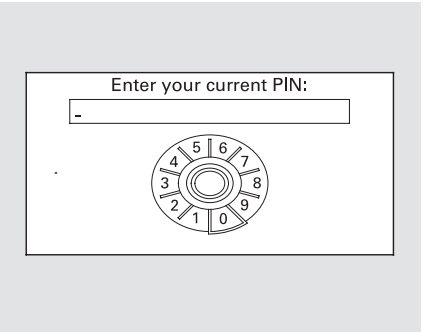

Select the phonebook you want. The display will change as shown above.

Enter the current PIN for this phonebook.

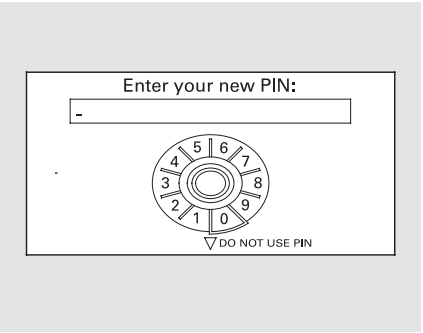

The display will change as shown above.

Enter the new 4-digit PIN number. You will be asked to re-enter the PIN for verification.

To remove a PIN:
Select "**PIN number**," then select "**Do not use PIN**" after you enter the current PIN.

System Setup
This command group allows you to change or customize HFL basic settings.

To set a 4-digit passcode to lock the HFL system for security purposes:
Press and release the HFL Talk button before a command.

1. Say "**System setup**."
2. Say "**Security**"after the prompts.
3. Follow the HFL prompts and say the 4-digit passcode you want to set.
4. Follow the HFL prompts to confirm the number.

NOTE: Once a passcode is set, you will need to enter it to use HFL each time you start the vehicle. If you forget the code, your dealer will have to reset it for you, or you will have to clear the entire system (see page 239).

CONTINUED

To change your security passcode:
Press and release the HFL Talk button before a command.

1. Say "**System setup**."
2. Say "**Change passcode**" after the prompts.
3. Follow the HFL prompts and say the new 4-digit passcode.
4. Follow the HFL prompts to confirm the number.

To select either a ring tone or a prompt as the incoming call notification**:
Press and release the HFL Talk button before a command.

1. Say "**System setup**."
2. Say "**Call notification**" after the prompts.
3. Follow the HFL prompts and say "**Ring tone**" or "**Prompt**." You can also say "**Off**" for no audible incoming call notification.

* : The default setting is a ring tone.

To activate or deactivate the auto transfer function:
If you get into the vehicle while you are on the phone, the call can be automatically transferred to HFL with the ignition switch in the ACCESSORY (I) position.

Press and release the HFL Talk button before a command.

1. Say "**System setup**."
2. Say "**Auto transfer**" after the prompts.
3. HFL will let you know if auto transfer is on or off, depending on the previous setting. Follow the HFL prompts to change the setting.

To clear the system:
This operation clears the passcodes, paired phones, all names in the HFL phonebook, and all imported phonebook data.

Press and release the HFL Talk button before a command.

1. Say "**System setup**."

2. Say "**Clear**" after the prompts.

3. Follow the HFL prompts to continue to complete the clearing procedure.

You can also clear the system when you have forgotten the passcode and cannot access HFL. When HFL asks you for the passcode, say "**System clear**." Paired phones, all names in the HFL phonebook and all imported phonebook data will be lost.

Quick Language Selection

Canadian models only

To quickly change the language:
Press and release the HFL Talk button before a command.

1. Say the language you want to change to in that language.

2. Follow the HFL prompts.

Change Language

Canadian models only

To change the system language between English and French:
Press and release the HFL Talk button before a command.

1. Say "**Change language**."

2. Follow the HFL prompts to change the language to English or French.

If you have not named your paired phone in the language you just selected, HFL will ask you to name it in the current language.

When French is your currently selected language, you can give voice commands in French.

***Bluetooth*® Wireless Technology**

The *Bluetooth*® name and logos are registered trademarks owned by Bluetooth SIG, Inc. and any use of such marks by Honda Motor Co., Ltd. is under license. Other trademarks and trade names are those of their respective owners.

As required by the FCC:
This device complies with Part 15 of the FCC rules. Operation is subject to the following two conditions: (1) This device may not cause harmful interference, and (2) this device must accept any interference received, including interference that may cause undesired operation.

Changes or modifications not expressly approved by the party responsible for compliance could void the user's authority to operate the equipment.

This device complies with Industry Canada Standard RSS-210.
Operation is subject to the following two conditions: (1) this device may not cause interference, and (2) this device must accept any interference that may cause undesired operation of the device.

Before Driving

Before you begin driving your vehicle, you should know what gasoline to use and how to check the levels of important fluids. You also need to know how to properly store luggage or packages. The information in this section will help you. If you plan to add any accessories to your vehicle, please read the information in this section first.

Break-in Period 242
Fuel Recommendation 242
Service Station Procedures 243
Refueling..... 243
Check Fuel Cap Message..... 245
Opening and Closing the Hood 246
Oil Check 248
Engine Coolant Check 249
Fuel Economy 250
Accessories and Modifications 253
Carrying Cargo 255

Break-in Period, Fuel Recommendation

Break-in Period

Help assure your vehicle's future reliability and performance by paying extra attention to how you drive during the first 600 miles (1,000 km). During this period:

- Avoid full-throttle starts and rapid acceleration.
- Avoid hard braking for the first 200 miles (300 km).
- Do not change the oil until the scheduled maintenance time.
- Do not tow a trailer.

You should also follow these recommendations with an overhauled or exchanged engine, or when the brakes are replaced.

Fuel Recommendation

Your vehicle is designed to operate on unleaded gasoline with a pump octane number of 87 or higher. Use of a lower octane gasoline can cause a persistent, heavy metallic rapping noise that can lead to engine damage.

On models with manual transmission
You may hear a knocking noise from the engine if you drive the vehicle at low engine speed (below about 1,000 rpm) in a higher gear. To stop this, raise the engine speed by shifting to a lower gear.

We recommend using quality gasolines containing detergent additives that help prevent fuel system and engine deposits.

In addition, in order to maintain good performance, fuel economy, and emissions control, we strongly recommend, in areas where it is available, the use of gasoline that does NOT contain manganese-based fuel additives such as MMT.

Use of gasoline with these additives may adversely affect performance, and cause the malfunction indicator lamp on your instrument panel to come on. If this happens, contact your authorized dealer for service.

Fuel Recommendation, Service Station Procedures

Some gasoline today is blended with oxygenates such as ethanol or MTBE. Your vehicle is designed to operate on oxygenated gasoline containing up to 10% ethanol by volume and up to 15% MTBE by volume. Do not use gasoline containing methanol.

If you notice any undesirable operating symptoms, try another service station or switch to another brand of gasoline.

For further important fuel-related information for your vehicle, or information on gasoline that does not contain MMT, visit Owner Link at *owners.honda.com*. In Canada, visit *www.honda.ca* for additional information on gasoline.

Refueling

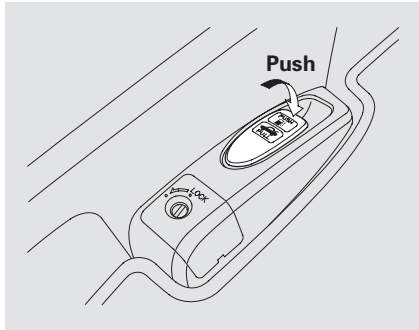

1. Park with the driver's side closest to the service station pump.
2. To open the fuel fill door, push down on the lever located to the left of the driver's seat.

⚠ WARNING

Gasoline is highly flammable and explosive. You can be burned or seriously injured when handling fuel.

- Stop the engine, and keep heat, sparks, and flame away.
- Handle fuel only outdoors.
- Wipe up spills immediately.

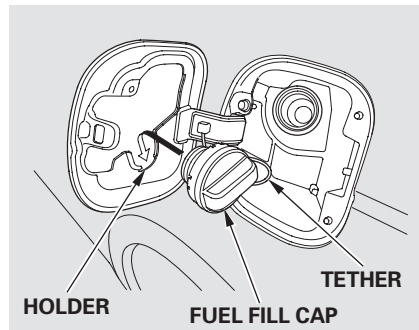

CONTINUED

Service Station Procedures

3. Remove the fuel fill cap slowly. You may hear a hissing sound as pressure inside the tank equalizes. The fuel fill cap is attached to the fuel filler with a tether. Place the cap in the holder on the fuel fill door.

4. Stop filling the tank after the fuel nozzle automatically clicks off. Do not try to "top off" the tank. This leaves some room in the fuel tank for the fuel to expand with temperature changes.

   If the fuel nozzle keeps clicking off even though the tank is not full, there may be a problem with your vehicle's fuel vapor recovery system. The system helps keep fuel vapor from going into the atmosphere. Try filling at another pump. If this does not fix the problem, consult your dealer.

5. Screw the fuel fill cap back on until it clicks at least once. If you do not properly tighten the cap, you will see a "CHECK FUEL CAP" message on the information display. If the system still detects an evaporative system leak after retightening the cap, the malfunction indicator lamp may come on (see page 356).

6. Push the fuel fill door closed until it latches.

Check Fuel Cap Message

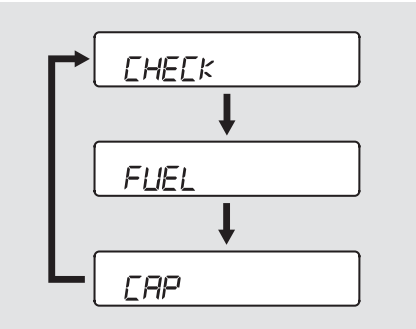

Your vehicle's onboard diagnostic system will detect a loose or missing fuel fill cap as an evaporative system leak. The first time a leak is detected a "CHECK FUEL CAP" message appears on the information display.

Turn the engine off, and confirm the fuel fill cap is installed. If it is, loosen it, then retighten it until it clicks at least once. The message should go off after several days of normal driving once you tighten or replace the fuel fill cap. To scroll to another display, press the select/reset knob.

The "CHECK FUEL CAP" message will appear each time you restart the engine until the system turns the message off.

If the system still detects a leak in your vehicle's evaporative emissions system, the malfunction indicator lamp (MIL) comes on. If the fuel fill cap was not already tightened, turn the engine off, and check or retighten the fuel fill cap until it clicks at least once. The MIL should go off after several days of normal driving once the cap is tightened or replaced. If the MIL does not go off, have your vehicle inspected by a dealer. For more information, see page 356.

Service Station Procedures

Opening and Closing the Hood

1. Park the vehicle, and set the parking brake. Pull the hood release handle located under the lower left corner of the dashboard. The hood will pop up slightly.

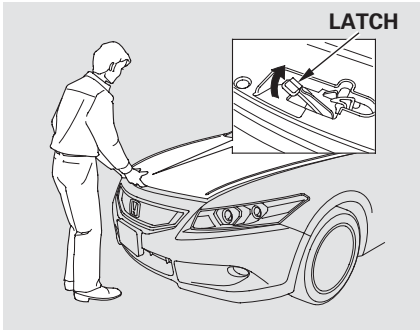

2. Reach in between the hood and the front grille with your fingers. The hood latch handle is above the “H” logo. Push this handle up until it releases the hood. Lift the hood.

If the hood latch handle moves stiffly, or if you can open the hood without lifting the handle, the mechanism should be cleaned and lubricated.

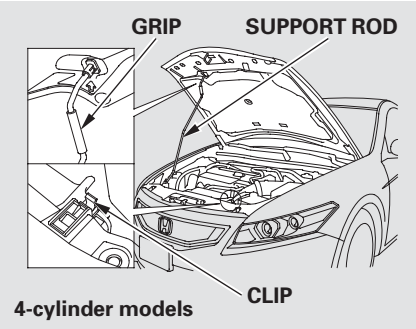

4-cylinder models

3. *4-cylinder models*
   Holding the grip, pull the support rod out of its clip. Insert the end into the hole in the hood designated by an arrow.

To close the hood, lift it up slightly to remove the support rod from the hole. Put the support rod back into its holding clip. Lower the hood to about a foot (30 cm) above the fender, then let it drop. Make sure it is securely latched.

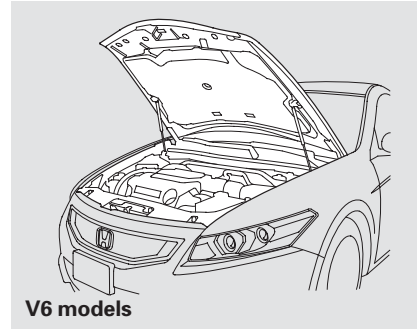
V6 models

V6 models
Lift the hood up most of the way. The hydraulic supports will lift it up the rest of the way and hold it up.

To close the hood, lower it to about a foot (30 cm) above the fender, then press down firmly with your hands. Make sure the hood is securely latched.

Service Station Procedures

Oil Check

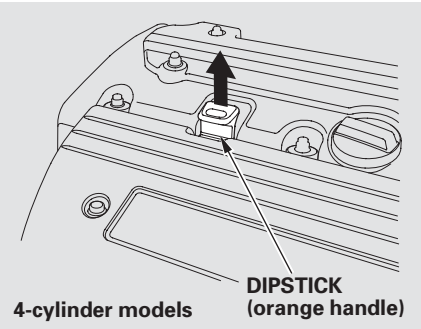

Wait a few minutes after turning the engine off before you check the oil.

1. Remove the dipstick (orange handle/loop).

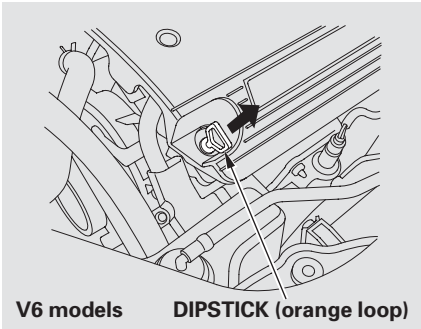

2. Wipe off the dipstick with a clean cloth or paper towel.

3. Insert the dipstick all the way back into its hole.

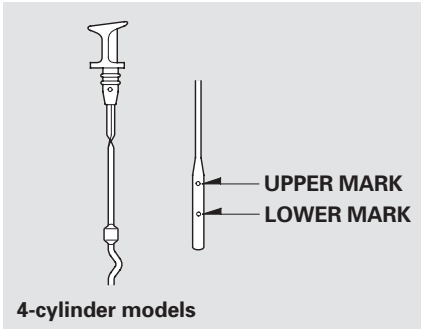

4. Remove the dipstick again, and check the level. It should be between the upper and lower marks.

If it is near or below the lower mark, see **Adding Engine Oil** on page 300 .

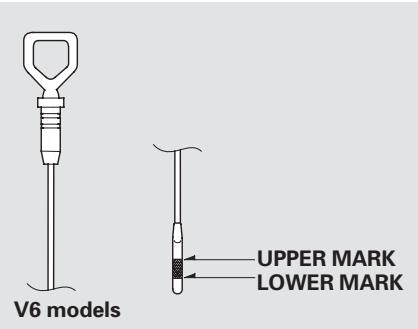

Engine Coolant Check

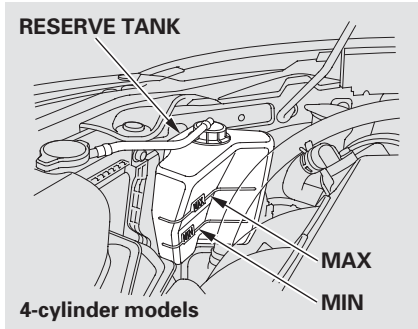

Look at the coolant level in the radiator reserve tank. Make sure it is between the MAX and MIN lines. If it is below the MIN line, see **Adding Engine Coolant** on page 304 for information on adding the proper coolant.

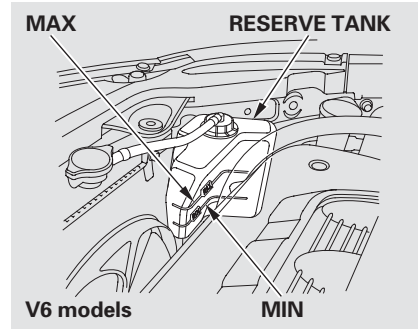

Refer to **Owner's Maintenance Checks** on page 296 for information about checking other items on your vehicle.

Fuel Economy

Actual Mileage and EPA Fuel Economy Estimates Comparison. Fuel economy is not a fixed number. It varies based on driving conditions, driving habits and vehicle condition. Therefore, it is not possible for one set of estimates to predict fuel economy precisely for all drivers in all environments.

The EPA fuel economy estimates shown in the example to the right are a useful tool for comparison when buying a vehicle. EPA estimates include:

City MPG — Represents urban driving in light traffic. A range of miles per gallon achieved is also provided.

Highway MPG — Represents a mixture of rural and interstate driving, in a warmed-up vehicle, typical of longer trips in free-flowing traffic. A range of miles per gallon achieved is also provided.

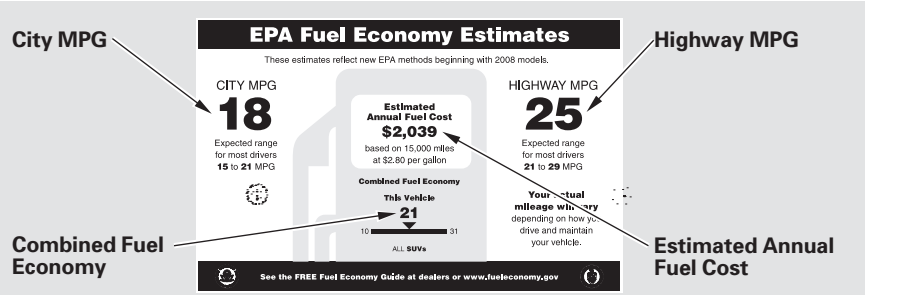

(Sample U.S. EPA label shown)

Combined Fuel Economy — Represents a combination of city and highway driving. The scale represents the range of combined fuel economy for other vehicles in the class.

Estimated Annual Fuel Cost — Provides an estimated annual fuel cost, based on 15,000 miles (20,000 km) per year multiplied by the cost per gallon (based on EPA fuel cost data) divided by the combined fuel economy.

For more information on fuel economy ratings and factors that affect fuel economy, visit *www.fueleconomy.gov* (Canada: Visit *www.vehicles.gc.ca*)

Fuel Economy Factors

The following factors can lower your vehicle's fuel economy:

- Aggressive driving (hard acceleration and braking)
- Excessive idling, accelerating and braking in stop-and-go traffic
- Cold engine operation (engines are more efficient when warmed up)
- Driving with a heavy load or the air conditioner running
- Improperly inflated tires

Improving Fuel Economy

Vehicle Maintenance

A properly maintained vehicle maximizes fuel economy. Poor maintenance can significantly reduce fuel economy. Always maintain your vehicle according to the maintenance messages displayed on the information display (see **Owner's Maintenance Checks** on page 296). For example:

- **Use the recommended viscosity motor oil, displaying the API Certification Seal (see page 301).**
- **Maintain proper tire inflation** — An underinflated tire increases "rolling resistance," which reduces fuel economy.
- **Avoid carrying excess weight in your vehicle** — It puts a heavier load on the engine, increasing fuel consumption.
- **Keep your vehicle clean** — In particular, a build-up of snow or mud on your vehicle's underside adds weight and rolling resistance. Frequent cleaning helps your fuel economy.

Drive Efficiently

- **Drive moderately** — Rapid acceleration, abrupt cornering, and hard braking increase fuel consumption.
- **Observe the speed limit** — Aerodynamic drag has a big effect on fuel economy at speeds above 45 mph (75 km/h). Reduce your speed and you reduce the drag. Trailers, car top carriers, roof racks and bike racks are also big contributors to increased drag.
- **Always drive in the highest gear possible** — If your vehicle has a manual transmission, you can boost your fuel economy by up shifting as early as possible.
- **Avoid excessive idling** — Idling results in 0 miles per gallon (0 kms per liter).

CONTINUED

Fuel Economy

- **Minimize the use of the air conditioning system** — The A/C puts an extra load on the engine which makes it use more fuel. Use the fresh-air ventilation when possible.

- **Plan and combine trips** — Combine several short trips into one. A warmed-up engine is more fuel efficient than a cold one.

Calculating Fuel Economy

Measuring Techniques
Direct calculation is the recommended source of information about your actual fuel economy. Using frequency of fill-ups or taking fuel gauge readings are NOT accurate measures of fuel economy. Fuel economy may improve over the first several thousand miles (kilometers).

Checking Your Fuel Economy

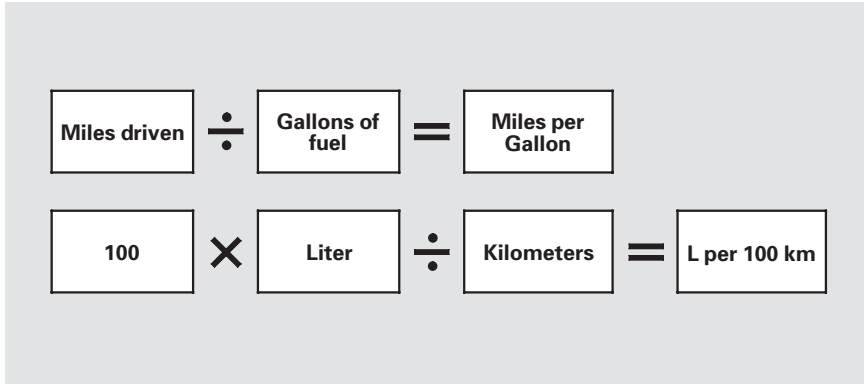

1) Fill the fuel tank until the nozzle automatically clicks off.
2) Reset trip counter to zero.
3) Record the total gallons (liters) needed to refill.
4) Follow one of the simple calculations above.

Accessories and Modifications

Modifying your vehicle, or installing some non-Honda accessories, can make your vehicle unsafe. Before you make any modifications or add any accessories, be sure to read the following information.

Accessories
Your dealer has Honda accessories that allow you to personalize your vehicle. These accessories have been designed and approved for your vehicle, and are covered by warranty.

Although non-Honda accessories may fit on your vehicle, they may not meet factory specifications, and could adversely affect your vehicle's handling and stability.

⚠ WARNING

Improper accessories or modifications can affect your vehicle's handling, stability, and performance, and cause a crash in which you can be hurt or killed.

Follow all instructions in this owner's manual regarding accessories and modifications.

When properly installed, cellular phones, alarms, two-way radios, and low-powered audio systems should not interfere with your vehicle's computer controlled systems, such as your airbags, anti-lock brakes, and tire pressure monitoring system.

Before installing any accessory:

- Make sure the accessory does not obscure any lights, or interfere with proper vehicle operation or performance.
- Be sure electronic accessories do not overload electrical circuits (see page 358) or interfere with the proper operation of your vehicle.
- Before installing any electronic accessory, have the installer contact your dealer for assistance. If possible, have your dealer inspect the final installation.
- Do not install accessories on the side pillars or across the rear windows. Accessories installed in these areas may interfere with proper operation of the side curtain airbags.

Accessories and Modifications

Modifying Your Vehicle
Removing parts from your vehicle, or replacing components with non-Honda components could seriously affect your vehicle's handling, stability, and reliability.

Some examples are:

- Lowering the vehicle with a non-Honda suspension kit that significantly reduces ground clearance can allow the undercarriage to hit speed bumps or other raised objects, which could cause the airbags to deploy.
- Raising your vehicle with a non-Honda suspension kit can affect the handling and stability.
- Non-Honda wheels, because they are a universal design, can cause excessive stress on suspension components and will not be compatible with the tire pressure monitoring system (TPMS).
- Larger or smaller wheels and tires can interfere with the operation of your vehicle's anti-lock brakes and other systems.
- Modifying your steering wheel or any other part of your vehicle's safety features can make the systems ineffective.

If you plan to modify your vehicle, consult your dealer.

Carrying Cargo

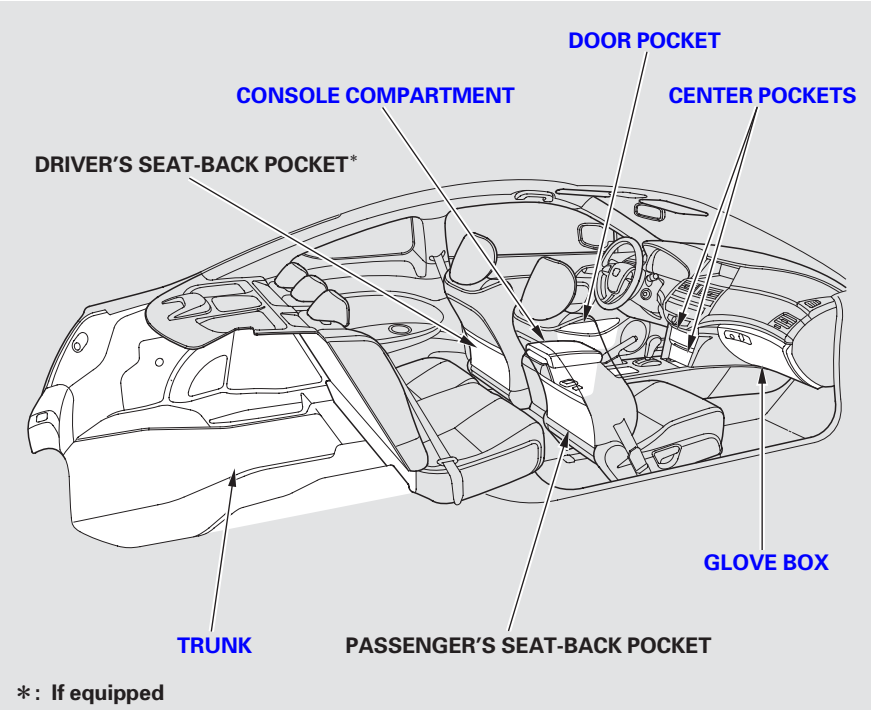

*: If equipped

Your vehicle has several convenient storage areas:

- Glove box
- Door and seat-back pockets
- Center pockets
- Console compartment
- Trunk, including the rear seat when folded down
- Roof-rack (if installed)

However, carrying too much cargo, or improperly storing it, can affect your vehicle's handling, stability, stopping distance, and tires, and make it unsafe. Before carrying any type of cargo, be sure to read the following pages.

Carrying Cargo

Load Limits
The maximum load for your vehicle is 850 lbs (385 kg).

See Tire And Loading Information label attached to the driver's doorjamb.

Label Example

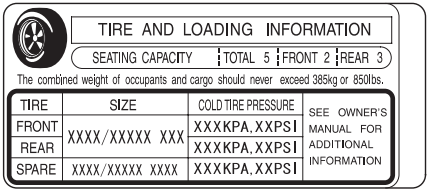

This figure includes the total weight of all occupants, cargo, and accessories, and the tongue load if you are towing a trailer.

⚠ WARNING

Overloading or improper loading can affect handling and stability and cause a crash in which you can be hurt or killed.

Follow all load limits and other loading guidelines in this manual.

Steps for Determining Correct Load Limit —

(1) Locate the statement "The combined weight of occupants and cargo should never exceed XXX kg or XXX lbs." on your vehicle's placard.

(2) Determine the combined weight of the driver and passengers that will be riding in your vehicle.

(3) Subtract the combined weight of the driver and passengers from XXX kg or XXX lbs.

(4) The resulting figure equals the available amount of cargo and luggage load capacity. For example, if the "XXX" amount equals 1,400 lbs. and there will be five 150 lb. passengers in your vehicle, the amount of available cargo and luggage load capacity is 650 lbs.
(1,400 − 750 (5 × 150) = 650 lbs.)

(5) Determine the combined weight of luggage and cargo being loaded on the vehicle. That weight may not safely exceed the available cargo and luggage load capacity calculated in Step 4.

(6) If your vehicle will be towing a trailer, load from your trailer will be transferred to your vehicle. Consult this manual to determine how this reduces the available cargo and luggage load capacity of your vehicle.

Example 1		≧		+	
	Max Load (850 lbs)		**Passenger Weight (150 lbs x 2 = 300 lbs)**		**Cargo Weight (550 lbs)**
Example 2		≧		+	
	Max Load (850 lbs)		**Passenger Weight (150 lbs x 4 = 600 lbs)**		**Cargo Weight (250 lbs)**
Example 3	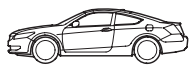	≧		+	
	Max Load (850 lbs)		**Passenger Weight (150 lbs x 5 = 750 lbs)**		**Cargo Weight (100 lbs)**

In addition, the total weight of the vehicle, all occupants, accessories, cargo, and trailer tongue load must not exceed the Gross Vehicle Weight Rating (GVWR) or the Gross Axle Weight Rating (GAWR). Both are on a label on the driver's doorjamb.

Carrying Cargo

Carrying Items in the Passenger Compartment

- Store or secure all items that could be thrown around and hurt someone during a crash.
- Do not put any items on top of the rear shelf. They can block your view and be thrown around the vehicle during a crash.
- Be sure items placed on the floor behind the front seats cannot roll under the seats and interfere with the driver's ability to operate the pedals, the operation of the seats, or the operation of the sensors under the seats.
- Keep all cargo below the bottom of the windows. If it is higher, it could interfere with the proper operation of the side curtain airbags.
- Keep the glove box closed while driving. If it is open, a passenger could injure their knees during a crash or sudden stop.

Carrying Cargo in the Trunk or on a Roof Rack

- Distribute cargo evenly on the floor of the trunk, placing the heaviest items on the bottom and as far forward as possible.
- If you fold down the back seat, tie down items that could be thrown about the vehicle during a crash or sudden stop.
- If you carry large items that prevent you from closing the trunk lid, exhaust gas can enter the passenger area. To avoid the possibility of **carbon monoxide poisoning**, follow the instructions on page 51 .

- If you carry any items on a roof rack, be sure the total weight of the rack and the items does not exceed the maximum allowable weight.

If you use an accessory roof rack, the roof rack weight limit may be lower. Refer to the information that came with your roof rack.

Cargo Net
Optional
The cargo net can be used to help hold down items stored in the trunk.

Driving

This section gives you tips on starting the engine under various conditions, and how to operate the manual and automatic transmissions. It also includes important information on parking your vehicle, the braking system, the vehicle stability assist (VSA®) system, the tire pressure monitoring system (TPMS), and facts you need if you are planning to tow a trailer.

Preparing to Drive 262
Starting the Engine..... 263
Manual Transmission..... 264
Automatic Transmission..... 267
Parking..... 272
Braking System..... 273
Anti-lock Brakes (ABS) 274
Vehicle Stability Assist (VSA®), aka Electronic Stability Control (ESC), System..... 276
Tire Pressure Monitoring System (TPMS) 278
Towing a Trailer 281

Preparing to Drive

You should do the following checks and adjustments before you drive your vehicle.

1. Make sure all windows, mirrors, and outside lights are clean and unobstructed. Remove frost, snow, or ice.

2. Check that the hood is fully closed.

3. Check that the trunk is fully closed.

4. Visually check the tires. If a tire looks low, use a gauge to check its pressure.

5. Check that any items you may be carrying are stored properly or fastened down securely.

6. *On vehicles with power adjustable seats*
   Check the seat adjustment (see page 92).

   On vehicles with manual adjustable seats
   Check the seat adjustment (see page 93).

7. Check the adjustment of the inside and outside mirrors (see page 102).

8. Check the steering wheel adjustment (see page 76).

9. Make sure the doors are securely closed and locked.

10. Fasten your seat belt. Check that your passengers have fastened their seat belts (see page 14).

11. When you start the engine, check the gauges and indicators in the instrument panel (see page 55).

Starting the Engine

1. Apply the parking brake.

2. In cold weather, turn off all electrical accessories to reduce the drain on the battery.

3. *Manual transmission:*
   Press the clutch pedal down all the way. The START (III) position does not function unless the clutch pedal is pressed.

   Automatic transmission:
   Make sure the shift lever is in Park. Press on the brake pedal.

4. Without touching the accelerator pedal, turn the ignition key to the START (III) position. Do not hold the key in the START (III) position for more than 15 seconds at a time. If the engine does not start right away, pause for at least 10 seconds before trying again.

NOTICE

The immobilizer system protects your vehicle from theft. If an improperly coded key (or other device) is used, the engine's fuel system is disabled. For more information, see page 78 .

NOTICE

The engine is harder to start in cold weather. Also, the thinner air found at altitudes above 8,000 feet (2,400 meters) adds to this problem.

Manual Transmission

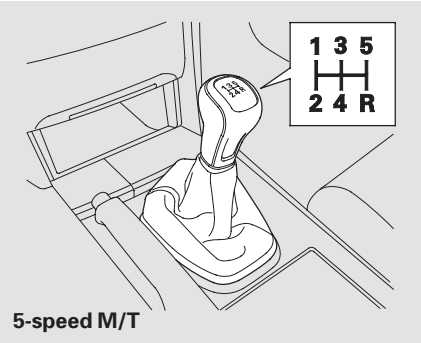

5-speed M/T

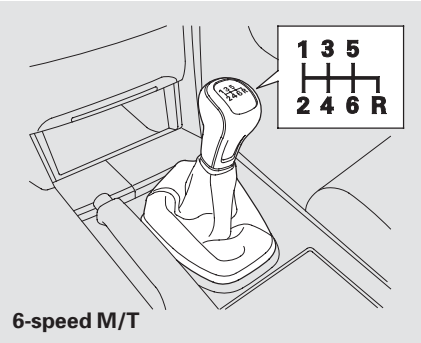

6-speed M/T

On models with 5-speed manual transmission, or models with 6-speed manual transmission
The manual transmission is synchronized in all forward gears for smooth operation. It has a lockout so you cannot shift directly from fifth to reverse.

On vehicles with 6-speed manual transmission, the lockout system prevents you from shifting directly from any forward gear to reverse while the vehicle is moving at a certain speed (see page 266).

When shifting up or down, make sure you push the clutch pedal down all the way, shift to the next gear, and let the pedal up gradually. When you are not shifting, do not rest your foot on the clutch pedal. This can cause your clutch to wear out faster.

Come to a full stop before you shift into reverse. You can damage the transmission by trying to shift into reverse with the vehicle moving. Push down the clutch pedal, and pause for a few seconds before shifting into reverse, or shift into one of the forward gears for a moment. This stops the gears so they won't "grind."

When slowing down, you can get extra braking from the engine by shifting to a lower gear. This extra braking can help you maintain a safe speed and prevent your brakes from overheating while going down a steep hill. Before downshifting, make sure the engine speed will not go into the tachometer's red zone in the lower gear.

⚠ WARNING

Rapid slowing or speeding up can cause loss of control on slippery surfaces. If you crash, you can be injured.

Use extra care when driving on slippery surfaces.

Recommended Shift Points

Drive in the highest gear that lets the engine run and accelerate smoothly. This will give you good fuel economy and effective emissions control. The following shift points are recommended:

On models with 5-speed manual transmission

Shift up	Normal acceleration
1st to 2nd	15 mph (25 km/h)
2nd to 3rd	25 mph (40 km/h)
3rd to 4th	40 mph (65 km/h)
4th to 5th	50 mph (80 km/h)

On models with 6-speed manual transmission

Shift up	Normal acceleration
1st to 2nd	15 mph (24 km/h)
2nd to 3rd	17 mph (27 km/h)
3rd to 4th	27 mph (43 km/h)
4th to 5th	36 mph (58 km/h)
5th to 6th	41 mph (66 km/h)

Manual Transmission

Engine Speed Limiter

If you exceed the maximum speed for the gear you are in, the engine speed will enter into the tachometer's red zone. If this occurs, you may feel the engine cut in and out. This is caused by a limiter in the engine's computer controls. The engine will run normally when you reduce the rpm below the red zone.

Before downshifting, make sure the engine will not go into the tachometer's red zone.

Reverse Lockout

6-speed manual transmission only

The manual transmission has a lockout so you cannot accidentally shift from any forward gear to reverse while the vehicle is moving at a certain speed. If you cannot shift to reverse when the vehicle is stopped, do the following:

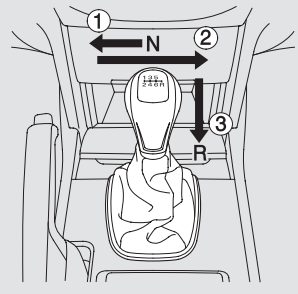

Move the shift lever in sequence.

1. With the clutch pedal pressed, move the shift lever to the first/second gear side of the neutral gate, then shift to reverse.
2. If you are still unable to shift to reverse, apply the parking brake, and turn the ignition key to the ACCESSORY (I) or LOCK (0) position.
3. Press the clutch pedal, and shift to reverse.
4. With the clutch pedal still pressed, start the engine.

If you need to use this procedure to shift to reverse, your vehicle may be developing a problem. Have it checked by your dealer.

Shift Lever Position Indicators

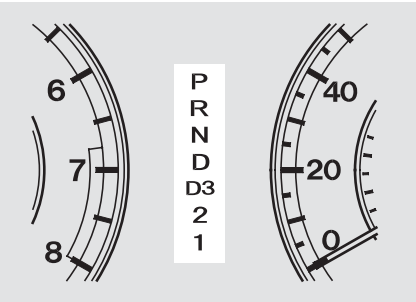

These indicators on the instrument panel show which position the shift lever is in.

The “D” indicator comes on for a few seconds when you turn the ignition switch to the ON (II) position. If it flashes while driving (in any shift position), it indicates a possible problem in the transmission.

If the malfunction indicator lamp comes on along with the “D” indicator, there is a problem with the automatic transmission control system. Avoid rapid acceleration, and have the transmission checked by your dealer as soon as possible.

Shifting

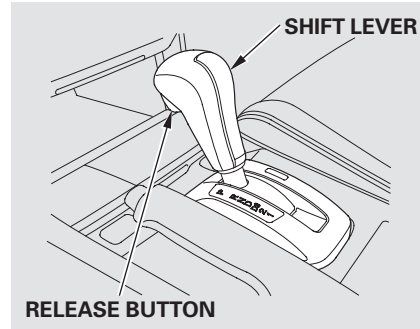

To shift from Park to any position, press firmly on the brake pedal, and press the release button on the front of the shift lever, then move the lever. You cannot shift out of Park when the ignition switch is in the LOCK (0) or ACCESSORY (I) position.

CONTINUED

Automatic Transmission

To shift from:	Do this:
P to R	Press the brake pedal and press the shift lever release button.
R to P N to R D to D3 D3 to 2 2 to 1	Press the shift lever release button.
1 to 2 2 to D3 D3 to D D to N N to D R to N	Move the shift lever.

Park (P) — This position mechanically locks the transmission. Use Park whenever you are turning off or starting the engine. To shift out of Park, you must press on the brake pedal and have your foot off the accelerator pedal. Press the release button on the front of the shift lever to move it.

If you have done all of the above and still cannot move the lever out of Park, see **Shift Lock Release** on page 270 .

To avoid transmission damage, come to a complete stop before shifting into Park. You must also press the release button to shift into Park. The shift lever must be in Park before you can remove the key from the ignition switch.

Reverse (R) — Press the brake pedal and the release button on the front of the shift lever to shift from Park to reverse. To shift from reverse to neutral, come to a complete stop, and then shift. Press the release button before shifting into reverse from neutral.

Neutral (N) — Use neutral if you need to restart a stalled engine, or if it is necessary to stop briefly with the engine idling. Shift to the Park position if you need to leave your vehicle for any reason. Press on the brake pedal when you are moving the shift lever from neutral to another gear.

Drive (D) — Use this position for your normal driving. The transmission automatically selects a suitable gear (1 through 5) for your speed and acceleration. You may notice the transmission shifting up at higher engine speeds when the engine is cold. This helps the engine warm up faster.

Drive (D3) — To shift from D to D3, press the shift lever release button. This position is similar to D, except only the first three gears are selected. Use D3 when towing a trailer in hilly terrain, or to provide engine braking when going down a steep hill. D3 can also keep the transmission from cycling between third and fourth gears in stop-and-go driving.

Second (2) — To shift to second, press the release button on the front of the shift lever. This position locks the transmission in second gear. It does not downshift to first gear when you come to a stop.

Use second gear:

- For more power when climbing.
- To increase engine braking when going down steep hills.
- For starting out on a slippery surface or in deep snow.
- To help reduce wheel spin.
- When driving downhill with a trailer.

First (1) — To shift from second to first, press the release button on the front of the shift lever. This position locks the transmission in first gear. By upshifting and downshifting through 1, 2, D3, and D, you can operate this transmission much like a manual transmission without a clutch pedal.

Automatic Transmission

Engine Speed Limiter
If you exceed the maximum speed for the gear you are in, the engine speed will enter into the tachometer's red zone. If this occurs, you may feel the engine cut in and out. This is caused by a limiter in the engine's computer controls. The engine will run normally when you reduce the rpm below the red zone.

Shift Lock Release
This allows you to move the shift lever out of Park if the normal method of pushing on the brake pedal and pressing the release button does not work.

1. Set the parking brake.

2. Remove the key from the ignition switch.

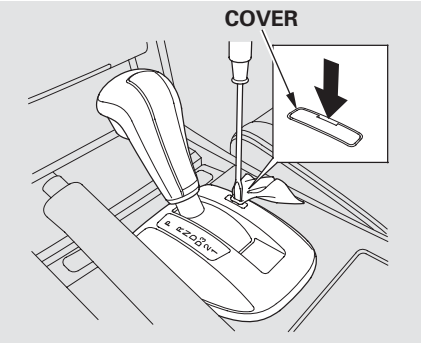

3. Put a cloth on the edge of the shift lock release slot cover to prevent scratches. Use a small flat-tip screwdriver or metal fingernail file to carefully pry up the edge of the cover and remove it from the slot.

4. Insert the key in the shift lock release slot.

Automatic Transmission

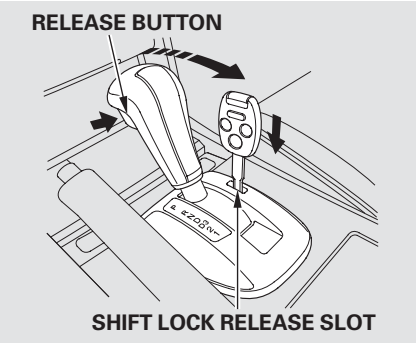

5. Push down on the key while you press the release button on the front of the shift lever and move the shift lever out of Park to neutral.

6. Remove the key from the shift lock release slot, then reinstall the cover. Make sure the notch on the cover is on the right side. Insert the key back into the ignition switch, press the brake pedal, and restart the engine.

If you need to use the shift lock release, it means your vehicle is developing a problem. Have it checked by your dealer.

Parking

Always use the parking brake when you park your vehicle. Make sure the parking brake is set firmly, or your vehicle may roll if it is parked on an incline.

If your vehicle has an automatic transmission, set the parking brake before you put the transmission in Park. This keeps the vehicle from moving and putting pressure on the parking mechanism in the transmission.

Parking Tips

- Make sure the moonroof (if equipped) and the windows are closed.
- Turn off the lights.
- Place any packages, valuables, etc., in the trunk or take them with you.
- Lock the doors.
- Check the indicator on the instrument panel to verify that the security system is set.
- Never park over dry leaves, tall grass, or other flammable materials. The hot three way catalytic converter could cause these materials to catch on fire.
- If the vehicle is facing uphill, turn the front wheels away from the curb. If your vehicle has a manual transmission, put it in first gear.
- If the vehicle is facing downhill, turn the front wheels toward the curb. If your vehicle has a manual transmission, put it in reverse gear.
- Make sure the parking brake is fully released before driving away. Driving with the parking brake partially set can overheat or damage the rear brakes.

Braking System

Your vehicle is equipped with disc brakes at all four wheels. A power assist helps reduce the effort needed on the brake pedal. The emergency brake assist system increases the stopping force when you depress the brake pedal hard in an emergency situation. The anti-lock brake system (ABS) helps you retain steering control when braking very hard.

Resting your foot on the pedal keeps the brakes applied lightly, builds up heat, reduces their effectiveness and reduces brake pad life. In addition, fuel economy can be reduced. It also keeps your brake lights on all the time, confusing drivers behind you.

Constant application of the brakes when going down a long hill builds up heat and reduces their effectiveness. Use the engine to assist the brakes by taking your foot off the accelerator and downshifting to a lower gear.

Check the brakes after driving through deep water. Apply the brakes moderately to see if they feel normal. If not, apply them gently and frequently until they do. Be extra cautious in your driving.

Braking System Design
The hydraulic system that operates the brakes has two separate circuits. Each circuit works diagonally across the vehicle (the left-front brake is connected with the right-rear brake, etc.). If one circuit should develop a problem, you will still have braking at two wheels.

Brake Pad Wear Indicators
The front and rear disc brakes on all models have audible brake pad wear indicators.

If the brake pads need replacing, you will hear a distinctive, metallic screeching sound when you apply the brake pedal. If you do not have the brake pads replaced, they will screech all the time. It is normal for the brakes to occasionally squeal or squeak when you apply them.

Anti-lock Brakes (ABS)

The anti-lock brake system (ABS) helps prevent the wheels from locking up, and helps you retain steering control by pumping the brakes rapidly, much faster than a person can do it.

The electronic brake distribution (EBD) system, which is part of the ABS, also balances the front-to-rear braking distribution according to vehicle loading.

You should never pump the brake pedal. Let the ABS work for you by always keeping firm, steady pressure on the brake pedal. This is sometimes referred to as “stomp and steer.”

You will feel a pulsation in the brake pedal when the ABS activates, and you may hear some noise. This is normal: it is the ABS rapidly pumping the brakes. On dry pavement, you will need to press on the brake pedal very hard before the ABS activates. However, you may feel the ABS activate immediately if you are trying to stop on snow or ice.

ABS Indicator

If this indicator comes on, the anti-lock function of the braking system has shut down. The brakes still work like a conventional system, but without anti-lock. You should have your dealer inspect your vehicle as soon as possible.

If the ABS indicator comes on while driving, test the brakes as shown on page 357 .

Anti-lock Brakes (ABS)

If the ABS indicator and the brake system indicator come on together, and the parking brake is fully released, the EBD system may also be shut down.

Test your brakes as instructed on page 357 . If the brakes feel normal, drive slowly and have your vehicle repaired by your dealer as soon as possible. Avoid sudden hard braking which could cause the rear wheels to lock up and possibly lead to a loss of control.

The VSA indicator will come on along with the ABS indicator.

Important Safety Reminders

ABS does not reduce the time or distance it takes to stop the vehicle. It only helps with the steering control during braking.

ABS will not prevent a skid that results from changing direction abruptly, such as trying to take a corner too fast or making a sudden lane change. Always drive at a safe speed for the road and weather conditions.

ABS cannot prevent a loss of stability. Always steer moderately when you are braking hard. Severe or sharp steering wheel movement can still cause your vehicle to veer into oncoming traffic or off the road.

A vehicle with ABS may require a longer distance to stop on loose or uneven surfaces, such as gravel or snow, than a vehicle without anti-lock.

Vehicle Stability Assist (VSA®), aka Electronic Stability Control (ESC), System

The vehicle stability assist (VSA) system helps to stabilize the vehicle during cornering if the vehicle turns more or less than desired. It also assists you in maintaining traction while accelerating on loose or slippery road surfaces. It does this by regulating the engine's output and by selectively applying the brakes.

When VSA activates, you may notice that the engine does not respond to the accelerator in the same way it does at other times. There may also be some noise from the VSA hydraulic system. You will also see the VSA activation indicator blink.

The VSA system cannot enhance the vehicle's driving stability in all situations and does not control your vehicle's entire braking system. It is still your responsibility to drive and corner at reasonable speeds and to leave a sufficient margin of safety.

VSA Activation Indicator

When VSA activates, you will see the VSA activation indicator blink.

VSA **Vehicle Stability Assist (VSA) System Indicator**

If this indicator comes on while driving, pull to the side of the road when it is safe, and turn off the engine. Reset the system by restarting the engine. If the VSA system indicator stays on or comes back on while driving, have the VSA system inspected by your dealer.

If the indicator does not come on when the ignition switch is turned to the ON (II) position, there may be a problem with the VSA system. Have your dealer inspect your vehicle as soon as possible.

NOTE: The main function of the VSA system is generally known as Electronic Stability Control (ESC). The system also includes a traction control function.

If the low tire pressure indicator or TPMS indicator comes on, the VSA system automatically turns on even if the VSA system is turned off by pressing the VSA OFF switch (see page 277). If this happens, you cannot turn the VSA system off by pressing the VSA OFF switch again.

Without VSA, your vehicle will have normal braking and cornering ability, but it will not have VSA traction and stability enhancement.

Vehicle Stability Assist (VSA®), aka Electronic Stability Control (ESC), System

VSA OFF Switch

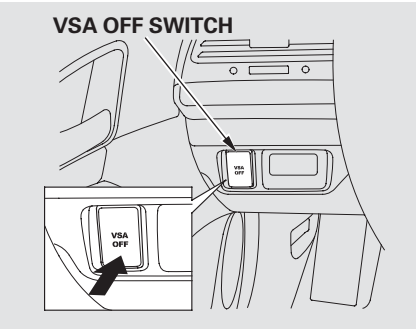

This switch is under the driver's side vent. To turn the VSA system on and off, press and hold it until you hear a beep.

When VSA is off, the VSA activation indicator comes on as a reminder. Press and hold the switch again. It turns the system back on.

VSA is turned on every time you start the engine, even if you turned it off the last time you drove the vehicle.

In certain unusual conditions when your vehicle gets stuck in shallow mud or fresh snow, it may be easier to free it with the VSA temporarily switched off. When the VSA system is off, the traction control system is also off. You should only attempt to free your vehicle with the VSA off if you are not able to free it when the VSA is on.

Immediately after freeing your vehicle, be sure to switch the VSA on again. We do not recommend driving your vehicle with the VSA and traction control systems switched off.

VSA and Tire Sizes

Driving with varying tire or wheel sizes may cause the VSA to malfunction. When replacing tires, make sure they are of the same size and type as your original tires (see page 335).

If you install winter tires, make sure they are the same size as those that were originally supplied with your vehicle. Exercise the same caution during winter driving as you would if your vehicle was not equipped with VSA.

Tire Pressure Monitoring System (TPMS)

Your vehicle is equipped with a tire pressure monitoring system (TPMS) that turns on every time you start the engine and monitors the pressure in your tires while driving.

Each tire has its own pressure sensor (not including the spare tire). If the air pressure of a tire becomes significantly low while driving, the sensor in that tire immediately sends a signal that causes the low tire pressure indicator to come on.

Low Tire Pressure Indicator

When the low tire pressure indicator is on, one or more of your tires is significantly underinflated. You should stop and check your tires as soon as possible, and inflate them to the proper pressure as indicated on the vehicle's tire information placard.

If you think you can safely drive a short distance to a service station, proceed slowly, and inflate the tire to the recommended pressure shown on the driver's doorjamb.

If the tire is flat, or if the tire pressure is too low to continue driving, replace the tire with the compact spare tire (see page 343).

If you cannot make the low tire pressure indicator go out after inflating the tires to the specified values, have your dealer check the system as soon as possible.

Driving on a significantly under inflated tire causes the tire to overheat and can lead to tire failure. Underinflation also reduces fuel efficiency and tire tread life, and may affect the vehicle's handling and stopping ability.

Because tire pressure varies by temperature and other conditions, the low tire pressure indicator may come on unexpectedly.

For example, if you check and fill your tires in a warm area, then drive in extremely cold weather, the tire pressure will be lower than measured and could be underinflated and cause the low tire pressure indicator to come on. Or, if you check and adjust your tire pressure in cooler conditions, and drive into extremely hot conditions, the tire may become overinflated. However, the low tire pressure indicator will not come on if the tires are overinflated.

Refer to page 329 for tire inflation guidelines.

Although your tire pressure is monitored, you must manually check the tire pressures monthly.

Each tire, including the spare, should be checked monthly when cold, and set to the recommended inflation pressure as specified on the tire information label and in the owner's manual (see page 330).

TPMS Tire Pressure Monitoring System (TPMS) Indicator

This indicator comes on and stays on if there is a problem with the tire pressure monitoring system.

If this happens, the system will shut off and no longer monitor tire pressures. Have the system checked by your dealer as soon as possible.

If the low tire pressure indicator or TPMS indicator comes on, the VSA system automatically turns on even if the VSA system is turned off by pressing the VSA OFF switch (see page 277). If this happens, you cannot turn the VSA system off by pressing the VSA OFF switch again.

When you restart the vehicle with the compact spare tire, the TPMS indicator may also come on and stay on after driving several miles (kilometers).

Tire Pressure Monitoring System (TPMS)

Changing a Tire with TPMS
If you have a flat tire, the low tire pressure indicator will come on. Replace the flat tire with the compact spare tire (see page 343).

Each wheel (except the compact spare tire wheel) is equipped with a tire pressure sensor mounted inside the tire behind the valve stem. You must use TPMS specific wheels. It is recommended that you always have your tires serviced by your dealer or qualified technician.

After you replace the flat tire with the compact spare tire, the low tire pressure indicator stays on. This is normal; the system is not monitoring the spare tire pressure. Manually check the spare tire pressure to be sure it is correct. After several miles (kilometers) driving with the compact spare tire, the TPMS indicator comes on and the low tire pressure indicator goes off.

The low tire pressure indicator or the TPMS indicator will go off, after several miles (kilometers) driving, when you replace the spare tire with the specified regular tire equipped with the tire pressure monitor sensor.

Never use a puncture-repairing agent in a flat tire. If used, you will have to replace the tire pressure sensor. Have the flat tire repaired by your dealer as soon as possible.

As required by the FCC:
This device complies with Part 15 of the FCC rules. Operation is subject to the following two conditions: (1) This device may not cause harmful interference, and (2) this device must accept any interference received, including interference that may cause undesired operation.

Changes or modifications not expressly approved by the party responsible for compliance could void the user's authority to operate the equipment.

This device complies with Industry Canada Standard RSS-210.
Operation is subject to the following two conditions: (1) this device may not cause interference, and (2) this device must accept any interference that may cause undesired operation of the device.

Your vehicle has been designed primarily to carry passengers and their cargo. You can also use it to tow a trailer if you carefully observe the load limits, use the proper equipment, and follow the guidelines in this section.

Break-In Period
Avoid towing a trailer during your vehicle's first 600 miles (1,000 km) (see page 242).

⚠WARNING

Exceeding any load limit or improperly loading your vehicle and trailer can cause a crash in which you can be seriously hurt or killed.

Check the loading of your vehicle and trailer carefully before starting to drive.

Load Limits

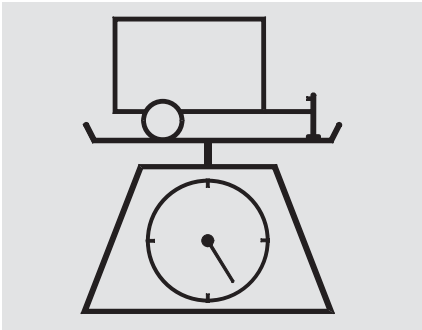

- **Total Trailer Weight:** The maximum allowable weight of the trailer and everything in or on it must not exceed 1,000 lbs (450 kg). Towing a load that is too heavy can seriously affect your vehicle's handling and performance. It can also damage the engine and drivetrain.

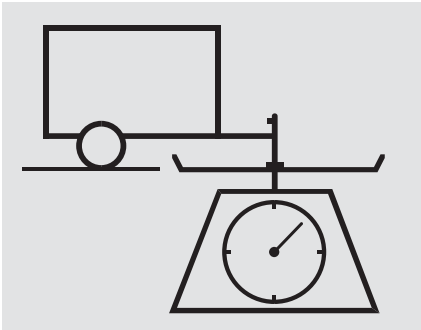

- **Tongue Load:** The weight that the tongue of a fully-loaded trailer puts on the hitch should be approximately 10% of the total trailer weight. Too much tongue load reduces front-tire traction and steering control. Too little tongue load can make the trailer unstable and cause it to sway.

CONTINUED

Towing a Trailer

To achieve a proper tongue load, start by loading 60% of the load toward the front of the trailer and 40% toward the rear, then re-adjust the load as needed.

- **Gross Vehicle Weight Rating (GVWR):**
  The maximum allowable weight of the vehicle, all occupants, all accessories, all cargo, and the tongue load is:

U.S. models

LX and LX-S:
4,299 lbs (1,950 kg)

EX and EX-L:
4,409 lbs (2,000 kg)

V6 models with automatic transmission:
4,541 lbs (2,060 kg)

V6 models with manual transmission:
4,475 lbs (2,030 kg)

Canadian models

LX:
1,970 kg

EX and EX-L:
2,020 kg

V6 models with automatic transmission:
2,075 kg

V6 models with manual transmission:
2,040 kg

- **Gross Axle Weight Rating (GAWR):**
  The maximum allowable weight at the vehicle axles is:

U.S. models

LX and LX-S:
2,337 lbs (1,060 kg)
on the front axle
2,006 lbs (910 kg)
on the rear axle

EX and EX-L:
2,414 lbs (1,095 kg)
on the front axle
2,039 lbs (925 kg)
on the rear axle

V6 models with automatic transmission:
2,535 lbs (1,150 kg)
on the front axle
2,050 lbs (930 kg)
on the rear axle

V6 models with manual transmission:
2,425 lbs (1,100 kg)
on the front axle
2,050 lbs (930 kg)
on the rear axle

Canadian models

LX:
1,065 kg
on the front axle
910 kg
on the rear axle

EX and EX-L:
1,095 kg
on the front axle
930 kg
on the rear axle

V6 models with automatic transmission:
1,160 kg
on the front axle
950 kg
on the rear axle

V6 models with manual transmission:
1,110 kg
on the front axle
950 kg
on the rear axle

Towing a Trailer

Checking Loads

The best way to confirm that all loads are within limits is to check them at a public scale. For public scales in your area, check your local phone book, or contact your trailer dealer or rental agency for assistance.

If you cannot get to a public scale, you can estimate the total trailer weight by adding the weight of your trailer (as quoted by the manufacturer) with everything in or on the trailer.

If you normally pull the same load each time you tow a trailer, you can use a suitable scale or a special tongue load gauge to check the tongue load the first time you set up a towing combination (a fully loaded vehicle and trailer), then recheck the tongue load whenever the conditions change.

Towing Equipment and Accessories

Towing can require a variety of equipment, depending on the size of your trailer, how it will be used, how much load you are towing, and where you tow.

Discuss your needs with your trailer sales or rental agency, and follow the guidelines in this section. Also make sure that all equipment is properly installed and maintained, and that it meets federal, state, province, territory, and local regulations.

Hitches

Any hitch used on your vehicle must be properly bolted to the underbody.

Safety Chains

Always use safety chains when you tow a trailer. Make sure the chains are secured to the trailer and hitch, and that they cross under the tongue and can catch the trailer if it becomes unhitched. Leave enough slack to allow the trailer to turn corners easily, but do not let the chains drag on the ground.

Trailer Brakes

There are two common types of trailer brakes: surge and electric. Surge brakes are common for boat trailers, since the brakes will get wet.

If you choose electric brakes, be sure they are electronically actuated. Do not attempt to tap into your vehicle's hydraulic system. No matter how successful it may seem, any attempt to attach trailer brakes to your vehicle's hydraulic system will lower braking effectiveness and create a potential hazard.

See your trailer dealer or rental agency for more information on installing electric brakes.

Trailer Lights

Trailer lights and equipment must comply with federal, state, province, territory, and local regulations. Check with your local trailer sales or rental agencies for the requirements in the area where you plan to tow, and use only equipment designed for your vehicle.

Since lighting and wiring vary by trailer type and brand, you should have a qualified technician install a suitable connector between the vehicle and the trailer. Improper equipment or installation can cause damage to your vehicle's electrical system and affect your vehicle warranty.

Additional Towing Equipment

Many states and Canadian provinces/territories require special outside mirrors when towing a trailer. Even if they don't, you should install special mirrors if you cannot clearly see behind you, or if the trailer creates a blind spot.
Ask your trailer sales or rental agency if any other items are recommended or required for your towing situation.

Towing a Trailer

Pre-Tow Checklist

When preparing to tow, and before driving away, be sure to check the following:

- The vehicle has been properly serviced, and the suspension and the cooling system are in good operating condition.
- The trailer has been properly serviced and is in good condition.
- All weights and loads are within limits.
- The hitch, safety chains, and any other attachments are secure.
- All items in or on the trailer are properly secured and cannot shift while you drive.
- The lights and brakes on your vehicle and the trailer are working properly.
- Your vehicle tires and spare are properly inflated, and the trailer tires and spare are inflated as recommended by the trailer maker.

Driving Safely With a Trailer

The added weight, length, and height of a trailer will affect your vehicle's handling and performance, so driving with a trailer requires some special driving skills and techniques.

For your safety and the safety of others, take time to practice driving maneuvers before heading for the open road, and follow the guidelines in this section.

Towing a Trailer

Towing Speeds and Gears
Drive slower than normal in all driving situations, and obey posted speed limits for vehicles with trailers. If you have an automatic transmission, use the D position when towing a trailer on level roads. D3 is the proper shift lever position to use when towing a trailer in hilly terrain. (See "***Driving on Hills***" in the next column for additional gear information.)

Making Turns and Braking
Make turns more slowly and wider than normal. The trailer tracks a smaller arc than your vehicle, and it can hit or run over something the vehicle misses. Allow more time and distance for braking. Do not brake or turn suddenly as this could cause the trailer to jackknife or turn over.

Driving on Hills
When climbing hills, closely watch your temperature gauge. If it nears the red (Hot) mark, turn the air conditioning off, reduce speed and, if necessary, pull to the side of the road to let the engine cool.

If the automatic transmission shifts frequently while going up a hill, shift to D3.

When driving down hills, reduce your speed, and shift down to second gear. Do not "ride" the brakes, and remember, it will take longer to slow down and stop when towing a trailer.

If you must stop when facing uphill, use the foot brake or parking brake. Do not try to hold the vehicle in place by pressing on the accelerator, as this can cause the automatic transmission to overheat.

Handling Crosswinds and Buffeting
Crosswinds and air turbulence caused by passing trucks can disrupt your steering and cause the trailer to sway. When being passed by a large vehicle, keep a constant speed, and steer straight ahead. Do not try to make quick steering or braking corrections.

CONTINUED

Towing a Trailer

Backing Up
Always drive slowly and have someone guide you when backing up. Grip the *bottom* of the steering wheel, then turn the wheel to the left to get the trailer to move to the left, and turn the wheel right to move the trailer to the right.

Parking
Follow all normal precautions when parking, including firmly setting the parking brake and putting the transmission in Park (automatic) or in first or reverse (manual). Also, place wheel chocks at each of the trailer's tires.

Towing Your Vehicle
Your vehicle is not designed to be towed behind a motor home. If your vehicle needs to be towed in an emergency, see page 365 .

Maintenance

This section explains why it is important to keep your vehicle well maintained and how to follow basic maintenance safety precautions.

This section also includes instructions on how to read the maintenance minder messages on the information display, and instructions for simple maintenance tasks you may want to take care of yourself.

If you have the skills and tools to perform more complex maintenance tasks on your vehicle, you may want to purchase the service manual. See page 389 for information on how to obtain a copy, or see your dealer.

Maintenance Safety 290
Maintenance Minder 291
Fluid Locations 298
Adding Engine Oil 300
Changing the Engine Oil and Filter 302
Engine Coolant 304
Windshield Washers 306
Transmission Fluid 307
  Automatic Transmission 307
  Manual Transmission 309
Brake and Clutch Fluid 312
Power Steering Fluid 313
Timing Belt 314
Lights 315
Cleaning the Seat Belts 324
Floor Mats 325
Dust and Pollen Filter 325
Wiper Blades 326
Tires 329
Checking the Battery 337
Vehicle Storage 338

Maintenance Safety

All service items not detailed in this section should be performed by a certified technician or qualified mechanic.

Important Safety Precautions
To eliminate potential hazards, read the instructions before you begin, and make sure you have the tools and skills required.

- Make sure your vehicle is parked on level ground, the parking brake is set, and the engine is off.
- To clean parts, use a commercially available degreaser or parts cleaner, not gasoline.
- To reduce the possibility of fire or explosion, keep cigarettes, sparks, and flames away from the battery and all fuel-related parts.
- Wear eye protection and protective clothing when working with the battery or compressed air.

⚠ WARNING

Improperly maintaining this vehicle, or failing to correct a problem before driving can cause a crash in which you can be seriously hurt or killed.

Always follow the inspection and maintenance recommendations and schedules in this owner's manual.

Potential Vehicle Hazards

- **Carbon Monoxide poison from engine exhaust.** Be sure there is adequate ventilation whenever you operate the engine.
- **Burns from hot parts.** Let the engine and exhaust system cool down before touching any parts.
- **Injury from moving parts.** Do not run the engine unless instructed to do so.

⚠ WARNING

Failure to properly follow maintenance instructions and precautions can cause you to be seriously hurt or killed.

Always follow the procedures and precautions in this owner's manual.

Some of the most important safety precautions are given here. However, we cannot warn you of every conceivable hazard that can arise in performing maintenance. Only you can decide whether or not you should perform a given task.

Your vehicle displays engine oil life and maintenance service items on the information display to show you when you should have your dealer do engine oil replacement and indicated maintenance service.

Based on the engine operating conditions, the onboard computer in your vehicle calculates the remaining engine oil life and displays it as a percentage.

Engine Oil Life Display

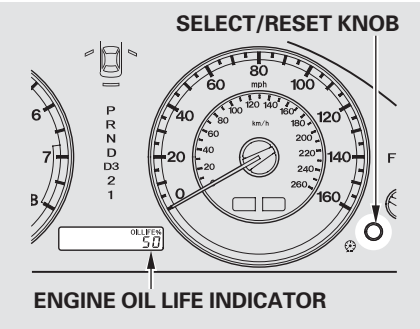

To see the current engine oil life, turn the ignition switch to the ON (II) position, then press and release the select/reset knob repeatedly until the engine oil life indicator appears (see page 64).

The remaining engine oil life is shown on the display according to this table:

Calculated Engine Oil Life (%)	Displayed Engine Oil Life (%)
100 % – 91 %	100 %
90 % – 81 %	90 %
80 % – 71 %	80 %
70 % – 61 %	70 %
60 % – 51 %	60 %
50 % – 41 %	50 %
40 % – 31 %	40 %
30 % – 21 %	30 %
20 % – 16 %	20 %
15 % – 11 %	15 %
10 % – 6 %	10 %
5 % – 1 %	5 %
0 %	0 %

CONTINUED

Maintenance Minder

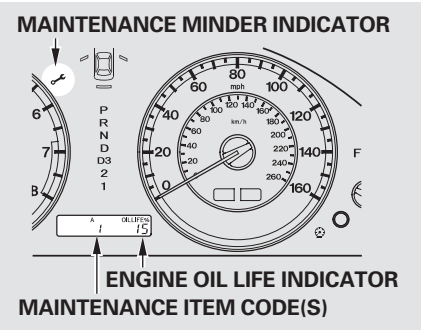

If the remaining engine oil life is 15 to 6 percent, you will see the engine oil life indicator every time you turn the ignition switch to the ON (II) position. The maintenance minder indicator will also come on, and the maintenance item code(s) for other scheduled maintenance items needing service will be displayed next to the engine oil life indicator.

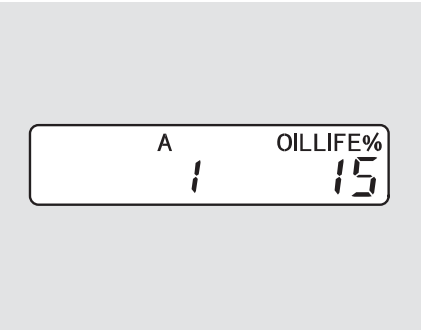

The 15 and 10 percent oil life indicators remind you that your vehicle will soon be due for scheduled maintenance.

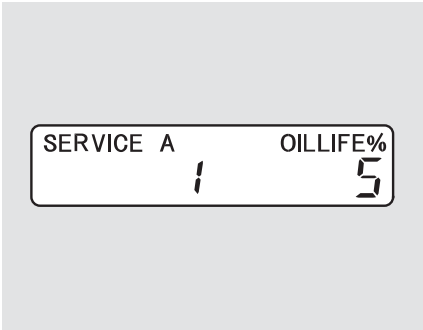

When the remaining engine oil life is 5 to 1 percent, you will see a “SERVICE” message along with the same maintenance item code(s), every time you turn the ignition switch to the ON (II) position.

The maintenance item code or codes indicate the main and sub items required at the time of the oil change (see page 297).

You can switch the information display from the engine oil life display to the odometer or the trip meter. Press and release the select/reset knob on the instrument panel.

When the engine oil life is 15 to 1 percent, the maintenance minder indicator ( ) comes on every time you turn the ignition switch to the ON (II) position, then it goes out if you switch the information display.

When you see this message, have the indicated maintenance performed by your dealer as soon as possible.

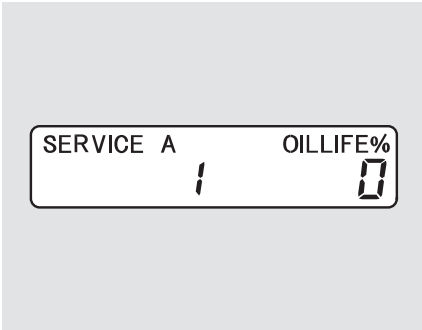

When the remaining engine oil life is 0 percent, the engine oil life indicator will blink. The display comes on every time you turn the ignition switch to the ON (II) position. The maintenance minder indicator ( ) also comes on and remains on in the instrument panel. When you see this message, immediately have the indicated maintenance done by your dealer.

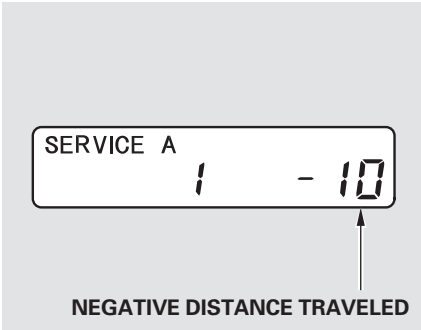

If you do not perform the indicated maintenance, negative distance traveled is displayed and begins to blink after the vehicle has been driven 10 miles (10 km) or more.

Negative distance traveled means your vehicle has passed the maintenance required point. Immediately have the indicated maintenance done by your dealer.

CONTINUED

Maintenance Minder

To change the information display from the engine oil life display to the odometer or the trip meter, press and release the select/reset knob.

When the engine oil life is 0 percent or negative distance traveled, the maintenance minder indicator ( ) remains on even if you change the information display.

Immediately have the service performed, and make sure to reset the display as described as follows.

Maintenance Main Items and Sub Items

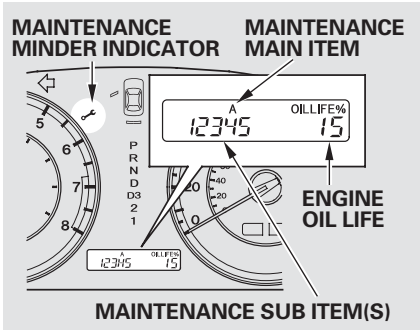

All maintenance items displayed on the information display are in code. For an explanation of these maintenance codes, see page 297 .

Resetting the Engine Oil Life Display

Your dealer will reset the display after completing the required maintenance service. You will see “OIL LIFE 100%” on the information display the next time you turn the ignition switch to the ON (II) position.

If maintenance service is done by someone other than your dealer, reset the maintenance minder as follows:

1. Turn the ignition switch to the ON (II) position.

2. Press the select/reset knob repeatedly until the engine oil life indicator is displayed.

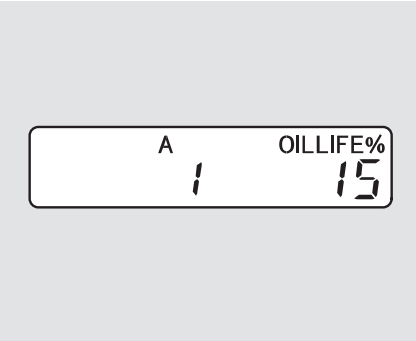

3. Press the select/reset knob for about 10 seconds. The engine oil life and the maintenance item code(s) will blink.

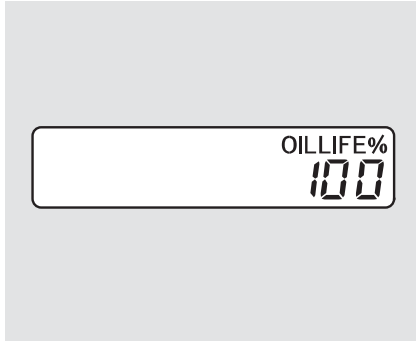

4. Press the select/reset knob for another 5 seconds. The maintenance item code(s) will disappear, and the engine oil life will reset to “100.”

Important Maintenance Precautions

If you have the required service done but do not reset the display, or reset the display without doing the service, the system will not show the correct maintenance intervals. This can lead to serious mechanical problems because you will no longer have an accurate record of when maintenance is needed.

Your authorized Honda dealer knows your vehicle best and can provide competent, efficient service.

CONTINUED

Maintenance Minder

However, service at a dealer is not mandatory to keep your warranties in effect. Maintenance may be done by any qualified service facility or person who is skilled in this type of automotive service. Make sure to have the service facility or person reset the display as previously described. Keep all receipts as proof of completion, and have the person who does the work fill out your Honda Service History or Canadian Maintenance Log. Check your warranty booklet for more information.

We recommend using Honda parts and fluids whenever you have maintenance done. These are manufactured to the same high quality standards as the original components, so you can be confident of their performance and durability.

U.S. Vehicles:
Maintenance, replacement, or repair of emissions control devices and systems may be done by any automotive repair establishment or individual using parts that are "certified" to EPA standards.

According to state and federal regulations, failure to perform maintenance on the items marked with # will not void your emissions warranties. However, all maintenance services should be performed in accordance with the intervals indicated by the information display.

Owner's Maintenance Checks
You should check the following items at the specified intervals. If you are unsure of how to perform any check, turn to the appropriate page listed.

- Engine oil level — Check every time you fill the fuel tank. See page 248.
- Engine coolant level — Check the radiator reserve tank every time you fill the fuel tank. See page 249.
- Automatic transmission — Check the fluid level monthly. See page 307.
- Brakes — Check the fluid level monthly. See page 312.
- Tires — Check the tire pressure monthly. Examine the tread for wear and foreign objects. See page 329.
- Lights — Check the operation of the headlights, parking lights, taillights, high-mount brake light, and license plate lights monthly. See page 315.

Symbol	Maintenance Main Items
A	• **Replace engine oil*1**

B	• **Replace engine oil*1 and oil filter**
	• **Inspect front and rear brakes**
	• **Check parking brake adjustment**
	• **Inspect these items:**
	  • **Tie rod ends, steering gear box, and boots**
	  • **Suspension components**
	  • **Driveshaft boots**
	  • **Brake hoses and lines (including ABS/VSA)**
	  • **All fluid levels and condition of fluids**
	  • **Exhaust system#**
	  • **Fuel lines and connections#**

*1: If the message "SERVICE" does not appear more than 12 months after the display is reset, change the engine oil every year.

#: See information on maintenance and emissions warranty in the center column on page 296.

NOTE:
- Independent of the maintenance minder display, replace the brake fluid every 3 years.
- Inspect idle speed every 160,000 miles (256,000 km).
- Adjust the valves during services A, B, 1, 2, or 3 if they are noisy.

Symbol	Maintenance Sub Items
1	• **Rotate tires**
2	• **Replace air cleaner element** If you drive in dusty conditions, replace every 15,000 miles (24,000 km). • **Replace dust and pollen filter** If you drive primarily in urban areas that have high concentrations of soot in the air from industry and from diesel-powered vehicles, replace every 15,000 miles (24,000 km). • **Inspect drive belt**
3	• **Replace transmission fluid**
4	• **Replace spark plugs** • **Replace timing belt and inspect water pump (V6 engine only)** If you drive regularly in very high temperatures (over 110°F, 43°C), or in very low temperatures (under −20°F, −29°C), replace every 60,000 miles (U.S.)/100,000 km (Canada). • **Inspect valve clearance**
5	• **Replace engine coolant**

Fluid Locations

4-cylinder models

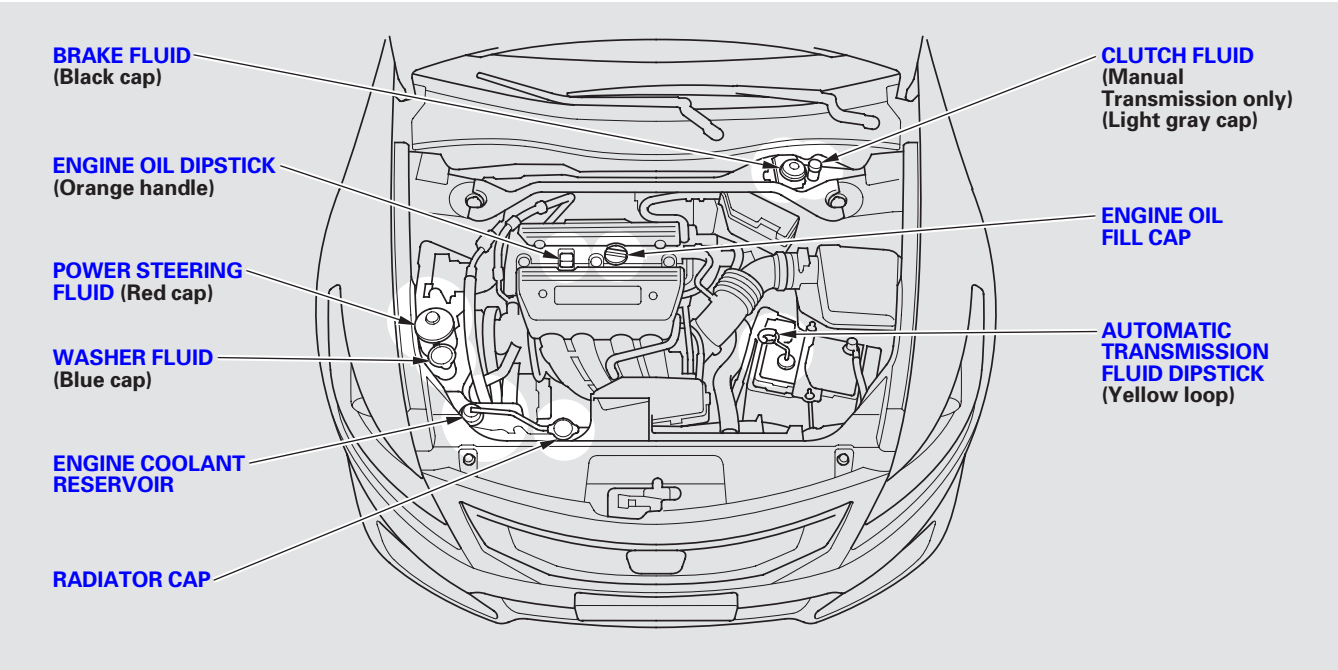

Fluid Locations

V6 models

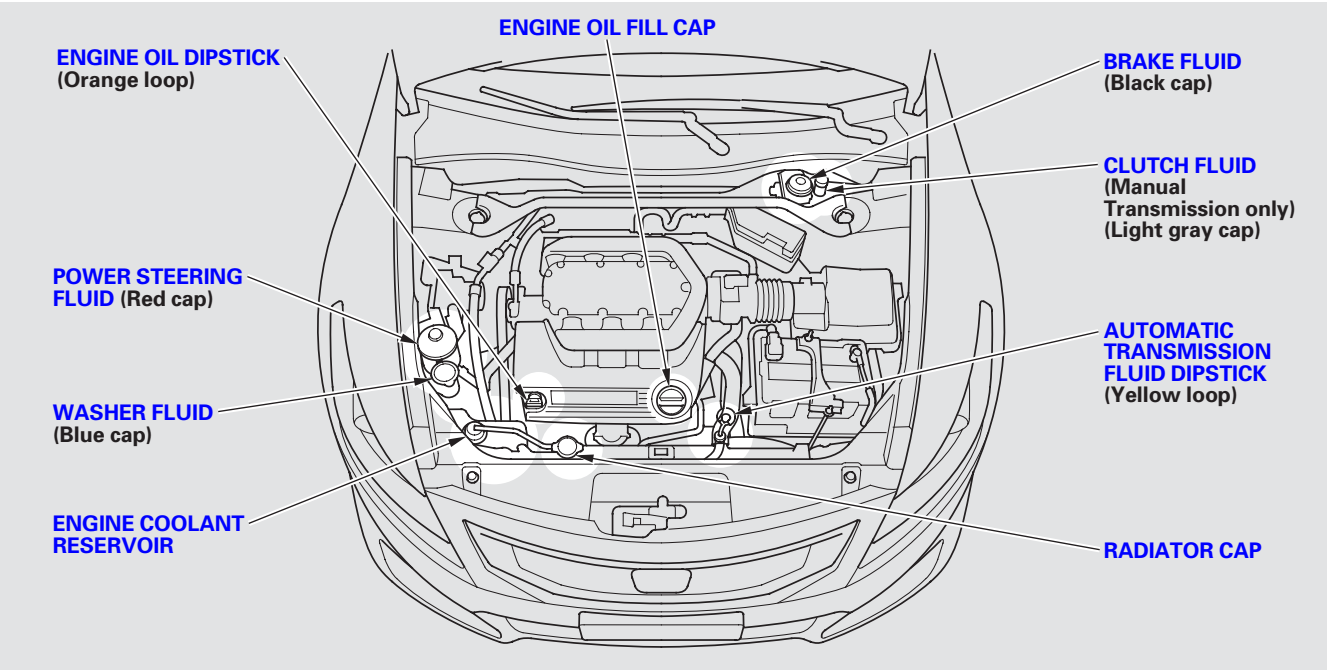

Adding Engine Oil

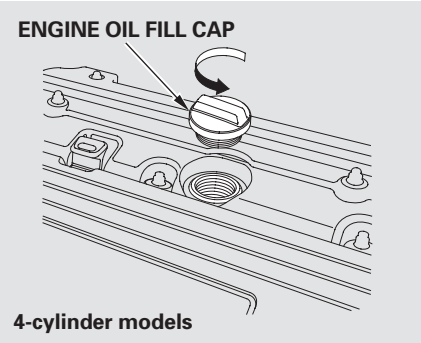

4-cylinder models

Unscrew and remove the engine oil fill cap on top of the valve cover. Pour in the oil slowly and carefully so you do not spill any. Clean up any spills immediately. Spilled oil could damage components in the engine compartment.

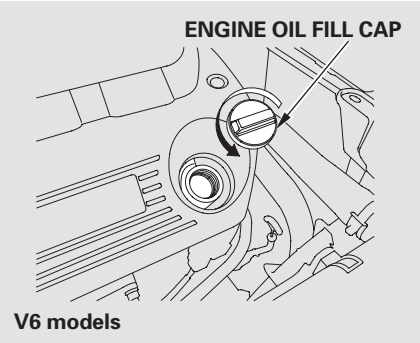

V6 models

Reinstall the engine oil fill cap, and tighten it securely. Wait a few minutes, and recheck the oil level on the engine oil dipstick. Do not fill above the upper mark; you could damage the engine.

Recommended Engine Oil

Oil is a major contributor to your engine's performance and longevity. Always use a premium-grade 5W-20 detergent oil displaying the API Certification Seal. This seal indicates the oil is energy conserving, and that it meets the American Petroleum Institute's latest requirements.

Adding Engine Oil

Honda Motor Oil is the preferred 5W-20 lubricant for your vehicle. It is highly recommended that you use Honda Motor Oil in your vehicle for optimum engine protection. Make sure the API Certification Seal says "For Gasoline Engines."

API CERTIFICATION SEAL

The oil viscosity or weight is provided on the container's label. 5W-20 oil is formulated for year-round protection of your vehicle to improve cold weather starting and fuel economy.

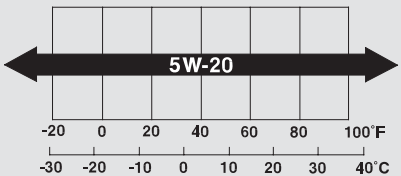

Ambient Temperature

Synthetic Oil

You may use a synthetic motor oil if it meets the same requirements given for a conventional motor oil: it displays the API Certification Seal, and it is the proper weight. You must follow the oil and filter change intervals shown on the information display.

Engine Oil Additives

Your vehicle does not require any oil additives. Additives may adversely affect the engine or transmission performance and durability.

Changing the Engine Oil and Filter

Always change the oil and filter according to the maintenance messages shown on the information display. The oil and filter collect contaminants that can damage your engine if they are not removed regularly.

Changing the oil and filter requires special tools and access from underneath the vehicle. The vehicle should be raised on a service station-type hydraulic lift for this service. Unless you have the knowledge and proper equipment, you should have this maintenance done by a skilled technician.

1. Run the engine until it reaches normal operating temperature, then shut it off.

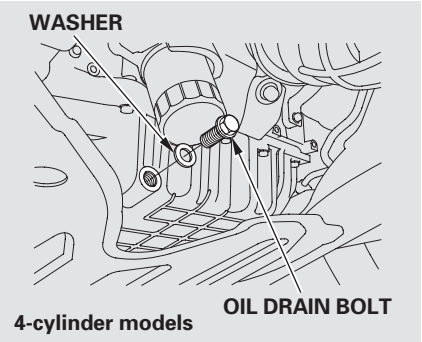

2. Open the hood, and remove the engine oil fill cap. Remove the oil drain bolt and washer from the bottom of the engine. Drain the oil into an appropriate container.

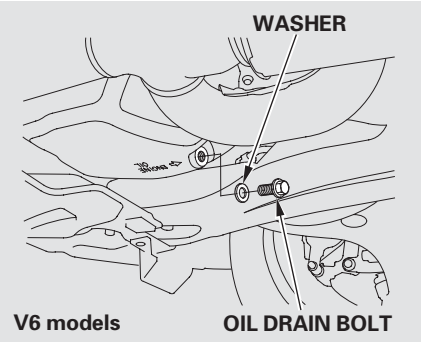

3. Remove the oil filter and let the remaining oil drain. A special wrench (available from your dealer) is required.

   Make sure the oil filter gasket is not stuck to the contacting surface of the engine. If it is, remove it before installing a new oil filter.

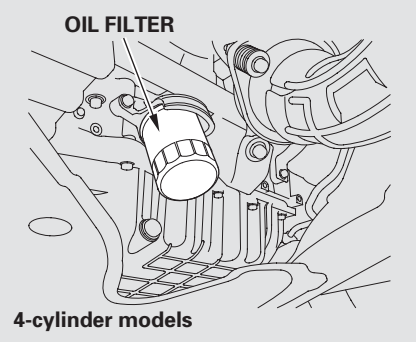

4-cylinder models

4. Install a new oil filter according to the instructions that come with it. Make sure to clean off any dirt and dust on the contacting surface of a new oil filter.

5. Put a new washer on the drain bolt, then reinstall the drain bolt. Tighten the drain bolt to:
   29 lbf·ft (39 N·m , 4.0 kgf·m)

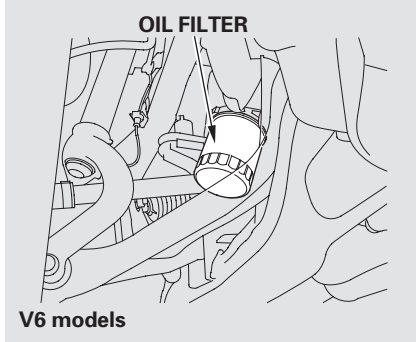

V6 models

6. Refill the engine with the recommended oil.

   Engine oil change capacity (including filter):

   4-cylinder models
   4.2 US qt (4.0 ℓ)

   V6 models
   4.5 US qt (4.3 ℓ)

7. Reinstall the engine oil fill cap. Start the engine. The oil pressure indicator should go out within 5 seconds. If it does not, turn off the engine, and check your work.

8. Let the engine run for several minutes, then check the drain bolt and oil filter for leaks.

9. Turn off the engine, let it sit for several minutes, then check the oil level on the dipstick. If necessary, add more oil.

NOTICE

Improper disposal of engine oil can be harmful to the environment. If you change your own oil, please dispose of the used oil properly. Put it in a sealed container and take it to a recycling center. Do not discard it in a trash bin or dump it on the ground.

Engine Coolant

Adding Engine Coolant

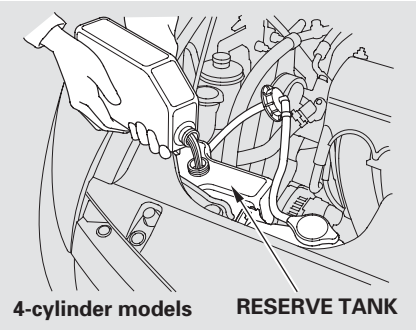

If the coolant level in the reserve tank is at or below the MIN line, add coolant to bring it up to the MAX line. Inspect the cooling system for leaks.

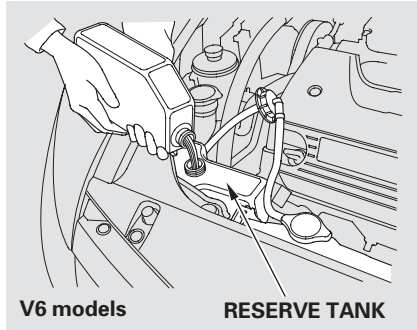

Always use Honda Long-life Anti-freeze/Coolant Type 2. This coolant is pre-mixed with 50 percent antifreeze and 50 percent distilled water. Never add straight antifreeze or plain water.

If Honda antifreeze/coolant is not available, you may use another major-brand non-silicate coolant as a temporary replacement. Make sure it is a high-quality coolant recommended for aluminum engines. Continued use of any non-Honda coolant can result in corrosion, causing the cooling system to malfunction or fail. Have the cooling system flushed and refilled with Honda antifreeze/coolant as soon as possible.

4-cylinder models only

NOTICE

If you regularly drive your vehicle under severe conditions in very low temperature (under −31°F, −35°C), a higher concentration of coolant should be used. Consult your Honda dealer for more information on the proper coolant.

If the reserve tank is completely empty, you should also check the coolant level in the radiator.

⚠ WARNING

Removing the radiator cap while the engine is hot can cause the coolant to spray out, seriously scalding you.

Always let the engine and radiator cool down before removing the radiator cap.

1. Make sure the engine and radiator are cool.

2. Relieve any pressure in the cooling system by turning the radiator cap counterclockwise, without pressing down.

3. Remove the radiator cap by pushing it down and turning it counterclockwise.

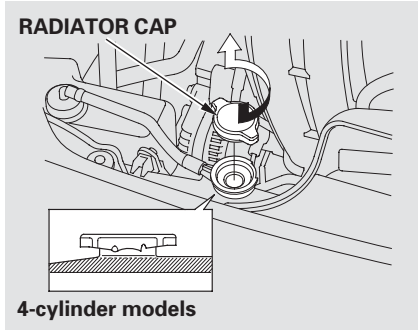

4. The coolant level should be up to the base of the filler neck. Add coolant if it is low.

   Pour the coolant slowly and carefully so you do not spill any. Clean up any spill immediately; it could damage components in the engine compartment.

5. Put the radiator cap back on, and tighten it fully.

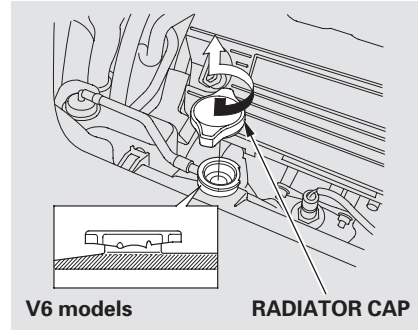

6. Pour coolant into the reserve tank. Fill it to halfway between the MAX and MIN marks. Put the cap back on the reserve tank.

Do not add any rust inhibitors or other additives to your vehicle's cooling system. They may not be compatible with the coolant or engine components.

Windshield Washers

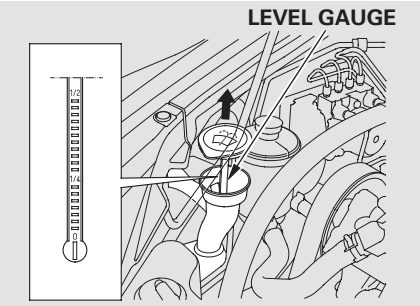

4-cylinder models

Check the level in the windshield washer reservoir at least monthly during normal use.

Check the fluid level by removing the cap and looking at the level gauge.

On Canadian models: The low washer level indicator comes on when the level is low (see page 60).

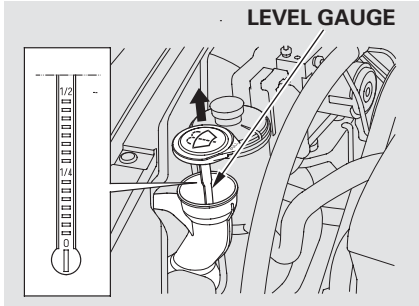

V6 models

Fill the reservoir with a good-quality windshield washer fluid. This increases the cleaning capability and prevents freezing in cold weather.

When you refill the reservoir, clean the edges of the windshield wiper blades with windshield washer fluid on a clean cloth. This will help to condition the blade edges.

NOTICE

Do not use engine antifreeze or a vinegar/water solution in the windshield washer reservoir. Antifreeze can damage your vehicle's paint, while a vinegar/water solution can damage the windshield washer pump. Use only commercially-available windshield washer fluid.

Transmission Fluid

Automatic Transmission

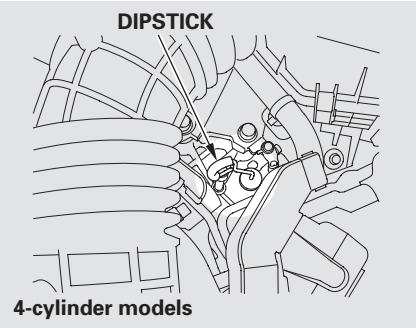

4-cylinder models

Check the fluid level with the engine at normal operating temperature.

1. Park the vehicle on level ground. Start the engine, let it run until the radiator fan comes on, then shut off the engine. For accurate results, wait about 60 seconds (but no longer than 90 seconds) before doing step 2.

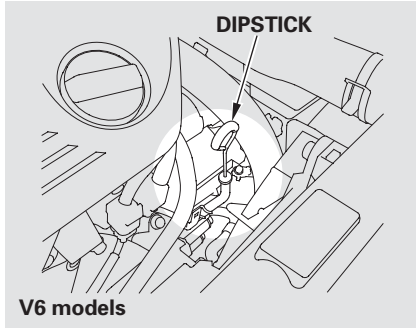

V6 models

2. Remove the dipstick (yellow loop) from the transmission, and wipe it with a clean cloth.

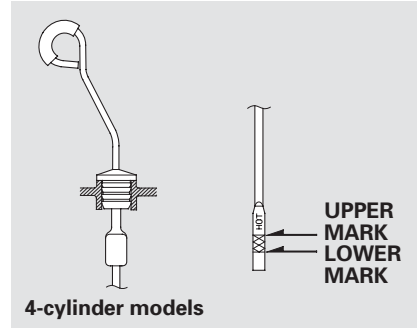

4-cylinder models

3. Insert the dipstick all the way into the transmission securely as shown in the illustration.

CONTINUED

Transmission Fluid

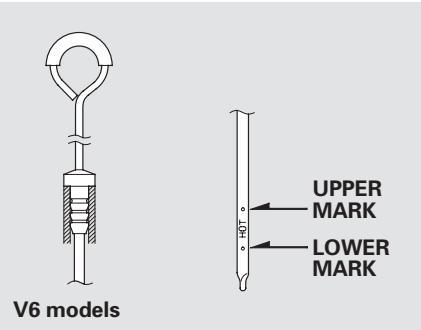

V6 models

4. Remove the dipstick and check the fluid level. It should be between the upper and lower marks.

5. If the level is below the lower mark, add fluid into the dipstick hole to bring it to the level between the upper and lower marks.

   Pour the fluid slowly and carefully so you do not spill any. Clean up any spill immediately; it could damage components in the engine compartment.

   Always use Honda Genuine ATF-Z1 (automatic transmission fluid).

6. Insert the dipstick all the way back into the transmission securely as shown in the illustration.

The transmission should be drained and refilled with new fluid according to the maintenance minder (see page 291).

If you are not sure how to add fluid, contact your dealer.

NOTICE

Use only Honda Genuine ATF-Z1 (automatic transmission fluid). Do not mix with other transmission fluids. Using transmission fluid other than Honda Genuine ATF-Z1 may cause deterioration in transmission operation and durability, and could result in damage to the transmission. Damage resulting from the use of transmission fluid other than Honda Genuine ATF-Z1 is not covered by the Honda new vehicle warranty.

Transmission Fluid

Manual Transmission

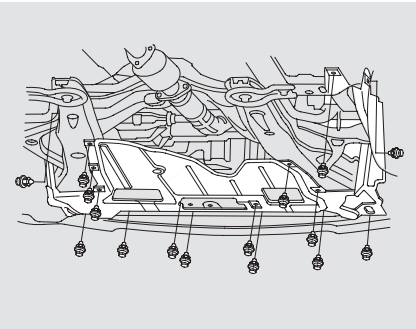

4-cylinder models
Check the fluid level with the transmission at normal operating temperature and the vehicle sitting on level ground.

To check the transmission fluid level, remove the under cover holding clips with a flat-tip screwdriver, then remove the under cover carefully.

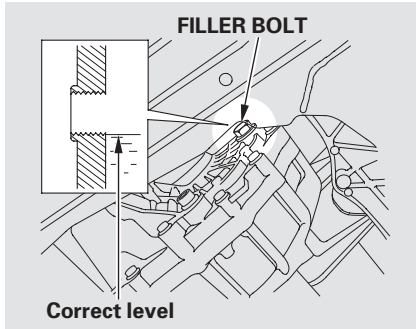

Remove the transmission filler bolt, and carefully feel inside the bolt hole with your finger.

The fluid level should be up to the edge of the bolt hole. If it is not, add Honda Manual Transmission Fluid (MTF) until it starts to run out of the hole. Reinstall the filler bolt, and tighten it securely.

Reinstall the under cover and put the holding clips back in place. Make sure the under cover is installed under the edge of the front bumper.

If Honda MTF is not available, you may use an SAE 10W-30 or 10W-40 viscosity motor oil with the API Certification Seal that says “FOR GASOLINE ENGINES” as a temporary replacement. However, motor oil does not contain the proper additives, and continued use can cause stiffer shifting. Replace as soon as it is convenient.

The transmission should be drained and refilled with new fluid according to the maintenance minder (see page 291).

If you are not sure how to check and add fluid, contact your dealer.

CONTINUED

Transmission Fluid

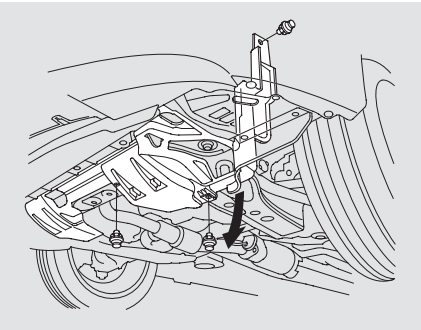

V6 models
Check the fluid level with the transmission at normal operating temperature and the vehicle sitting on level ground.

To check the transmission fluid level, remove the 3 under cover holding clips with a flat-tip screwdriver, then pull out the driver's side under cover carefully.

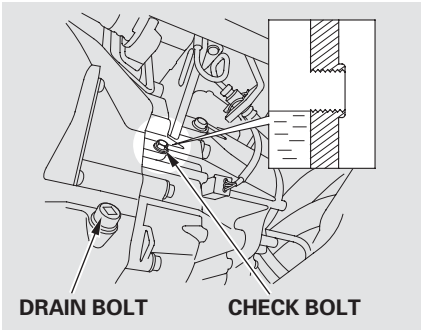

Remove the check bolt and look for transmission fluid coming out of the bolt hole. If a small amount of fluid drips out of the bolt hole, reinstall the check bolt.

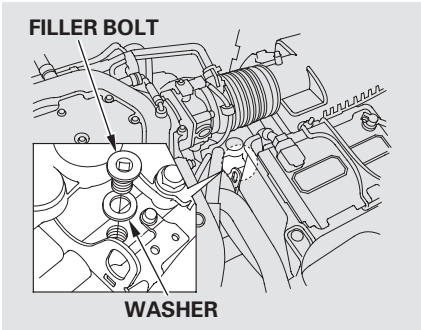

If no fluid comes out, remove the filler bolt. Slowly add Honda Manual Transmission Fluid (MTF) until it starts to run out of the check bolt hole.

Transmission Fluid

Pour the fluid into the filler hole slowly and carefully so you do not spill any. Clean up any spills immediately; it could damage components in the engine compartment.

Let the fluid run out until it stops, then reinstall the check bolt and the filler bolt.

Reinstall the under cover and put the holding clips back in place. Make sure the under cover is installed under the edge of the front bumper.

If Honda MTF is not available, you may use an SAE 10W-30 or 10W-40 viscosity motor oil with the API Certification Seal that says “FOR GASOLINE ENGINES” as a temporary replacement. However, motor oil does not contain the proper additives, and continued use can cause stiffer shifting. Replace as soon as it is convenient.

The transmission should be drained and refilled with new fluid according to the maintenance minder (see page 291).

If you are not sure how to check and add fluid, contact your dealer.

Brake and Clutch Fluid

Check the fluid level in the reservoirs monthly. There are up to two reservoirs, depending on the model. They are:

- Brake fluid reservoir (all models)
- Clutch fluid reservoir (manual transmission only)

Independent of the maintenance minder display, replace the brake fluid every 3 years.

Always use Honda Heavy Duty Brake Fluid DOT 3. If it is not available, you should use only DOT 3 or DOT 4 fluid, from a sealed container, as a temporary replacement.

Using any non-Honda brake fluid can cause corrosion and decrease the life of the system. Have the brake system flushed and refilled with Honda Heavy Duty Brake Fluid DOT 3 as soon as possible.

Brake fluid marked DOT 5 is not compatible with your vehicle's braking system and can cause extensive damage.

Brake Fluid

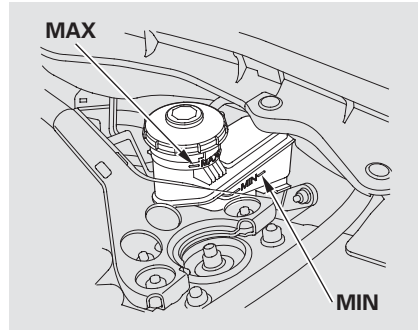

The fluid level should be between the MIN and MAX marks on the side of the reservoir. If the level is at or below the MIN mark, your brake system needs attention. Have the brake system inspected for leaks or worn brake pads.

Brake and Clutch Fluid, Power Steering Fluid

Clutch Fluid

Manual transmission only

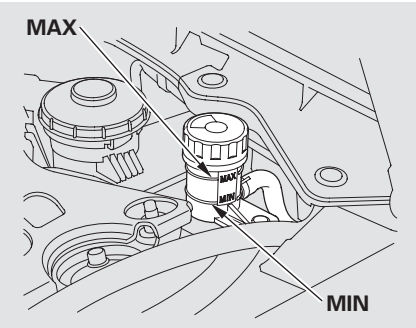

The fluid level should be between the MIN and MAX marks on the side of the reservoir. If it is not, add brake fluid to bring it up to that level. Use the same fluid specified for the brake system.

A low fluid level can indicate a leak in the clutch system. Have this system inspected as soon as possible.

Power Steering Fluid

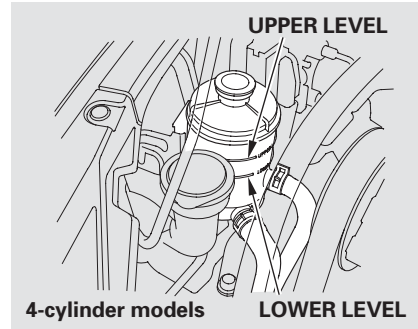

Check the level on the side of the reservoir when the engine is cold. The fluid should be between the UPPER LEVEL and LOWER LEVEL. If not, add power steering fluid to the UPPER LEVEL.

CONTINUED

Power Steering Fluid, Timing Belt

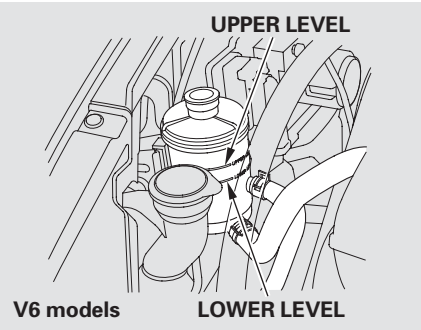

Pour the fluid slowly and carefully so you do not spill any. Clean up any spills immediately; it could damage components in the engine compartment.

Always use Honda Power Steering Fluid. You may use another power steering fluid as an emergency replacement, but have the power steering system flushed and refilled with Honda PSF as soon as possible.

A low power steering fluid level can indicate a leak in the system. Check the fluid level frequently, and have the system inspected as soon as possible.

NOTICE

Turning the steering wheel to full left or right lock and holding it there can damage the power steering pump.

Timing Belt

V6 models

The timing belt should be replaced according to the maintenance minder (see page 291).

Replace the timing belt every 60,000 miles (U.S.) or every 100,000 km (Canada) if you regularly drive your vehicle in any of the following conditions:

- In very high temperatures (over 110°F, 43°C).
- In very low temperatures (under −20°F, −29°C).
- If you frequently tow a trailer.

Headlight Aiming

The headlights were properly aimed when your vehicle was new. If you regularly carry heavy items in the trunk or pull a trailer, readjustment may be required. Adjustments should be done by your dealer or another qualified technician.

Replacing a Headlight Bulb

Your vehicle has halogen headlight bulbs. When replacing a bulb, handle it by its base, and protect the glass from contact with your skin or hard objects. If you touch the glass, clean it with denatured alcohol and a clean cloth.

NOTICE

Halogen headlight bulbs get very hot when lit. Oil, perspiration, or a scratch on the glass can cause the bulb to overheat and shatter.

High Beam Headlight

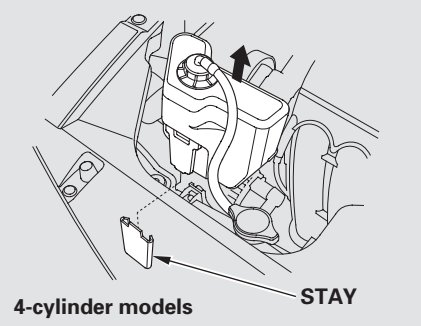

1. Open the hood.

   To change a bulb on the passenger's side, remove the engine coolant reserve tank by pulling it out of its stay.

CONTINUED

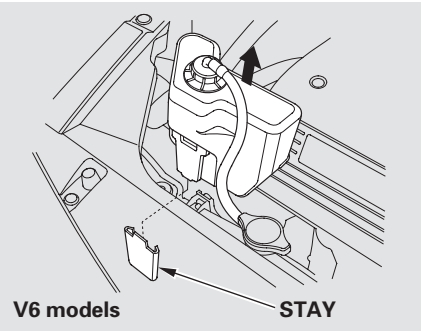

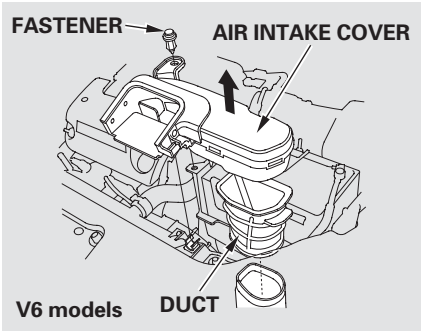

On V6 models
To change a bulb on the driver's side, undo the fastener and remove the air intake cover and duct.

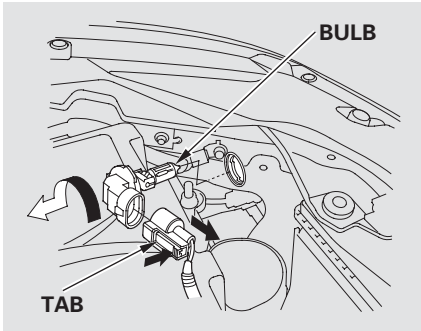

2. Remove the electrical connector from the bulb by pushing on the tab to unlock it, then slide the connector off the bulb.

3. Remove the bulb by turning it approximately one-quarter turn counterclockwise.

4. Install the new bulb, and turn it one-quarter turn clockwise to lock it in place.

5. Push the electrical connector onto the bulb.

6. Turn on the headlights to test the new bulb.

7. *Driver's side on V6 models*
   Reinstall the air intake cover and duct securely. Reinstall the fastener and secure it by pushing on the head until it locks.

   Passenger's side
   Reinstall the engine coolant reserve tank.

Low Beam Headlight

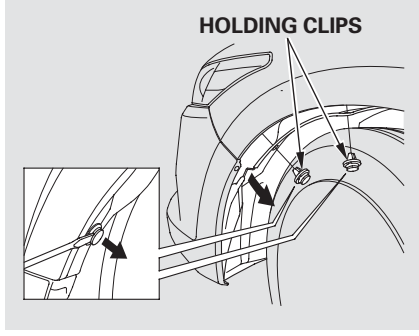

1. To change the passenger's side bulb, start the engine, turn the steering wheel all the way to the left, and turn off the engine. To change the driver's side bulb, turn the steering wheel to the right.

2. Use a flat-tip screwdriver to remove the two holding clips from the inner fender.

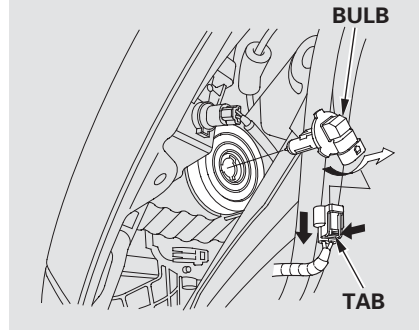

3. Pull the inner fender cover away from the fender and bumper.

4. Remove the bulb by turning it approximately one-quarter turn counterclockwise.

5. Remove the electrical connector from the bulb by pushing on the tab to unlock it, then slide the connector off the bulb.

CONTINUED

6. Install the new bulb, and turn it one-quarter turn clockwise to lock it in place.

7. Push the electrical connector onto the bulb.

8. Turn on the headlights to test the new bulb.

9. Put the inner fender cover in place. Install the two holding clips. Lock each one in place by pushing on the center.

Replacing a Front Turn Signal/ Parking Light Bulb

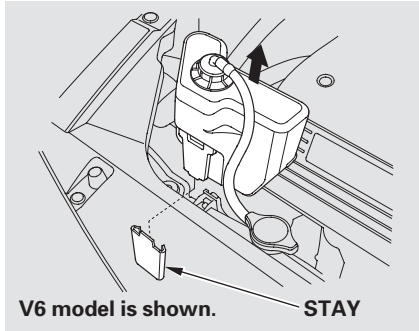

V6 model is shown.

1. Open the hood.

   To change the turn signal bulb on the passenger's side, remove the engine coolant reserve tank by pulling it out of its stay.

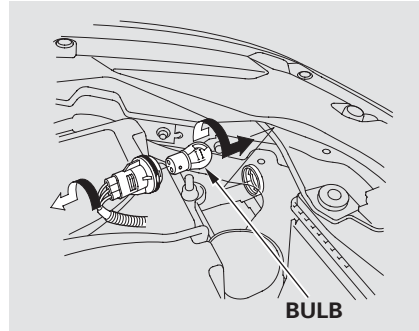

2. Remove the socket from the headlight assembly by turning it one-quarter turn counterclockwise.

3. To remove the burned out bulb, push it in and turn it counterclockwise until it unlocks.

4. Install the new bulb and turn it clockwise to lock it in place.

5. Insert the socket back into the headlight assembly. Turn it clockwise to lock it in place.

6. Turn on the lights to make sure the new bulb is working.

7. *Passenger's side*
   Reinstall the coolant reserve tank.

Replacing a Front Side Marker Light Bulb

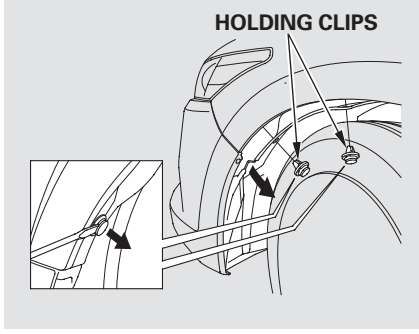

1. To change the bulb on the driver's side, start the engine, turn the steering wheel all the way to the right, then turn off the engine. To change the bulb on the passenger's side, turn the steering wheel to the left.

2. Use a flat-tip screwdriver to remove the two holding clips from the inner fender.

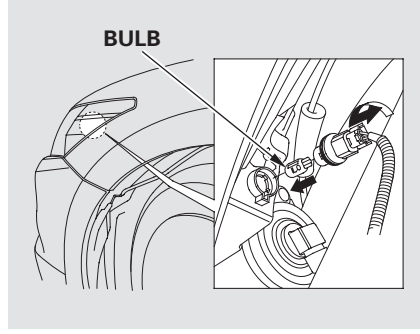

3. Remove the socket from the headlight assembly by turning it one-quarter turn counterclockwise.

4. Pull the burned out bulb straight out of its socket.
   Push the new bulb straight into the socket until it bottoms.

CONTINUED

5. Insert the socket back into the headlight assembly. Turn it clockwise to lock it in place.

6. Turn on the lights to make sure the new bulb is working.

7. Reinstall the inner fender cover. Then reinstall the holding clips, and lock them in place by pushing on their centers.

Replacing Rear Bulbs

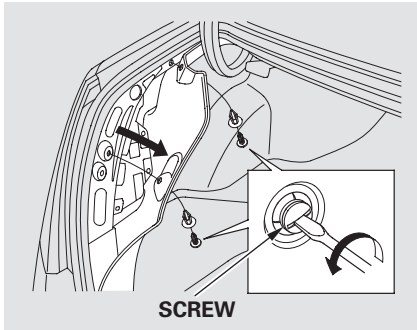

1. Open the trunk.

   Remove the screws in the center of each of the two fasteners on the side of the trunk lining. Pull the lining back.

2. Determine which of the three bulbs is burned out: stop/taillight, back-up light or turn signal light.

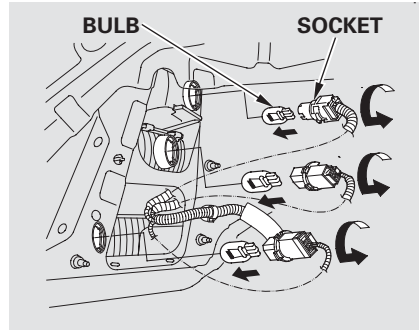

3. Remove the socket by turning it one-quarter turn counterclockwise.

4. Pull the bulb straight out of its socket. Push the new bulb straight into the socket until it bottoms.

5. Insert the socket back into the light assembly. Turn it clockwise to lock it in place.

6. Turn on the lights to make sure the new bulb is working.

7. Push the trunk lid trim back into position.

8. Put the fasteners into the holes on the side of the trunk lining. Reinstall the screws.

Replacing the High-mount Brake Light Bulb

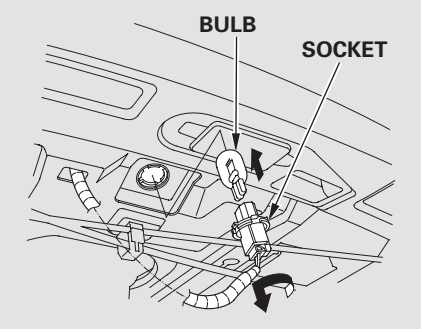

1. Open the trunk, and remove the socket from the light assembly by turning it one-quarter turn counter-clockwise.

2. Pull the bulb straight out of its socket. Push the new bulb straight into the socket until it bottoms.

3. Reinstall the socket. Turn it clockwise until it locks. Make sure the new bulb is working.

Lights

Replacing a Fog Light Bulb

If equipped

Your vehicle uses halogen light bulbs. When replacing a bulb, handle it by its plastic case, and protect the glass from contact with your skin or hard objects. If you touch the glass, clean it with denatured alcohol and a clean cloth.

NOTICE

Halogen light bulbs get very hot when lit. Oil, perspiration, or a scratch on the glass can cause the bulb to overheat and shatter.

The fog lights were properly aimed when your vehicle was new. If you regularly carry heavy items in the trunk or pull a trailer, readjustment may be required. Adjustment should be done by your dealer or another qualified technician.

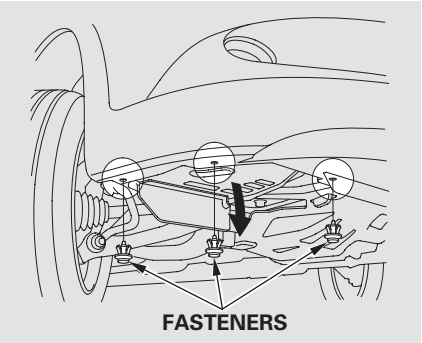

1. *Passenger's side*
   Remove the three fasteners with a flat-tip screwdriver.

   Pull down the under cover from the bumper carefully.

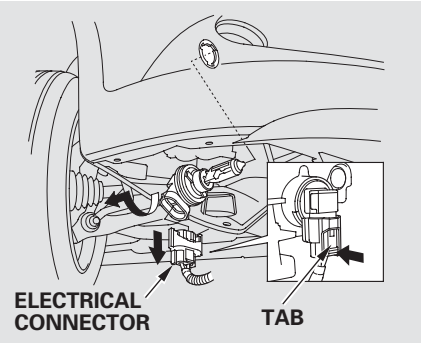

2. Remove the electrical connector from the bulb by pushing on the tab to unlock it, then slide the connector off the bulb.

3. Remove the bulb by turning it about one-quarter turn counterclockwise.

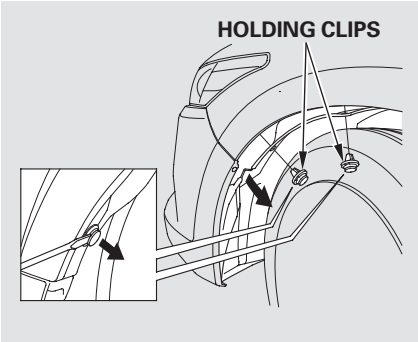

4. *Driver's side*
   To change the bulb, start the engine, turn the steering wheel all the way to the right, then turn off the engine.

5. Use a flat-tip screwdriver to remove the two holding clips from the inner fender, and pull the inner fender cover back.

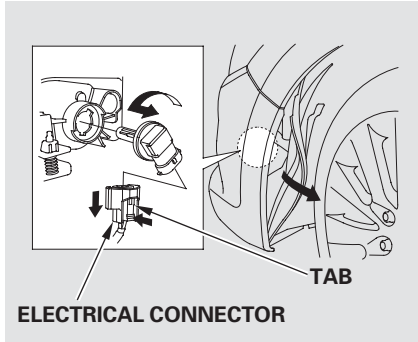

6. Remove the electrical connector from the bulb by pushing on the tab and pulling the connector down.

7. Remove the bulb from the fog light assembly by turning it one-quarter turn counterclockwise.

8. Insert the new bulb into the hole, and turn it one-quarter turn clockwise to lock it in place.

9. Push the electrical connector back onto the bulb. Make sure it is on all the way.

10. Turn on the fog lights to test the new bulb.

11. *Passenger's side*
    Reinstall the under cover and put the three fasteners back in place.

    Driver's side
    Reinstall the inner fender. Make sure it is installed under the edge of the front bumper.

    Reinstall the holding clips, and push in the head of each clip.

Lights, Cleaning the Seat Belts

Rear License Plate Light Bulbs

The license plate has two lights above it. The bulbs should be replaced by your dealer.

Cleaning the Seat Belts

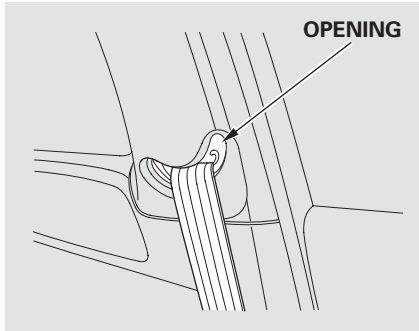

If your seat belts get dirty, use a soft brush with a mixture of mild soap and warm water to clean them. Do not use bleach, dye, or cleaning solvents. Let the belts air dry before you use the vehicle.

Dirt build-up around the openings of the seat belt anchors can cause the belts to retract slowly. Wipe the openings with a clean cloth dampened in mild soap and warm water or isopropyl alcohol.

Floor Mats, Dust and Pollen Filter

Floor Mats

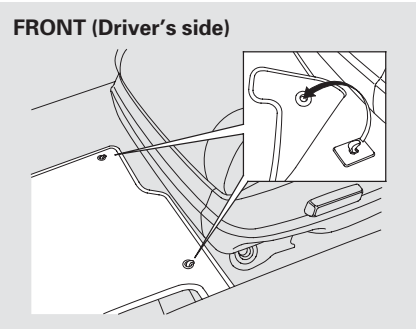

The driver's and right rear passenger's floor mats that came with your vehicle hook over the floor mat anchors. This keeps the floor mats from sliding forward and possibly interfering with the pedals (driver's floor mat) or with the seat weight sensors (right rear floor mat).

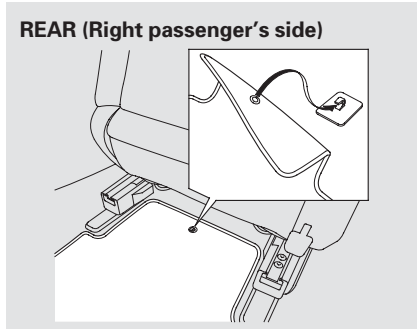

If you remove a floor mat, make sure to re-anchor it when you put it back in your vehicle.

If you use a non-Honda floor mat, make sure it fits properly and that it can be used with the floor mat anchors. Do not put additional floor mats on top of the anchored mat.

Dust and Pollen Filter

This filter removes the dust and pollen that is brought in from the outside through the heating and cooling system/climate control system.

Have your dealer replace this filter when this service is indicated by a maintenance message on the information display. It should be replaced every 15,000 miles (24,000 km) if you drive primarily in urban areas that have high concentrations of soot in the air, or if the airflow from the heating and cooling system/climate control system becomes less than usual.

Wiper Blades

Check the condition of the wiper blades at least every six months. Replace them if you find signs of cracking in the rubber, areas that are getting hard, or if they leave streaks and unwiped areas when used.

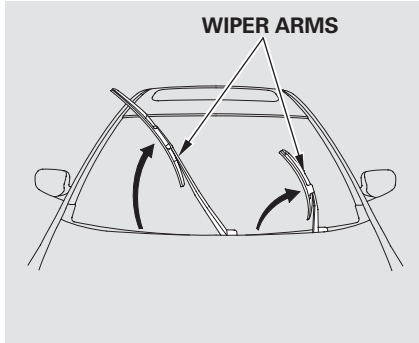

To replace a wiper blade:

1. Raise the wiper arm off the windshield. Raise the driver's side first, then the passenger's side.

NOTICE

Do not open the hood when the wiper arms are raised, or you will damage the hood and wiper arms.

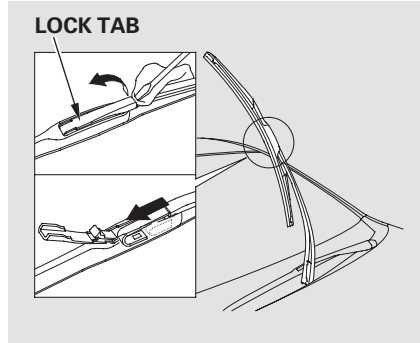

2. Disconnect the blade assembly from the wiper arm:

- Put a cloth on the edge of the lock tab to prevent scratches, then push up on the lock tab carefully with a flat-tip screwdriver.

Wiper Blades

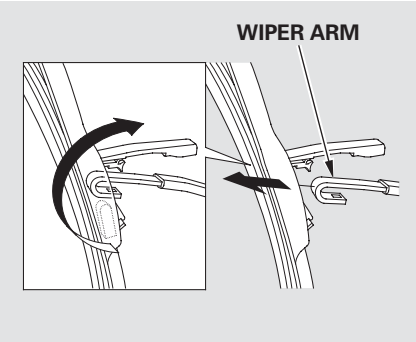

- Pivot the blade assembly toward the wiper arm until it releases from the wiper arm.

  When replacing a wiper blade, make sure not to drop the wiper blade or wiper arm down on the windshield.

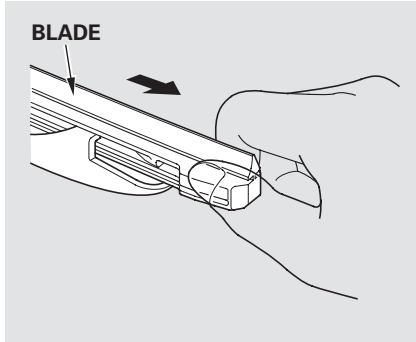

3. Remove the blade from its holder by grabbing the tabbed end of the blade. Pull firmly until the tabs come out of the holder.

4. Examine the new wiper blades. If they have no plastic or metal reinforcement along the back edge, remove the metal reinforcement strips from the old wiper blade, and install them in the slots along the edge of the new blade.

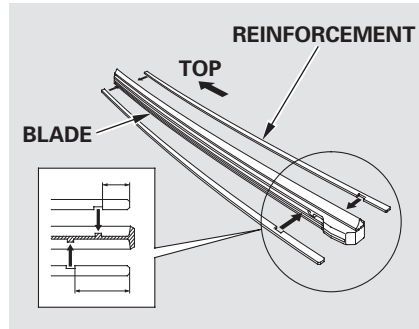

Make sure the two rubber tabs inside the blade fit to each notch of the reinforcement, as shown.

CONTINUED

Wiper Blades

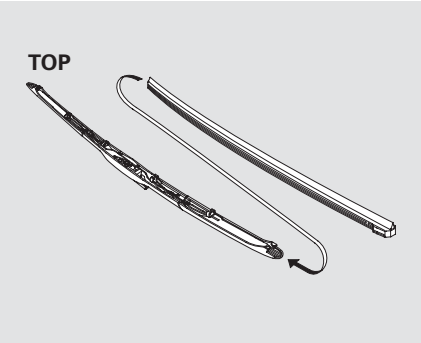

5. Place the top of the wiper blade on the end of the blade assembly, and slide the blade onto the assembly until the tabs are fitted onto the wiper blade.

   Make sure the blade is completely installed.

6. Slide the wiper blade assembly onto the wiper arm. Push down the lock tab. Make sure the wiper blade assembly locks in place.

7. Lower the wiper arm down against the windshield, the passenger's side first, then the driver's side.

To safely operate your vehicle, your tires must be the proper type and size, in good condition with adequate tread, and correctly inflated.

The following pages give more detailed information on how to take care of your tires and what to do when they need to be replaced.

⚠WARNING

Using tires that are excessively worn or improperly inflated can cause a crash in which you can be seriously hurt or killed.

Follow all instructions in this owner's manual regarding tire inflation and maintenance.

Inflation Guidelines

Keeping the tires properly inflated provides the best combination of handling, tread life, and riding comfort.

- Underinflated tires wear unevenly, adversely affect handling and fuel economy, and are more likely to fail from being overheated.
- Overinflated tires can make your vehicle ride harshly, are more prone to damage from road hazards, and wear unevenly.

The tire pressure monitoring system (TPMS) warns you when a tire pressure is low. See page 278 for more information.

Even though your vehicle is equipped with TPMS, we recommend that you visually check your tires every day. If you think a tire might be low, check it immediately with a tire gauge.

Use a gauge to measure the air pressure in each tire at least once a month. Even tires that are in good condition may lose 1 to 2 psi (10 to 20 kPa, 0.1 to 0.2 kgf/cm^2) per month. Remember to check the spare tire at the same time.

Check the air pressures when the tires are cold. This means the vehicle has been parked for at least 3 hours, or driven less than 1 mile (1.6 km). Add or release air, if needed, to match the recommended cold tire pressures on the next page.

CONTINUED

Tires

If you check air pressures when the tires are hot (driven for several miles/kilometers), you will see readings 4 to 6 psi (30 to 40 kPa, 0.3 to 0.4 kgf/cm²) higher than the cold readings. This is normal. Do not let air out to match the recommended cold air pressure. The tire will be underinflated.

You should get your own tire pressure gauge and use it whenever you check your tire pressures. This will make it easier for you to tell if a pressure loss is due to a tire problem and not due to a variation between gauges.

While tubeless tires have some ability to self-seal if they are punctured, you should look closely for punctures if a tire starts losing pressure.

Recommended Tire Pressures

Normal Driving

The following charts show the recommended cold tire pressures for most normal driving conditions.

4-cylinder models

Tire Size	Cold Tire Pressure for Normal Driving
P225/50R17 93V	Front/Rear: 32 psi (220 kPa , 2.2 kgf/cm²)

V6 models

Tire Size	Cold Tire Pressure for Normal Driving
P235/45R18 94V	Front/Rear: 32 psi (220 kPa , 2.2 kgf/cm²)

The compact spare tire pressure is: 60 psi (420 kPa , 4.2 kgf/cm²)

For convenience, the recommended tire sizes and cold tire pressures are on a label on the driver's doorjamb.

For additional information about your tires, see page 374 .

High Speed Driving

V6 models only

We strongly recommend that you do not drive faster than the posted speed limits and conditions allow. If you ever drive in a sanctioned competitive event at sustained high speeds (over 118 mph or 190 km/h), be sure to adjust the cold tire pressures as shown below. If you do not, excessive heat can build up and cause sudden tire failure.

V6 models only

Tire Size	Cold Tire Pressure
P235/45R18 94V	35 psi (240 kPa , 2.4 kgf/cm²)

4-cylinder models

Tire pressure for high speed driving is the same as for normal driving.

Tire Inspection

Every time you check inflation, you should also examine the tires for damage, foreign objects, and wear.

You should look for:

- Bumps or bulges in the tread or side of the tire. Replace the tire if you find either of these conditions.
- Cuts, splits, or cracks in the side of the tire. Replace the tire if you can see fabric or cord.
- Excessive tread wear.

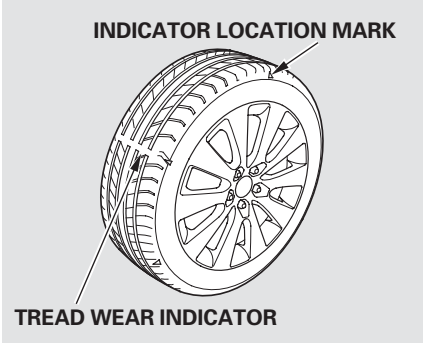

Your tires have wear indicators molded into the tread. When the tread wears down, you will see a 1/2 inch (12.7 mm) wide band across the tread. This shows there is less than 1/16 inch (1.6 mm) of tread left on the tire.

A tire this worn gives very little traction on wet roads. You should replace the tire if you can see three or more tread wear indicators.

Tires

Tire Service Life

The service life of your tires is dependent on many factors, including, but not limited to, driving habits, road conditions, vehicle loading, inflation pressure, maintenance history, speed, and environmental conditions (even when the tires are not in use).

In addition to your regular inspections and inflation pressure maintenance, it is recommended that you have annual inspections performed once the tires reach five years old. It is also recommended that all tires, including the spare, be removed from service after 10 years from the date of manufacture, regardless of their condition or state of wear.

The last four digits of the TIN (tire identification number) are found on the sidewall of the tire and indicate the date of manufacture (See **Tire Labeling** on page 376).

Tire Maintenance

In addition to proper inflation, correct wheel alignment helps to decrease tire wear. If you find a tire is worn unevenly, have your dealer check the wheel alignment.

Have your dealer check the tires if you feel a consistent vibration while driving. A tire should always be rebalanced if it is removed from the wheel. When you have new tires installed, make sure they are balanced. This increases riding comfort and tire life. For best results, have the installer perform a dynamic balance.

NOTICE

Improper wheel weights can damage your vehicle's aluminum wheels. Use only Honda wheel weights for balancing.

Tire Rotation

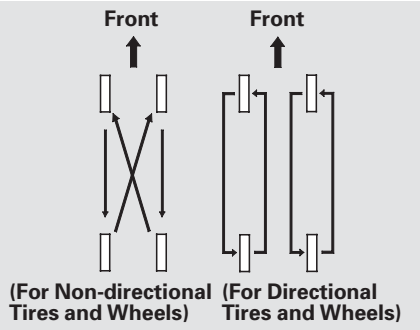

To help increase tire life and distribute wear more evenly, rotate the tires according to the maintenance messages displayed on the information display.
Move the tires to the positions shown in the illustration each time they are rotated. If you purchase directional tires, rotate only front-to-back.

When the tires are rotated, make sure the air pressures are checked.

Replacing Tires and Wheels
Replace your tires with radial tires of the same size, load range, speed rating, and maximum cold tire pressure rating (as shown on the tire's sidewall).

Mixing radial and bias-ply tires on your vehicle can reduce braking ability, traction, and steering accuracy. Using tires of a different size or construction can cause the ABS and vehicle stability assist system (VSA) to work inconsistently.

The ABS and VSA system work by comparing the speed of each wheel. When replacing tires, use the same size originally supplied with the vehicle. Tire size and construction can affect wheel speed and may cause the system to activate.

It is best to replace all four tires at the same time. If that is not possible or necessary, replace the two front tires or two rear tires as a pair. Replacing just one tire can seriously affect your vehicle's handling.

If you ever replace a wheel, make sure that the wheel's specifications match those of the original wheels.

Also be sure you use only TPMS specific wheels. If you do not, the tire pressure monitoring system will not work on that tire.

Replacement wheels are available at your dealer.

⚠ WARNING

Installing improper tires on your vehicle can affect handling and stability. This can cause a crash in which you can be seriously hurt or killed.

Always use the size and type of tires recommended in this owner's manual.

Wheel and Tire Specifications

Wheels
4-cylinder models:
17 x 7 1/2J

V6 models:
18 x 8 1/2J

Tires
4-cylinder models:
P225/50R17 93V

V6 models:
P235/45R18 94V

See page 374 for DOT tire quality grading information, and page 376 for tire size information.

Winter Driving

Tires marked "M + S" or "All Season" on the sidewall have an all-weather tread design suitable for most winter driving conditions.

For the best performance in snowy or icy conditions, you should install snow tires or tire chains. They may be required by local laws under certain conditions.

Snow Tires

If you mount snow tires on your vehicle, make sure they are radial tires of the same size and load range as the original tires. Mount snow tires on all four wheels. The traction provided by snow tires on dry roads may be lower than your original tires. Check with the tire dealer for maximum speed recommendations.

Tire Chains

Mount tire chains on your tires when required by driving conditions or local laws. Install them only on the front tires.

Because your vehicle has limited tire clearance, Honda strongly recommends using the chains listed below, made by Security Chain Company (SCC).

4-cylinder models:
Cable-type: SCC Radial Chain SC1036

V6 models:
Cable-type: SCC Radial Chain SC1040

CONTINUED

When installing chains, follow the manufacturer's instructions, and mount them as tight as you can. Make sure they are not contacting the brake lines or suspension. Drive slowly with them installed. If you hear them coming into contact with the body or chassis, stop and investigate. Remove them as soon as you begin driving on cleared roads.

NOTICE

Traction devices that are the wrong size or improperly installed can damage your vehicle's brake lines, suspension, body, and wheels. Stop driving if they are hitting any part of the vehicle.

⚠ WARNING

Using the wrong chains, or not properly installing chains, can damage the brake lines and cause a crash in which you can be seriously injured or killed.

Follow all instructions in this owner's manual regarding the selection and use of tire chains.

Wheels

Clean the wheels as you would the rest of the exterior. Wash them with the same solution, and rinse them thoroughly.

Aluminum alloy wheels have a protective clear-coat that keeps the aluminum from corroding and tarnishing. Cleaning the wheels with harsh chemicals (including some commercial wheel cleaners) or a stiff brush can damage the clear-coat. To clean the wheels, use a mild detergent and a soft brush or sponge.

Checking the Battery

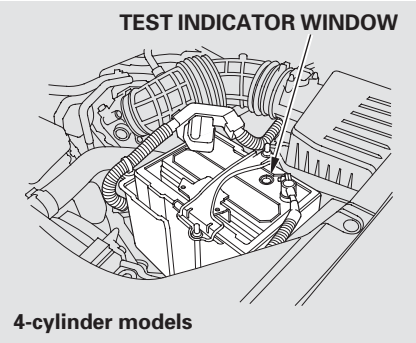

4-cylinder models

Check the condition of the battery monthly by looking at the test indicator window. The label on the battery explains the test indicator's colors.

The location of the test indicator window varies between manufacturers.

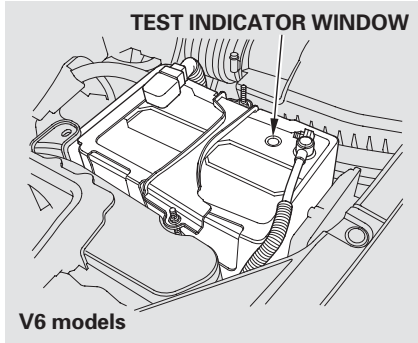

V6 models

Check the terminals for corrosion (a white or yellowish powder). To remove it, cover the terminals with a solution of baking soda and water. It will bubble up and turn brown. When this stops, wash it off with plain water. Dry off the battery with a cloth or paper towel. Coat the terminals with grease to help prevent future corrosion.

If additional battery maintenance is needed, see your dealer or a qualified mechanic.

WARNING: Battery posts, terminals, and related accessories contain lead and lead compounds. **Wash your hands after handling.**

If you need to connect the battery to a charger, disconnect both cables to prevent damaging your vehicle's electrical system. Always disconnect the negative (−) cable first, and reconnect it last.

CONTINUED

Checking the Battery, Vehicle Storage

⚠ WARNING

The battery gives off explosive hydrogen gas during normal operation.

A spark or flame can cause the battery to explode with enough force to kill or seriously hurt you.

Wear protective clothing and a face shield, or have a skilled technician do the battery maintenance.

If your vehicle's battery is disconnected, or goes dead, the time setting may be lost. To reset the time, see page 201.

If your vehicle's battery is disconnected or goes dead, the audio system may disable itself. The next time you turn on the radio, you will see "ENTER CODE" in the frequency display. Use the preset buttons to enter the code (see page 200).

On models with navigation system
The navigation system will also disable itself. The next time you turn on the ignition switch, the system will require you to enter a PIN before it can be used. Refer to the navigation system manual.

Vehicle Storage
If you need to park your vehicle for an extended period (more than 1 month), there are several things you should do to prepare it for storage. Proper preparation helps prevent deterioration and makes it easier to get your vehicle back on the road. If possible, store your vehicle indoors.

- Fill the fuel tank.
- Wash and dry the exterior completely.
- Clean the interior. Make sure the carpeting, floor mats, etc., are completely dry.

- Leave the parking brake off. Put the transmission in reverse (manual) or Park (automatic).
- Block the rear wheels.
- If the vehicle is to be stored for a longer period, it should be supported on jackstands so the tires are off the ground.
- Leave one window open slightly (if the vehicle is being stored indoors).
- Disconnect the battery.
- Support the front wiper blade arms with a folded towel or rag so they do not touch the windshield.
- To minimize sticking, apply a silicone spray lubricant to all door and trunk seals. Also, apply a vehicle body wax to the painted surfaces that mate with the door and trunk seals.
- Cover the vehicle with a “breathable” cover, one made from a porous material such as cotton. Non-porous materials, such as plastic sheeting, trap moisture, which can damage the paint.
- If possible, periodically run the engine until it reaches full operating temperature (the cooling fans cycle on and off twice). Preferably, do this once a month.

Taking Care of the Unexpected

This section covers the more common problems that motorists experience with their vehicles. It gives you information about how to safely evaluate the problem and what to do to correct it. If the problem has stranded you on the side of the road, you may be able to get going again. If not, you will also find instructions on getting your vehicle towed.

Compact Spare Tire..... 342
Changing a Flat Tire 343
If the Engine Won't Start..... 348
Jump Starting 350
If the Engine Overheats 353
Low Oil Pressure Indicator 355
Charging System Indicator..... 355
Malfunction Indicator Lamp 356
Brake System Indicator 357
Fuses 358
Fuse Locations 362
Emergency Towing 365

Compact Spare Tire

Use the compact spare tire as a temporary replacement only. Get your regular tire repaired or replaced, and put it back on your vehicle as soon as you can.

Check the air pressure of the compact spare tire every time you check the other tires. It should be inflated to:

60 psi (420 kPa , 4.2 kgf/cm²)

Follow these precautions:

- Never exceed 50 mph (80 km/h).
- This tire gives a harsher ride and less traction on some road surfaces. Use greater caution while driving.
- Do not mount snow chains on the compact spare tire.
- Do not use your compact spare tire on another vehicle unless it is the same make and model.
- The low tire pressure indicator comes on and stays on after you replace the flat tire with the compact spare tire. After several miles (kilometers) driving with the compact spare tire, the TPMS indicator comes on and the low tire pressure indicator goes off.

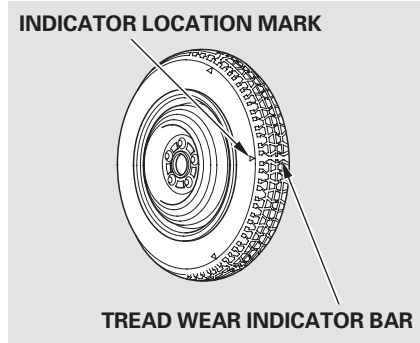

Replace the tire when you can see the tread wear indicator bars. The replacement should be the same size and design tire, mounted on the same wheel. The spare tire is not designed to be mounted on a regular wheel, and the spare wheel is not designed for mounting a regular tire.

If you have a flat tire while driving, pull over safely. Drive slowly along the shoulder until you get to an area far away from traffic lanes.

⚠ WARNING

The vehicle can easily roll off the jack, seriously injuring anyone underneath.

Follow the directions for changing a tire exactly, and never get under the vehicle when it is supported only by the jack.

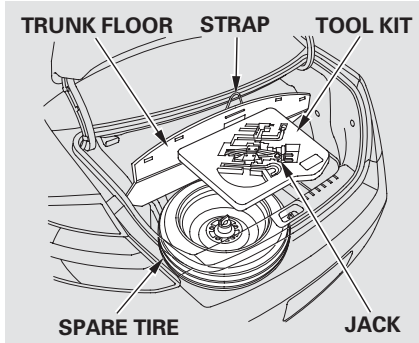

1. Park the vehicle on firm, level, and non-slippery ground. Put the transmission in Park (automatic) or reverse (manual). Apply the parking brake.
2. Turn on the hazard warning lights, and turn the ignition switch to the LOCK (0) position. Have all passengers get out of the vehicle while you change the tire.
3. The tools are in the trunk. Open the trunk and raise the trunk floor by pulling up the strap.
4. Take the tool kit out of the trunk.
5. Unscrew the wing bolt and take the spare tire out of its well.

CONTINUED

Changing a Flat Tire

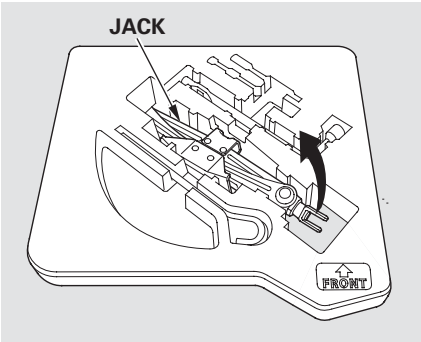

6. Take the jack out of the tool kit case.

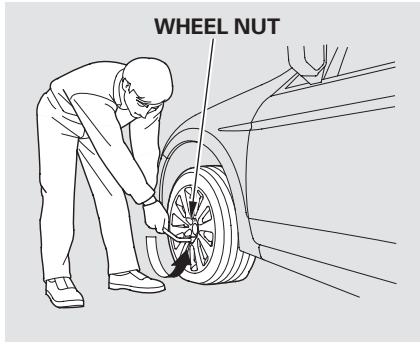

7. Loosen each wheel nut 1/2 turn with the wheel nut wrench.

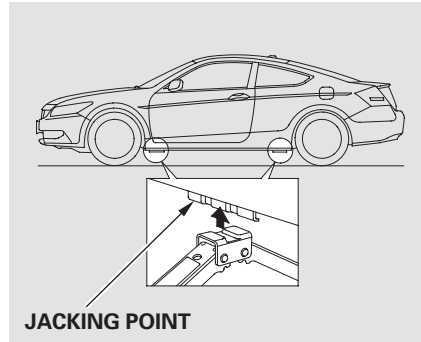

8. Place the jack under the jacking point nearest the tire you need to change. Turn the end bracket clockwise until the top of the jack contacts the jacking point. Make sure the jacking point tab is resting in the jack notch.

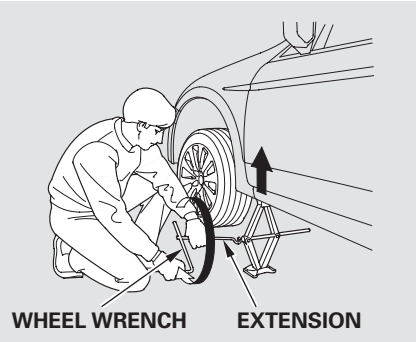

9. Use the extension and the wheel nut wrench as shown to raise the vehicle until the flat tire is off the ground.

10. Remove the wheel nuts, then remove the flat tire. Handle the wheel nuts carefully; they may be hot from driving. Place the flat tire on the ground with the outside surface facing up.

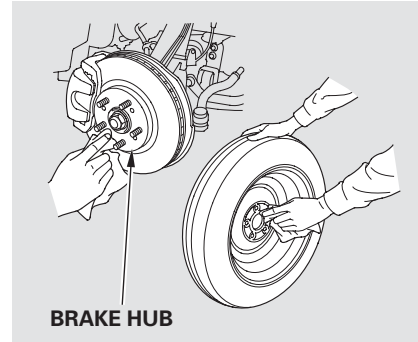

11. Before mounting the spare tire, wipe any dirt off the mounting surface of the wheel and hub with a clean cloth. Wipe the hub carefully; it may be hot from driving.

CONTINUED

Changing a Flat Tire

12. Put on the spare tire. Put the wheel nuts back on finger-tight, then tighten them in a crisscross pattern with the wheel nut wrench until the wheel is firmly against the hub. Do not try to tighten the wheel nuts fully.

13. Lower the vehicle to the ground, and remove the jack.

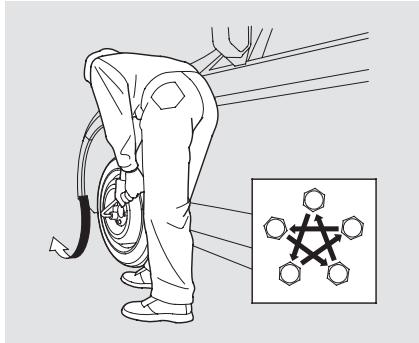

14. Tighten the wheel nuts securely in the same crisscross pattern. Have the wheel nut torque checked at the nearest automotive service facility.
    Tighten the wheel nuts to:
    80 lbf·ft (108 N·m , 11 kgf·m)

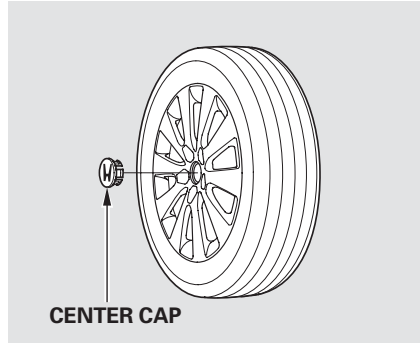

15. Remove the center cap before storing the flat tire in the trunk well.

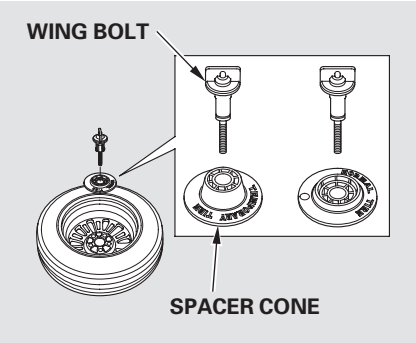

16. Place the flat tire face down in the spare tire well.

17. Remove the spacer cone from the wing bolt, turn it over, and put it back on the bolt.

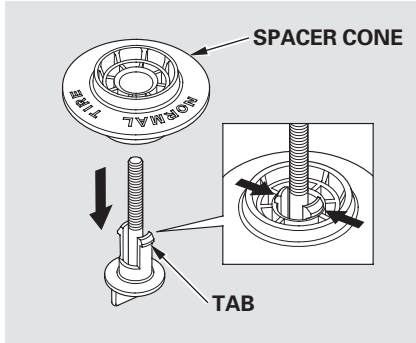

To remove the spacer cone, squeeze the tabs on the wing bolt to disengage it from the center of the spacer cone, then pull the bolt downward.

To install the wing bolt to the spacer cone, reverse this procedure.

18. Secure the flat tire by screwing the wing bolt back into its hole.

19. Store the jack and tools in the tool kit case. Place the tool kit case in the flat tire.

⚠ WARNING

Loose items can fly around the interior in a crash and could seriously injure the occupants.

Store the wheel, jack, and tools securely before driving.

20. Store the center cap in the trunk. Make sure it does not get scratched or damaged.

21. Lower the trunk floor, then close the trunk lid.

22. Your vehicle's original tire has a tire pressure monitoring system sensor. To replace a tire, refer to **Changing a Tire with TPMS** (see page 280).

If the Engine Won't Start

Diagnosing why the engine won't start falls into two areas, depending on what you hear when you turn the ignition switch to the START (III) position:

- You hear nothing, or almost nothing. The engine's starter motor does not operate at all, or operates very slowly.
- You can hear the starter motor operating normally, or the starter motor sounds like it is spinning faster than normal, but the engine does not start up and run.

Nothing Happens or the Starter Motor Operates Very Slowly

When you turn the ignition switch to the START (III) position, you do not hear the normal noise of the engine trying to start. You may hear a clicking sound, a series of clicks, or nothing at all.

Check these things:

- Check the transmission interlock. If you have a manual transmission, the clutch pedal must be pushed all the way to the floor or the starter will not operate. With an automatic transmission, it must be in Park or neutral.
- Turn the ignition switch to the ON (II) position. Turn on the headlights, and check their brightness. If the headlights are very dim or do not come on at all, the battery is discharged. See **Jump Starting** on page 350 .
- Turn the ignition switch to the START (III) position. If the headlights do not dim, check the condition of the fuses. If the fuses are OK, there is probably something wrong with the electrical circuit for the ignition switch or starter motor. You will need a qualified mechanic to determine the problem (see **Emergency Towing** on page 365).

If the headlights dim noticeably or go out when you try to start the engine, either the battery is discharged or the connections are corroded. Check the condition of the battery connections (see page 337). You can then try jump starting the vehicle from a booster battery (see page 350).

The Starter Operates Normally
In this case, the starter motor's speed sounds normal, or even faster than normal, when you turn the ignition switch to the START (III) position, but the engine does not run.

- Are you using the proper starting procedure? Refer to **Starting the Engine** on page 263.
- Are you using a properly coded key? An improperly coded key will cause the immobilizer system indicator in the instrument panel to blink rapidly (see page 78).
- Do you have fuel? Check the fuel gauge; the low fuel indicator may not be working.
- There may be an electrical problem, such as no power to the fuel pump. Check all the fuses (see page 358).

If you find nothing wrong, you will need a qualified technician to find the problem. See **Emergency Towing** on page 365.

Jump Starting

Although this seems like a simple procedure, you should take several precautions.

⚠ WARNING

A battery can explode if you do not follow the correct procedure, seriously injuring anyone nearby.

Keep all sparks, open flames, and smoking materials away from the battery.

You cannot start your vehicle with an automatic transmission by pushing or pulling it.

To jump start your vehicle:

1. Open the hood, and check the physical condition of the battery. In very cold weather, check the condition of the electrolyte. If it seems slushy or frozen, do not try jump starting until it thaws.

NOTICE

If a battery sits in extreme cold, the electrolyte inside can freeze. Attempting to jump start with a frozen battery can cause it to rupture.

2. Turn off all the electrical accessories: heater, A/C, audio system, lights, etc. Put the transmission in neutral (manual) or Park (automatic), and set the parking brake.

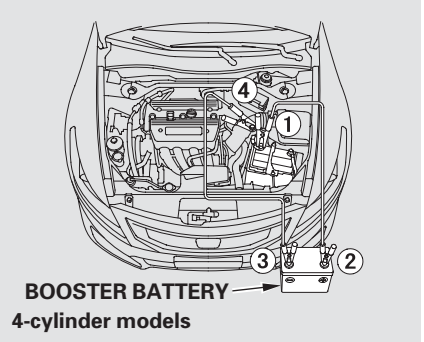

4-cylinder models

The numbers in the illustrations show you the order to connect the jumper cables.

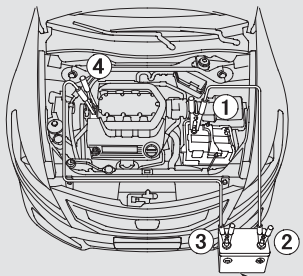

V6 models BOOSTER BATTERY

3. Connect one jumper cable to the positive (+) terminal on your battery. Connect the other end to the positive (+) terminal on the booster battery.

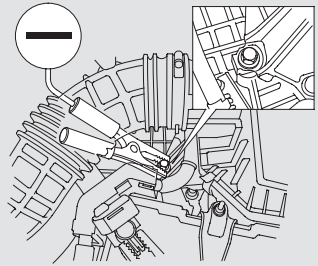

4-cylinder models with automatic transmission

4. *4-cylinder models*
Connect the second jumper cable to the negative (−) terminal on the booster battery. Connect the other end to the engine mounting bolt (automatic) or the transmission mounting bolt (manual), as shown. Do not connect this jumper cable to any other part of the engine.

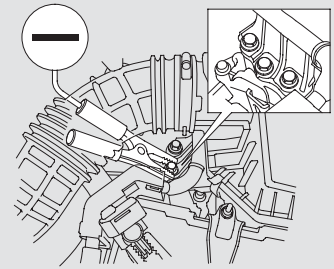

4-cylinder models with manual transmission

CONTINUED

Jump Starting

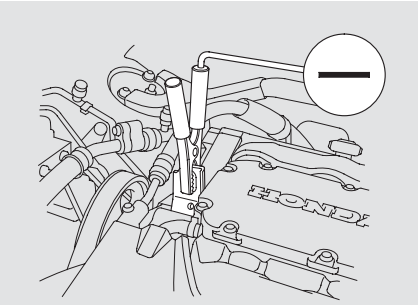

V6 models

V6 models
Connect the second jumper cable to the negative (−) terminal on the booster battery. Connect the other end to the engine hanger as shown. Do not connect this jumper cable to any other part of the engine.

5. If the booster battery is in another vehicle, have an assistant start that vehicle and run it at a fast idle.

6. Start the vehicle. If the starter motor still operates slowly, check that the jumper cables have good metal-to-metal contact.

7. Once your vehicle is running, disconnect the negative cable from your vehicle, then from the booster battery. Disconnect the positive cable from your vehicle, then from the booster battery.

Keep the ends of the jumper cables away from each other and any metal on the vehicle until everything is disconnected. Otherwise, you may cause an electrical short.

The pointer of your vehicle's temperature gauge should stay in the midrange under most conditions. If it climbs to the red mark, you should determine the reason (hot day, driving up a steep hill, etc.).

If your vehicle overheats, you should take immediate action. The only indication may be the temperature gauge climbing to or above the red mark. Or you may see steam or spray coming from under the hood.

NOTICE

Driving with the temperature gauge pointer at the red mark can cause serious damage to the engine.

⚠ WARNING

Steam and spray from an overheated engine can seriously scald you.

Do not open the hood if steam is coming out.

1. Safely pull to the side of the road. Put the transmission in neutral (manual) or Park (automatic), and set the parking brake. Turn off all accessories, and turn on the hazard warning lights.

2. If you see steam and/or spray coming from under the hood, turn off the engine. Wait until you see no more signs of steam or spray, then open the hood.

3. If you do not see steam or spray, leave the engine running and watch the temperature gauge. If the high heat is due to overloading, the engine should start to cool down almost immediately. If it does, wait until the temperature gauge comes down to the midpoint, then continue driving.

4. If the temperature gauge stays at the red mark, turn off the engine.

5. Look for any obvious coolant leaks, such as a split radiator hose. Everything is still extremely hot, so use caution. If you find a leak, it must be repaired before you continue driving (see **Emergency Towing** on page 365).

CONTINUED

If the Engine Overheats

6. If you do not find an obvious leak, check the coolant level in the radiator reserve tank. Add coolant if the level is below the MIN mark.

7. If there was no coolant in the reserve tank, you may need to add coolant to the radiator. Let the engine cool down until the pointer reaches the middle of the temperature gauge, or lower, before checking the radiator.

⚠ WARNING

Removing the radiator cap while the engine is hot can cause the coolant to spray out, seriously scalding you.

Always let the engine and radiator cool down before removing the radiator cap.

8. Using gloves or a large heavy cloth, turn the radiator cap counterclockwise, without pushing down, to the first stop. After the pressure releases, push down on the cap, and turn it until it comes off.

9. Start the engine, and set the temperature to maximum heat (climate control to AUTO at " Hi "). Add coolant to the radiator up to the base of the filler neck. If you do not have the proper coolant mixture available, you can add plain water. Remember to have the cooling system drained and refilled with the proper mixture as soon as you can.

10. Put the radiator cap back on tightly. Run the engine, and check the temperature gauge. If it goes back to the red mark, the engine needs repair (see **Emergency Towing** on page 365).

11. If the temperature stays normal, check the coolant level in the radiator reserve tank. If it has gone down, add coolant to the MAX mark. Put the cap back on tightly.

Low Oil Pressure Indicator, Charging System Indicator

Low Oil Pressure Indicator

This indicator should never come on when the engine is running. If it starts flashing or stays on, the oil pressure has dropped very low or lost pressure. Serious engine damage is possible, and you should take immediate action.

NOTICE

Running the engine with low oil pressure can cause serious mechanical damage almost immediately. Turn off the engine as soon as you can safely get the vehicle stopped.

1. Safely pull off the road and shut off the engine. Turn on the hazard warning lights.
2. Let the vehicle sit for a minute. Open the hood, and check the oil level (see page 248). An engine very low on oil can lose pressure during cornering and other driving maneuvers.
3. If necessary, add oil to bring the level back to the full mark on the dipstick (see page 300).
4. Start the engine, and watch the oil pressure indicator. If it does not go out within 10 seconds, turn off the engine. There is a mechanical problem that needs to be repaired before you can continue driving (see **Emergency Towing** on page 365).

Charging System Indicator

If the charging system indicator comes on brightly when the engine is running, the battery is not being charged.

Immediately turn off all electrical accessories. Try not to use other electrically operated controls such as the power windows. Keep the engine running; starting the engine will discharge the battery rapidly.

Go to a service station or garage where you can get technical assistance.

Malfunction Indicator Lamp

If the indicator comes on while driving, it means one of the engine's emissions control systems may have a problem. Even though you may feel no difference in your vehicle's performance, it can reduce your fuel economy and cause increased emissions. Continued operation may cause serious damage.

If you have recently refueled your vehicle, the indicator coming on could be due to a loose or missing fuel fill cap. Tighten the cap until it clicks at least once. Tightening the cap will not turn the indicator off immediately; it takes several days of normal driving.

If the indicator comes on repeatedly, even though it may turn off as you continue driving, have your vehicle checked by your dealer as soon as possible.

NOTICE

If you keep driving with the malfunction indicator lamp on, you can damage your vehicle's emissions controls and the engine. Those repairs may not be covered by your vehicle's warranties.

If your vehicle has an automatic transmission, the malfunction indicator lamp may also come on with the "D" indicator.

Readiness Codes

Your vehicle has certain "readiness codes" that are part of the on-board diagnostics for the emissions systems. In some states, part of the emissions testing is to make sure these codes are set. If they are not set, the test cannot be completed.

If the battery in your vehicle has been disconnected or gone dead, these codes may be erased. It can take several days of driving under various conditions to set the codes again.

To check if they are set, turn the ignition switch to the ON (II) position, without starting the engine. The malfunction indicator lamp will come on for 20 seconds. If it then goes off, the readiness codes are set. If it blinks five times, the readiness codes are not set. If possible, do not take your vehicle for an emissions test until the readiness codes are set. Refer to **Emissions Testing** for more information (see page 383).

Brake System Indicator

U.S. BRAKE | Canada (!)

The brake system indicator normally comes on when you turn the ignition switch to the ON (II) position and as a reminder to check the parking brake. It will stay on if you do not fully release the parking brake.

If the brake system indicator comes on while driving, the brake fluid level is probably low. Press lightly on the brake pedal to see if it feels normal. If it does, check the brake fluid level the next time you stop at a service station (see page 312).

If the fluid level is low, take your vehicle to a dealer, and have the brake system inspected for leaks or worn brake pads.

However, if the brake pedal does not feel normal, you should take immediate action. A problem in one part of the system's dual circuit design will still give you braking at two wheels. You will feel the brake pedal go down much farther before the vehicle begins to slow down, and you will have to press harder on the pedal.

Slow down by shifting to a lower gear, and pull to the side of the road when it is safe. Because of the long distance needed to stop, it is hazardous to drive the vehicle. You should have it towed and repaired as soon as possible (see **Emergency Towing** on page 365).

If you must drive the vehicle a short distance in this condition, drive slowly and carefully.

If the ABS indicator and the VSA system indicator come on with the brake system indicator, have your vehicle inspected by your dealer immediately.

Fuses

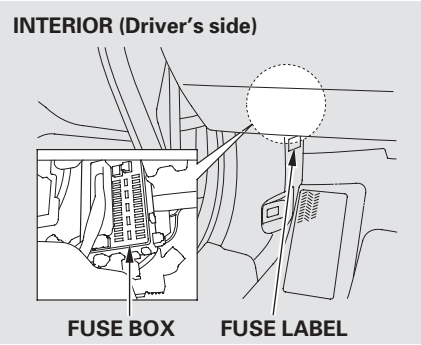

The vehicle's fuses are contained in three fuse boxes.

The driver's side interior fuse box is under the dashboard on the driver's side. The fuse label is attached to the side panel.

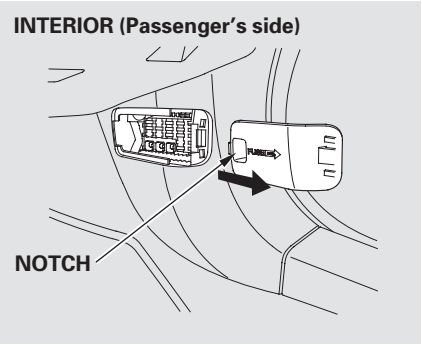

The passenger's side interior fuse box is on the lower passenger's side panel. To remove the fuse box lid, put your finger in the notch on the lid, and pull it upward slightly, then pull it toward you and take it out of its hinges.

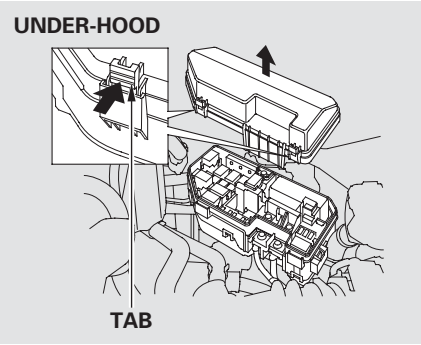

The under-hood fuse box is on the driver's side. To open it, push the tabs as shown.

Checking and Replacing Fuses

If something electrical in your vehicle stops working, the first thing you should check for is a blown fuse. Determine from the chart on pages 362 , 363 and 364 , or the diagram on the fuse box lid or the fuse label, which fuse or fuses control that component. Check those fuses first, but check all the fuses before deciding that a blown fuse is not the cause. Replace any blown fuses and check if the device works.

1. Turn the ignition switch to the LOCK (0) position. Make sure the headlights and all other accessories are off.

2. On the under-hood and passenger's side interior fuse boxes, remove the cover from each fuse box.

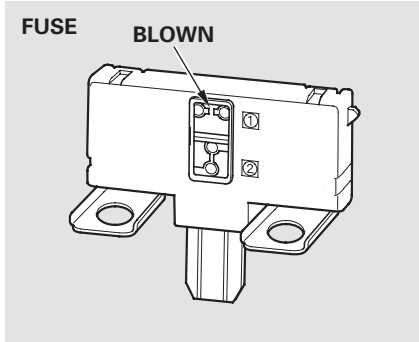

3. Check each of the large fuses in the under-hood fuse box by looking at the wire inside. Removing these fuses requires a Phillips-head screwdriver.

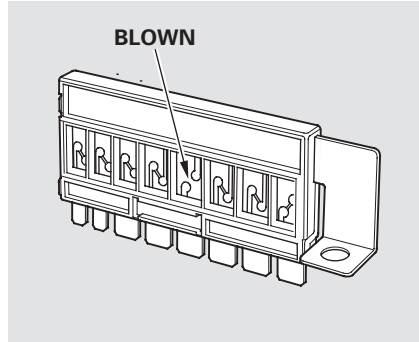

Also check the combined fuse box in the under-hood fuse box.

CONTINUED

Fuses

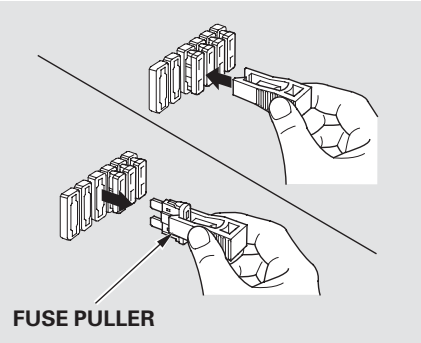

4. Check the smaller fuses in the under-hood fuse box and all the fuses in the interior fuse boxes by pulling out each one with the fuse puller provided on the back of the under-hood fuse box cover.

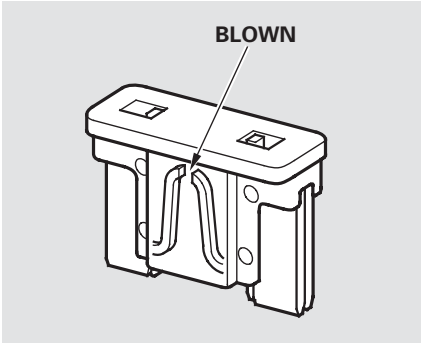

5. Look for a blown wire inside the fuse. If it is blown, replace it with one of the spare fuses of the same rating or lower.

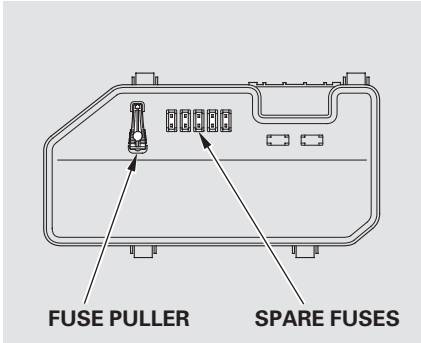

Your vehicle has spare fuses on the back of the under-hood fuse box cover.

If you cannot drive the vehicle without fixing the problem, and you do not have a spare fuse, take a fuse of the same rating or a lower rating from one of the other circuits. Make sure you can do without that circuit temporarily (such as the accessory power socket).

If you replace the blown fuse with a spare fuse that has a lower rating, it might blow out again. This does not indicate that anything is wrong. Replace the fuse with one of the correct rating as soon as you can.

NOTICE

Replacing a fuse with one that has a higher rating greatly increases the chances of damaging the electrical system. If you do not have a replacement fuse with the proper rating for the circuit, install one with a lower rating.

6. If the replacement fuse of the same rating blows in a short time, there is probably a serious electrical problem with your vehicle. Leave the blown fuse in that circuit, and have your vehicle checked by a qualified technician.

Fuse Locations

UNDER-HOOD FUSE BOX

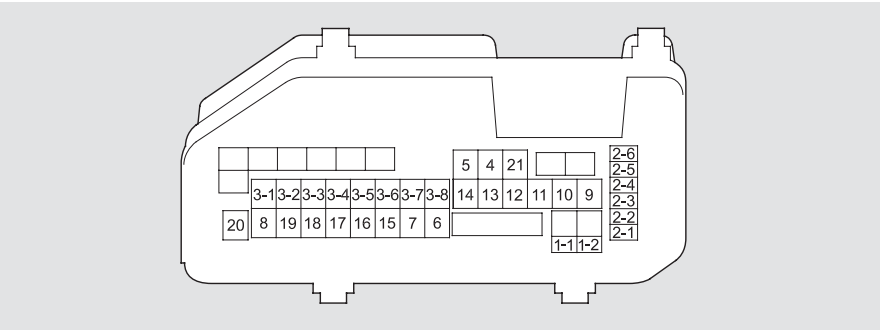

No.	Amps.	Circuits Protected
1	100 A*1	Battery
	120 A*2	Battery
	40 A	Passenger's Side Fuse Box
2 – 1	–	Not Used
2 – 2	40 A	ABS/VSA
2 – 3	30 A	ABS/VSA Motor
2 – 4	(40 A)	Passenger's Side Fuse Box
2 – 5	–	Not Used

No.	Amps.	Circuits Protected
2 – 6	–	Not Used
3 – 1*1	–	Not Used
3 – 1*2	30 A	Sub Fan Motor
3 – 2	30 A	Wiper Motor
3 – 3	30 A	Main Fan Motor
3 – 4	30 A	Driver's Side Light Main
3 – 5	(60 A)	Driver's Side Fuse Box
3 – 6	30 A	Passenger's Side Light Main

No.	Amps.	Circuits Protected
3 – 7	(40 A)	Driver's Side Fuse Box
3 – 8	50 A	IG Main
4	40 A	Rear Defroster
5*1	20 A	Sub Fan Motor
5*2	–	Not Used
6	–	Not Used
7	–	Not Used
8	40 A	Heater Motor
9	15 A	Hazard
10	20 A	Horn, Stop
11	–	Not Used
12	–	Not Used
13	15 A	IG Coil
14	15 A	FI Sub
15	10 A	Back Up
16	7.5 A	Interior Lights
17	15 A	FI Main
18	15 A	DBW
19*1	–	Not Used
19*2	7.5 A	Back Up, FI ECU
20	7.5 A	MG Clutch
21	7.5 A	Fan Relay

*1 : 4-cylinder models
*2 : V6 models

INTERIOR FUSE BOX (Driver's Side)

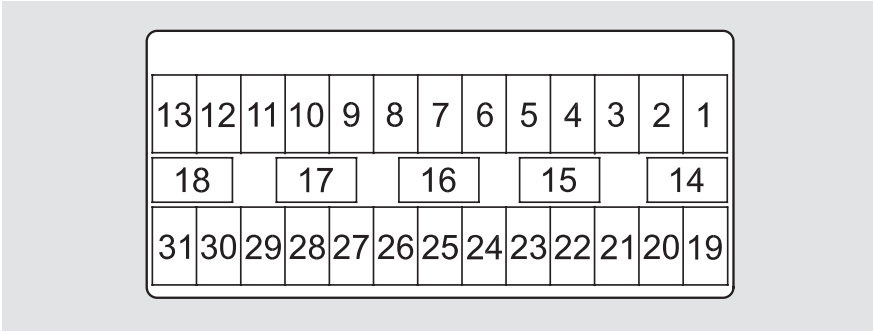

No.	Amps.	Circuits Protected
1	—	Not Used
2	—	Not Used
3	15 A	Washer
4	7.5 A	Wiper
5	7.5 A	Meter
6	7.5 A	ABS/VSA
7	15 A	ACG
8	(7.5 A)	STS*

No.	Amps.	Circuits Protected
9	20 A	Fuel Pump
10	(10 A)	VB SOL*
11	10 A	SRS
12	7.5 A	ODS (Occupant Detection System)
13	—	Not Used
14	(10 A)	ACM*
15	7.5 A	Daytime Running Lights

No.	Amps.	Circuits Protected
16	7.5 A	A/C
17	7.5 A	Accessory, Key, Lock
18	7.5 A	Accessory
19	(20 A)	Driver's Power Seat Sliding*
20	(20 A)	Moonroof*
21	(20 A)	Driver's Power Seat Reclining*
22	(20 A)	(Not Used)
23	15 A	Front Accessory Power Socket
24	20 A	Driver's Power Window
25	10 A	Driver's Side Door Lock
26	(10 A)	Left Front Fog Light*
27	10 A	Left Side Small Lights (Exterior)
28	10 A	Left Headlight High Beam
29	7.5 A	TPMS
30	10 A	Left Headlight Low Beam
31	—	Not Used

* : If equipped

Fuse Locations

INTERIOR FUSE BOX (Passenger's Side)

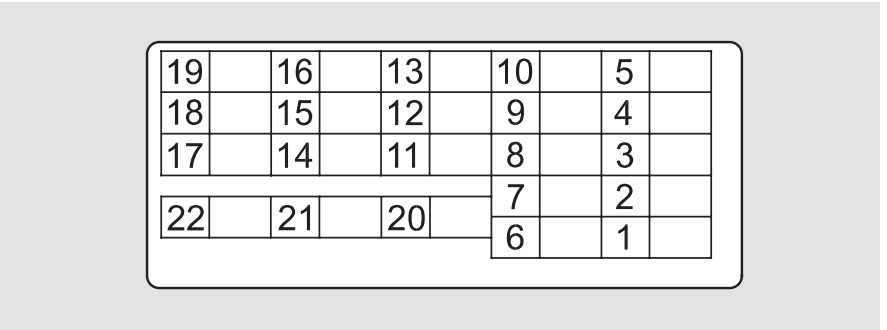

No.	Amps.	Circuits Protected
16	—	Not Used
17	—	Not Used
18	(10 A)	Lumbar Support*
19	(15 A)	Seat Heater*
20	—	Not Used
21	—	Not Used
22	—	Not Used

∗ : If equipped

No.	Amps.	Circuits Protected
1	10 A	Right Headlight High Beam
2	10 A	Right Side Small Lights (Exterior)
3	(10 A)	Right Front Fog Light*
4	10 A	Right Headlight Low Beam
5	—	Not Used
6	7.5 A	Interior Lights
7	—	Not Used
8	(20 A)	Not Used

No.	Amps.	Circuits Protected
9	(20 A)	Not Used
10	10 A	Right Side Door Lock
11	(20 A)	Not Used
12	15 A	Rear Accessory Power Socket
13	20 A	Front Passenger's Power Window
14	—	Not Used
15	(20 A)	Premium AMP*

If your vehicle needs to be towed, call a professional towing service or organization. Never tow your vehicle with just a rope or chain. It is very dangerous.

There are two ways to tow your vehicle:

Flat-bed Equipment — The operator loads your vehicle on the back of a truck. **This is the best way to transport your vehicle.**

Wheel-lift Equipment — The tow truck uses two pivoting arms that go under the front tires and lift them off the ground. The rear tires remain on the ground. **This is an acceptable way to tow your vehicle.**

If, due to damage, your vehicle must be towed with the front wheels on the ground, do this:

Manual transmission:
- Shift the transmission to neutral.
- Leave the ignition switch in the ACCESSORY (I) position so the steering wheel does not lock.
- Release the parking brake.

Automatic transmission:
- Start the engine.
- Shift to D position and hold for 5 seconds, then to N.
- Turn off the engine.
- Leave the ignition switch in the ACCESSORY (I) position so the steering wheel does not lock.
- Release the parking brake.

NOTICE

Improper towing preparation will damage the transmission. Follow the above procedure exactly. If you cannot shift the transmission or start the engine (automatic transmission), your vehicle must be transported with the front wheels off the ground.

With the front wheels on the ground, do not tow the vehicle more than 50 miles (80 km), and keep the speed below 35 mph (55 km/h).

CONTINUED

Emergency Towing

NOTICE

Trying to lift or tow your vehicle by the bumpers will cause serious damage. The bumpers are not designed to support the vehicle's weight.

NOTICE

The steering system can be damaged if the steering wheel is locked. Leave the ignition switch in the ACCESSORY (I) position, and make sure the steering wheel turns freely before you begin towing.

Technical Information

The diagrams in this section give you the dimensions and capacities of your vehicle and the locations of the identification numbers. It also includes information you should know about your vehicle's tires and emissions control systems.

Identification Numbers 368
Specifications
(4-cylinder models) 370
Specifications
(V6 models) 372
DOT Tire Quality Grading
(U.S. Vehicles) 374
Tire Labeling 376
Tire Pressure Monitoring System
(TPMS) — Required Federal
Explanation..... 378
Emissions Controls..... 380
Three Way Catalytic Converter... 382
Emissions Testing 383

Identification Numbers

Your vehicle has several identifying numbers in various places.

The vehicle identification number (VIN) is the 17-digit number your dealer uses to register your vehicle for warranty purposes. It is also necessary for licensing and insuring your vehicle. The easiest place to find the VIN is on a plate fastened to the top of the dashboard. You can see it by looking through the windshield on the driver's side. It is also on the certification label attached to the driver's doorjamb, and is stamped on the engine compartment bulkhead. The VIN is also provided in bar code on the certification label.

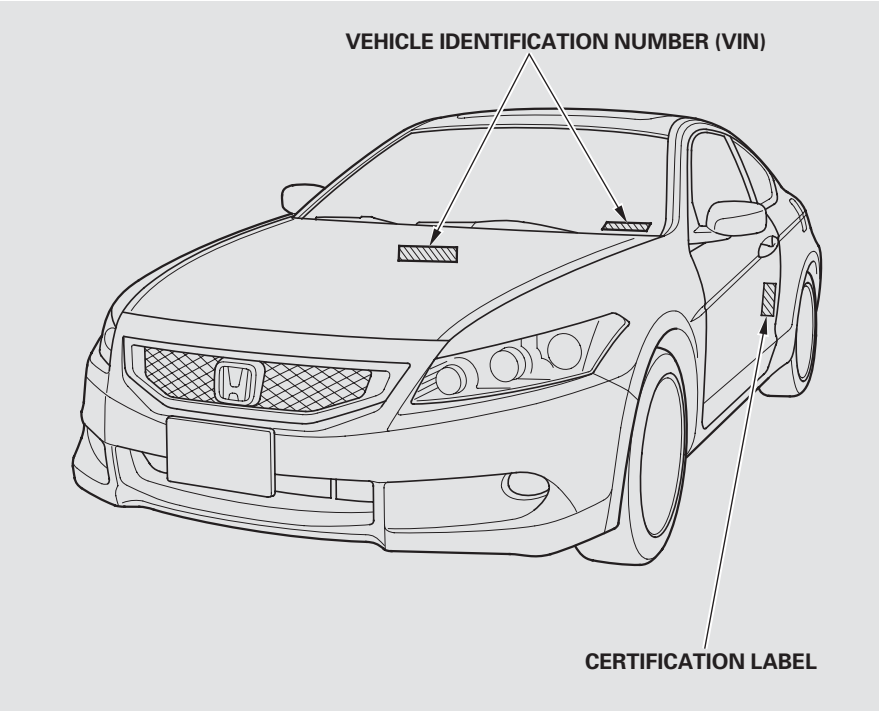

Identification Numbers

The engine number is stamped on the front of the engine block.

The transmission number is on a label on top of the transmission.

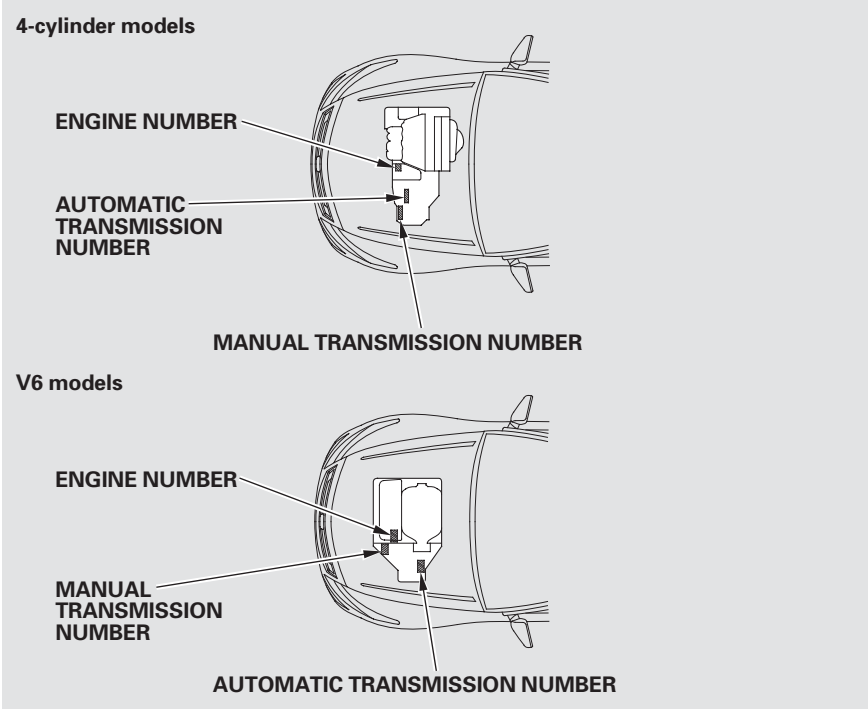

Specifications (4-cylinder models)

Dimensions

Length		190.9 in (4,849 mm)
Width		72.7 in (1,848 mm)
Height		56.3 in (1,432 mm)
Wheelbase		107.9 in (2,740 mm)
Track	Front/Rear	62.2 in (1,580 mm)

Weights

Gross vehicle weight rating	See the certification label attached to the driver's doorjamb.

Air Conditioning

Refrigerant type	HFC-134a (R-134a)
Charge quantity	14.1－15.9 oz (400－450 g)
Lubricant type	ND-OIL8

Engine

Type		Water cooled 4-stroke DOHC i-VTEC 4-cylinder gasoline engine
Bore x Stroke		3.43 x 3.9 in (87.0 x 99.0 mm)
Displacement		144 cu-in (2,354 cm³)
Compression ratio		10.5 : 1
Spark plugs (U.S.)		NGK: ILZKR7B11S
	ULEV	DENSO: SXU22HCR11S
	PZEV	NGK: DILZKR7A11GS
Spark plugs (Canada)		NGK: ILZKR7B11S DENSO: SXU22HCR11S

Seating Capacities

Total	5
Front	2
Rear	3

Capacities

Fuel tank		Approx. 18.5 US gal (70.0 ℓ)
Engine coolant	Change*1	
	Manual	1.59 US gal (6.0 ℓ)
	Automatic	1.56 US gal (5.9 ℓ)
	Total	
	Manual	1.90 US gal (7.2 ℓ)
	Automatic	1.88 US gal (7.1 ℓ)
Engine oil	Change*2	
	Including filter	4.2 US qt (4.0 ℓ)
	Without filter	4.0 US qt (3.8 ℓ)
	Total	5.4 US qt (5.1 ℓ)
Manual transmission fluid	Change	2.0 US qt (1.9 ℓ)
	Total	2.1 US qt (2.0 ℓ)
Automatic transmission fluid	Change	2.6 US qt (2.5 ℓ)
	Total	6.9 US qt (6.5 ℓ)
Windshield washer reservoir	U.S.	2.6 US qt (2.5 ℓ)
	Canada	4.8 US qt (4.5 ℓ)

*1 : Including the coolant in the reserve tank and that remaining in the engine
Reserve tank capacity: 0.180 US gal (0.68 ℓ)

*2 : Excluding the oil remaining in the engine

Specifications (4-cylinder models)

Lights

Headlights	High	12 V — 60 W (HB3)
	Low	12 V — 55 W (H11)
Front turn signal/parking lights		12 V — 24/2.2 CP (Amber)
Front side marker lights		12 V — 5 W
Rear turn signal lights		12 V — 21 W
Back-up lights		12 V — 16 W
Stop/taillights		12 V — 21/5 W
License plate lights		12 V — 5 W
High-mount brake light		12 V — 21 W
Ceiling light		12 V — 8 W
Spotlights		12 V — 8 W
Trunk light		12 V — 5 W
Vanity mirror lights		14 V — 1.4 W

Battery

Capacity	12 V — 38 AH/5 HR
	12 V — 47 AH/20 HR
	12 V — 52 AH/5 HR *
	12 V — 65 AH/20 HR *

* : PZEV engine model, and Canadian models

Fuses

Interior	Driver's side	See page 363 or the fuse label attached on the side panel.
	Passenger's side	See page 364 or the fuse label attached to the inside of the fuse box door.
Under-hood		See page 362 or the fuse box cover.

Tires

Size	Front/Rear	P225/50R17 93V
	Spare	T135/80D16 101M
Pressure	Front/Rear	32 psi (220 kPa , 2.2 kgf/cm²)
	Spare	60 psi (420 kPa , 4.2 kgf/cm²)

Alignment

Toe-in	Front	0.00 in (0.0 mm)
	Rear	0.08 in (2.0 mm)
Camber	Front	0°
	Rear	−1°
Caster	Front	3°48′

Specifications (V6 models)

Dimensions

Length		190.9 in (4,849 mm)
Width		72.7 in (1,848 mm)
Height		56.3 in (1,432 mm)
Wheelbase		107.9 in (2,740 mm)
Track	Front/Rear	62.2 in (1,580 mm)

Weights

Gross vehicle weight rating	See the certification label attached to the driver's doorjamb.

Air Conditioning

Refrigerant type	HFC-134a (R-134a)
Charge quantity	14.1－15.9 oz (400－450 g)
Lubricant type	ND-OIL8

Engine

Type		Water cooled 4-stroke SOHC i-VTEC (SOHC VTEC*) 6-cylinder (V6) gasoline engine
Bore x Stroke		3.50 x 3.66 in (89.0 x 93.0 mm)
Displacement		212 cu-in (3,471 cm³)
Compression ratio	Automatic	10.5 : 1
	Manual	10.0 : 1
Spark plugs (U.S.)		NGK: ILZKR7B11 DENSO: SXU22HCR11
Spark plugs (Canada)		NGK: ILZKR7B11 DENSO: SXU22HCR11

* : Manual transmission

Seating Capacities

Total	5
Front	2
Rear	3

Capacities

Fuel tank		Approx. 18.5 US gal (70.0 ℓ)
Engine coolant	Change*1	1.74 US gal (6.6 ℓ)
	Total	2.27 US gal (8.6 ℓ)
Engine oil	Change*2	
	Including filter	4.5 US qt (4.3 ℓ)
	Without filter	4.2 US qt (4.0 ℓ)
	Total	5.3 US qt (5.0 ℓ)
Manual transmission fluid	Change	2.2 US qt (2.1 ℓ)
	Total	2.6 US qt (2.5 ℓ)
Automatic transmission fluid	Change	3.5 US qt (3.3 ℓ)
	Total	7.9 US qt (7.5 ℓ)
Windshield washer reservoir	U.S.	2.6 US qt (2.5 ℓ)
	Canada	4.8 US qt (4.5 ℓ)

*1 : Including the coolant in the reserve tank and that remaining in the engine
Reserve tank capacity: 0.180 US gal (0.68 ℓ)
*2 : Excluding the oil remaining in the engine

Specifications (V6 models)

Lights

Headlights	High	12 V — 60 W (HB3)
	Low	12 V — 55 W (H11)
Front turn signal/parking lights		12 V — 24/2.2 CP (Amber)
Front side marker lights		12 V — 5 W
Fog lights		12 V — 55 W (H11)
Rear turn signal lights		12 V — 21 W
Back-up lights		12 V — 16 W
Stop/taillights		12 V — 21/5 W
License plate lights		12 V — 5 W
High-mount brake light		12 V — 21 W
Ceiling light		12 V — 8 W
Spotlights		12 V — 8 W
Trunk light		12 V — 5 W
Vanity mirror lights		14 V — 1.4 W

Battery

Capacity	12 V — 72 AH/20 HR 12 V — 60 AH/5 HR

Fuses

Interior	Driver's side	See page 363 or the fuse label attached on the side panel.
	Passenger's side	See page 364 or the fuse label attached to the inside of the fuse box door.
Under-hood		See page 362 or the fuse box cover.

Tires

Size	Front/Rear	P235/45R18 94V
	Spare	T135/80D16 101M
Pressure	Front/Rear	32 psi (220 kPa , 2.2 kgf/cm²)
	Spare	60 psi (420 kPa , 4.2 kgf/cm²)

Alignment

Toe-in	Front	0.00 in (0.0 mm)
	Rear	0.08 in (2.0 mm)
Camber	Front	0°
	Rear	−1°
Caster	Front	3°48′

DOT Tire Quality Grading (U.S. Vehicles)

The tires on your vehicle meet all U.S. Federal Safety Requirements. All tires are also graded for treadwear, traction, and temperature performance according to Department of Transportation (DOT) standards. The following explains these gradings.

Uniform Tire Quality Grading
Quality grades can be found where applicable on the tire sidewall between tread shoulder and maximum section width. For example:

Treadwear 200
Traction AA
Temperature A

All passenger car tires must conform to Federal Safety Requirements in addition to these grades.

Treadwear
The treadwear grade is a comparative rating based on the wear rate of the tire when tested under controlled conditions on a specified government test course. For example, a tire graded 150 would wear one and one-half (1 1/2) times as well on the government course as a tire graded 100. The relative performance of tires depends upon the actual conditions of their use, however, and may depart significantly from the norm due to variations in driving habits, service practices and differences in road characteristics and climate.

Traction
The traction grades, from highest to lowest, are AA, A, B, and C. Those grades represent the tire's ability to stop on wet pavement as measured under controlled conditions on specified government test surfaces of asphalt and concrete. A tire marked C may have poor traction performance.

Warning: The traction grade assigned to this tire is based on straight-ahead braking traction tests, and does not include acceleration, cornering, hydroplaning, or peak traction characteristics.

DOT Tire Quality Grading (U.S. Vehicles)

Temperature
The temperature grades are A (the highest), B, and C, representing the tire's resistance to the generation of heat and its ability to dissipate heat when tested under controlled conditions on a specified indoor laboratory test wheel. Sustained high temperature can cause the material of the tire to degenerate and reduce tire life, and excessive temperature can lead to sudden tire failure. The grade C corresponds to a level of performance which all passenger car tires must meet under the Federal Motor Vehicle Safety Standard No. 109. Grades B and A represent higher levels of performance on the laboratory test wheel than the minimum required by law.

Warning: The temperature grade for this tire is established for a tire that is properly inflated and not overloaded. Excessive speed, underinflation, or excessive loading, either separately or in combination, can cause heat buildup and possible tire failure.

Tire Labeling

The tires that came on your vehicle have a number of markings. Those you should be aware of are described below.

Tire Labeling Example

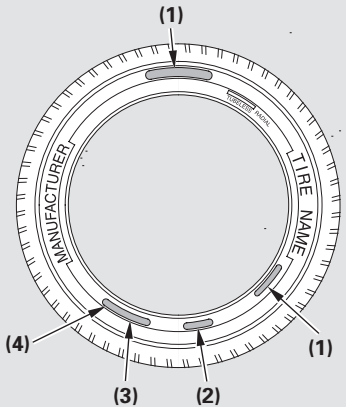

(1) Tire Size
(2) Tire Identification Number (TIN)
(3) Maximum Tire Pressure
(4) Maximum Tire Load

Tire Size

Whenever tires are replaced, they should be replaced with tires of the same size. Following is an example of tire size with an explanation of what each component means.

P235/45R18 94V

P — Vehicle type (P indicates passenger vehicle).

235 — Tire width in millimeters.

45 — Aspect ratio (the tire's section height as a percentage of its width).

R — Tire construction code (R indicates radial).

18 — Rim diameter in inches.

94 — Load index (a numerical code associated with the maximum load the tire can carry).

V — Speed symbol (an alphabetical code indicating the maximum speed rating).

Tire Identification Number (TIN)
The tire identification number (TIN) is a group of numbers and letters that look like the following example. TIN is located on the sidewall of the tire.

DOT B97R FW6X 2202

DOT — This indicates that the tire meets all requirements of the U.S. Department of Transportation.

B97R — Manufacturer's identification mark.

FW6X — Tire type code.

2202 — Date of manufacture.
Year
Week

Glossary of Tire Terminology
Cold Tire Pressure — The tire air pressure when the vehicle has been parked for at least three hours or driven less than 1 mile (1.6 km).

Load Rating — Means the maximum load that a tire is rated to carry for a given inflation pressure.

Maximum Inflation Pressure — The maximum tire air pressure that the tire can hold.

Maximum Load Rating — Means the load rating for a tire at the maximum permissible inflation pressure for that tire.

Recommended Inflation Pressure — The cold tire inflation pressure recommended by the manufacturer.

Treadwear Indicators (TWI) — Means the projections within the principal grooves designed to give a visual indication of the degrees of wear of the tread.

Tire Pressure Monitoring System (TPMS) – Required Federal Explanation

Each tire, including the spare (if provided), should be checked monthly when cold and inflated to the inflation pressure recommended by the vehicle manufacturer on the vehicle placard or tire inflation pressure label.

(If your vehicle has tires of a different size than the size indicated on the vehicle placard or tire inflation pressure label, you should determine the proper tire inflation pressure for those tires.)

As an added safety feature, your vehicle has been equipped with a tire pressure monitoring system (TPMS) that illuminates a low tire pressure telltale

when one or more of your tires is significantly under-inflated.

Accordingly, when the low tire pressure telltale illuminates, you should stop and check your tires as soon as possible, and inflate them to the proper pressure.

Driving on a significantly under-inflated tire causes the tire to overheat and can lead to tire failure. Under-inflation also reduces fuel efficiency and tire tread life, and may affect the vehicle's handling and stopping ability.

Please note that the TPMS is not a substitute for proper tire maintenance, and it is the driver's responsibility to maintain correct tire pressure, even if under-inflation has not reached the level to trigger illumination of the TPMS low tire pressure telltale.

Tire Pressure Monitoring System (TPMS) – Required Federal Explanation

Your vehicle has also been equipped with a TPMS malfunction indicator to indicate when the system is not operating properly. The TPMS malfunction indicator is provided by a separate telltale, which displays the symbol “TPMS” when illuminated.

When the malfunction indicator is illuminated,

TPMS

the system may not be able to detect or signal low tire pressure as intended.

TPMS malfunctions may occur for a variety of reasons, including the installation of replacement or alternate tires or wheels on the vehicle that prevent the TPMS from functioning properly.

Always check the TPMS malfunction telltale after replacing one or more tires or wheels on your vehicle to ensure that the replacement or alternate tires and wheels allow the TPMS to continue to function properly.

Emissions Controls

The burning of gasoline in your vehicle's engine produces several by-products. Some of these are carbon monoxide (CO), oxides of nitrogen (NOx), and hydrocarbons (HC). Gasoline evaporating from the tank also produces hydrocarbons. Controlling the production of NOx, CO, and HC is important to the environment. Under certain conditions of sunlight and climate, NOx and HC react to form photochemical "smog." Carbon monoxide does not contribute to smog creation, but it is a poisonous gas.

The Clean Air Act
The United States Clean Air Act* sets standards for automobile emissions. It also requires that automobile manufacturers explain to owners how their emissions controls work and what to do to maintain them. This section summarizes how the emissions controls work.

* In Canada, Honda vehicles comply with the Canadian emission requirements, as specified in an agreement with Environment Canada, at the time they are manufactured.

Crankcase Emissions Control System
Your vehicle has a positive crankcase ventilation system. This keeps gasses that build up in the engine's crankcase from going into the atmosphere. The positive crankcase ventilation valve routes them from the crankcase back to the intake manifold. They are then drawn into the engine and burned.

Evaporative Emissions Control System
As gasoline evaporates in the fuel tank, an evaporative emissions control canister filled with charcoal adsorbs the vapor. It is stored in this canister while the engine is off. After the engine is started and warmed up, the vapor is drawn into the engine and burned during driving.

Onboard Refueling Vapor Recovery
The onboard refueling vapor recovery (ORVR) system captures the fuel vapors during refueling. The vapors are adsorbed in a canister filled with activated carbon. While driving, the fuel vapors are drawn into the engine and burned off.

Exhaust Emissions Controls

The exhaust emissions controls include three or four systems: PGM-FI, ignition timing control, exhaust gas recirculation (6-cylinder models), and three way catalytic converter. These systems work together to control the engine's combustion and minimize the amount of HC, CO, and NOx that come out the tailpipe. The exhaust emissions control systems are separate from the crankcase and evaporative emissions control systems.

PGM-FI System

The PGM-FI system uses sequential multiport fuel injection. It has three subsystems: air intake, engine control, and fuel control. The powertrain control module (PCM) in automatic transmission vehicles or the engine control module (ECM) in manual transmission vehicles uses various sensors to determine how much air is going into the engine. It then controls how much fuel to inject under all operating conditions.

Ignition Timing Control System

This system constantly adjusts the ignition timing, reducing the amount of HC, CO, and NOx produced.

Exhaust Gas Recirculation (EGR) System

V6 models

The exhaust gas recirculation (EGR) system takes some of the exhaust gas and routes it back into the intake manifold. Adding exhaust gas to the air/fuel mixture reduces the amount of NOx produced when the fuel is burned.

Three Way Catalytic Converter

The three way catalytic converter is in the exhaust system. Through chemical reactions, it converts HC, CO, and NOx in the engine's exhaust to carbon dioxide (CO_2), nitrogen (N_2), and water vapor.

Replacement Parts

The emissions control systems are designed and certified to work together in reducing emissions to levels that comply with the Clean Air Act. To make sure the emissions remain low, you should use only new Honda replacement parts or their equivalent for repairs. Using lower quality parts may increase the emissions from your vehicle.

The emissions control systems are covered by warranties separate from the rest of your vehicle. Read your warranty manual for more information.

Three Way Catalytic Converter

The three way catalytic converter contains precious metals that serve as catalysts, promoting chemical reactions to convert the exhaust gasses without affecting the metals. The catalytic converter is referred to as a three-way catalyst, since it acts on HC, CO, and NOx. A replacement unit must be an original Honda part or its equivalent.

The three way catalytic converter must operate at a high temperature for the chemical reactions to take place. It can set on fire any combustible materials that come near it. Park your vehicle away from high grass, dry leaves, or other flammables.

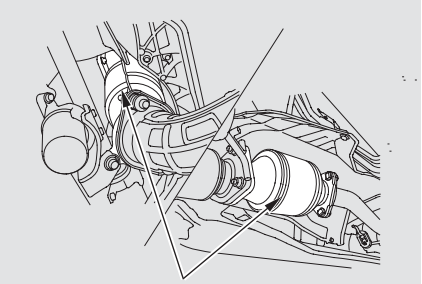

THREE WAY CATALYTIC CONVERTERS
4-cylinder models

A defective three way catalytic converter contributes to air pollution, and can impair your engine's performance. Follow these guidelines to protect your vehicle's three way catalytic converter.

- Always use unleaded gasoline. Even a small amount of leaded gasoline can contaminate the catalyst metals, making the three way catalytic converter ineffective.

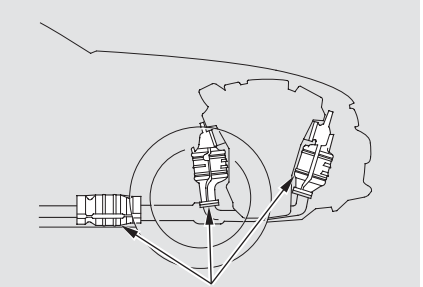

THREE WAY CATALYTIC CONVERTERS
V6 models

- Keep the engine well maintained.
- Have your vehicle diagnosed and repaired if it is misfiring, back-firing, stalling, or otherwise not running properly.

Testing of Readiness Codes
If you take your vehicle for an emissions test shortly after the battery has been disconnected or gone dead, it may not pass the test. This is because of certain “readiness codes” that must be set in the on-board diagnostics for the emissions systems. These codes are erased when the battery is disconnected, and set again only after several days of driving under a variety of conditions.

If the testing facility determines that the readiness codes are not set, you will be requested to return at a later date to complete the test. If you must get the vehicle retested within the next two or three days, you can condition the vehicle for retesting by doing the following.

1. Make sure the gas tank is nearly, but not completely, full (around 3/4).

2. Make sure the vehicle has been parked with the engine off for 6 hours or more.

3. Make sure the ambient temperature is between 40° and 95°F (4° and 35°C).

4. Without touching the accelerator pedal, start the engine, and let it idle for 20 seconds.

5. Keep the vehicle in Park (automatic) or neutral (manual). Increase the engine speed to 2,000 rpm, and hold it there until the temperature gauge rises to at least 1/4 of the scale (about 3 minutes).

6. Without touching the accelerator pedal, let the engine idle for 20 seconds.

CONTINUED

Emissions Testing

7. Select a nearby lightly traveled major highway where you can maintain a speed of 50 to 60 mph (80 to 97 km/h) for at least 20 minutes. Drive on the highway in D (automatic) or 5th (manual). Do not use the cruise control. When traffic allows, drive for 90 seconds without moving the accelerator pedal. (Vehicle speed may vary slightly; this is okay.) If you cannot do this for a continuous 90 seconds because of traffic conditions, drive for at least 30 seconds, then repeat it two more times (for a total of 90 seconds).
8. Then drive in city/suburban traffic for at least 10 minutes. When traffic conditions allow, let the vehicle coast for several seconds without using the accelerator pedal or the brake pedal.
9. Make sure the vehicle has been parked with the engine off for 30 minutes.

If the testing facility determines the readiness codes are still not set, see your dealer.

Warranty and Customer Relations

Customer Service Information..... 386
Warranty Coverages 387
Reporting Safety Defects
(U.S. vehicles) 388
Authorized Manuals..... 389

Customer Service Information

Honda dealership personnel are trained professionals. They should be able to answer all your questions. If you encounter a problem that your dealership does not solve to your satisfaction, please discuss it with the dealership's management. The service manager or general manager can help. Almost all problems are solved in this way.

If you are dissatisfied with the decision made by the dealership's management, contact Honda Customer Service.

U.S. Owners:
American Honda Motor Co., Inc.
Automobile Customer Service
Mail Stop 500-2N-7A
1919 Torrance Boulevard
Torrance, California 90501-2746

Tel: (800) 999-1009

Canadian Owners:
Customer Relations
Honda Canada Inc.

Visit www.honda.ca for contact information

Tel: 1-888-9-HONDA-9
Fax: 1-877-939-0909

In Puerto Rico and the U.S. Virgin Islands:
Vortex Motor Corp.
Bella International
P.O. Box 190816
San Juan, PR 00919-0816

Tel: (787) 620-7546

When you call or write, please give us this information:

- Vehicle Identification Number (see page 368)
- Name and address of the dealer who services your vehicle
- Date of purchase
- Odometer reading of your vehicle
- Your name, address, and telephone number
- A detailed description of the problem
- Name of the dealer who sold the vehicle to you

Warranty Coverages

U.S. Owners

Your new vehicle is covered by these warranties:

New Vehicle Limited Warranty — covers your new vehicle, except for the battery, emissions control systems, and accessories, against defects in materials and workmanship.

Emissions Control Systems Defects Warranty and Emissions Performance Warranty — these two warranties cover your vehicle's emissions control systems. Time, mileage, and coverage are conditional. Please read your warranty booklet for exact information.

Original Equipment Battery Limited Warranty — this warranty gives up to 100% credit toward a replacement battery.

Seat Belt Limited Warranty — a seat belt that fails to function properly is covered by a limited warranty. Please read your warranty booklet for details.

Rust Perforation Limited Warranty — all exterior body panels are covered for rust-through from the inside for the specified time period with no mileage limit.

Accessory Limited Warranty — Honda accessories are covered under this warranty. Time and mileage limits depend on the type of accessory and other factors. Please read your warranty booklet for details.

Replacement Parts Limited Warranty — covers all Honda replacement parts against defects in materials and workmanship.

Replacement Battery Limited Warranty — provides prorated coverage for a replacement battery purchased from your dealer.

Replacement Muffler Lifetime Limited Warranty — provides coverage for as long as the purchaser of the muffler owns the vehicle.

Restrictions and exclusions apply to all these warranties. Please read the 2010 Honda warranty information booklet that came with your vehicle for precise information on warranty coverages. Your vehicle's original tires are covered by their manufacturer. Tire warranty information is in a separate booklet.

Canadian Owners

Please refer to the 2010 warranty manual that came with your vehicle.

Reporting Safety Defects (U.S. Vehicles)

If you believe that your vehicle has a defect which could cause a crash or could cause injury or death, you should immediately inform the National Highway Traffic Safety Administration (NHTSA) in addition to notifying American Honda Motor Co., Inc.

If NHTSA receives similar complaints, it may open an investigation, and if it finds that a safety defect exists in a group of vehicles, it may order a recall and remedy campaign. However, NHTSA cannot become involved in individual problems between you, your dealer, or American Honda Motor Co., Inc.

To contact NHTSA, you may call the Vehicle Safety Hotline toll-free at 1-888-327-4236
(TTY: 1-800-424-9153); go to *http://www.safercar.gov*; or write to: Administrator, NHTSA, 1200 New Jersey Avenue, SE., Washington, DC 20590.
You can also obtain other information about motor vehicle safety from *http://www.safercar.gov*.

Purchasing Factory Authorized Manuals (U.S. only)

The publications shown below can be purchased from Helm Incorporated. You can order by phone or online:

- Call Helm Inc. at 1-800-782-4356 (credit card orders only)
- Go online at *www. helminc. com*

If you are interested in other years or models, contact Helm Inc. at 1-800-782-4356.

Publication Form Number	Form Description
61TA003	2010 Honda Accord 2/4 door L4 Service Manual Base Book
61TA004	2010 Honda Accord 2/4 door V6 Service Manual Supplement
61TA003EL	2010 Honda 2/4 Door L4/V6 Electrical Troubleshooting Manual
61TA030	2008 Honda 2/4 door Body Repair Manual
31TE0620	2010 Honda Accord 2-door Owner's Manual
31TA5820	2010 Honda Accord Navigation System Owner's Manual
31TA5M20	2010 Honda Accord Honda Service History
31TE0Q20	2010 Honda Accord 2-door Technology Reference Guide
HON-R	Order Form for Previous Years- Indicate Year and Model Desired

Service Manual:
Covers maintenance and recommended procedures for repair to engine and chassis components. It is written for the journeyman mechanic, but it is simple enough for most mechanically inclined owners to understand.

Electrical Troubleshooting Manual:
Complements the Service Manual by providing in-depth troubleshooting information for each electrical circuit in your vehicle.

Body Repair Manual:
Describes the procedures involved in the replacement of damaged body parts.

A

Accessories 253
ACCESSORY
(Ignition Key Position) 79
Accessory Power Sockets 114
Active Head Restraints 98
Additives, Engine Oil 301
Advanced Airbags 25
Airbag (SRS) 9, 21
Airbag System Components 21
Air Conditioning System 122, 127
Usage 125, 128
Air Pressure, Tires 329, 330
Antifreeze 304
Anti-lock Brakes (ABS)
Indicator 58, 274
Operation 274
Anti-theft, Audio System 200
Anti-theft Steering Column Lock .. 79
Audio System 135
Auto Door Locking/Unlocking 81
Automatic Lighting Off Feature 72
Automatic Seat Belt Tensioners 19
Automatic Speed Control 210
Automatic Transmission 267
Capacity, Fluid 370, 372
Shifting 267
Shift Lever Position
Indicators 267
Shift Lever Positions 268
Shift Lock Release 270
Auxiliary Input Jack 199

B

Battery
Charging System
Indicator 56, 355
Jump Starting 350
Maintenance 337
Specifications 371, 373
Before Driving 241
Belts, Seat 8, 17
Beverage Holders 112
Bluetooth® HandsFreeLink® 217
Booster Seats 48
Brakes
Anti-lock System (ABS) 274
Break-in, New Linings 242
Bulb Replacement 320
Fluid 312
Parking 110
System Indicator 57, 357
Wear Indicators 273
Braking System 273
Break-in, New Vehicle 242
Brightness Control, Instruments ... 73
Bulb Replacement
Back-up Lights 320
Brake Lights 320
Fog Lights 322
Front Parking Lights 318
Headlights 315
High-mount Brake Light 321
Rear Lights 320
Specifications 371, 373
Turn Signal Lights 318, 320
Bulbs, Halogen 315, 322

C

Capacities Chart 370, 372
Carbon Monoxide Hazard 51
Carrying Cargo 255

CONTINUED

Index

CAUTION, Explanation of iii
CD Care 193
CD Changer 150, 181
Certification Label 368
Chains 335
Changing a Flat Tire 343
Changing Oil
  How to 302
  When to 291
Charging System Indicator 56, 355
Check Fuel Cap Message 245
Checklist, Before Driving 262
Child Safety 33
  Booster Seats 48
  Child Seats 40, 41
  Important Safety
    Reminders 33-50
  Infants 38
  Larger Children 47
  LATCH 42
  Risks with Airbags 34
  Small Children 39
  Tether 46
  Warning Labels 52
  Where Should a Child Sit 34
Child Seats 33
  LATCH 42
  Tether Anchorage Points 46
Cleaning the Seat Belts 324
Climate Control System 127
  On/Off Button 129
Clock 201
Clutch Fluid 313
CO in the Exhaust 51, 380
Cold Weather, Starting in 263
Compact Spare 342
Compass 206
Console Compartment 113
Consumer Information 386
Controls, Instruments and 53
Coolant
  Adding 304
  Checking 249
  Proper Solution 304
  Temperature Gauge 65
Crankcase Emissions Control
  System 380
Cruise Control Indicator 62
Cruise Control Operation 210
Customer Service 386

D

DANGER, Explanation of iii
Dashboard 3, 54
Daytime Running Lights 60, 72
Daytime Running Lights
  Indicator 60
Dead Battery 350
Defects, Reporting Safety* 388
Defogger, Rear Window 75
Defrosting the Windows 126, 131
Dimensions 370, 372
Dimming the Headlights 70
Dipstick
  Automatic Transmission 307
  Engine Oil 248
Directional Signals 70
Disc Brake Wear Indicators 273
Disposal of Used Oil 303
Doors
  Auto Door Lock 81
  Auto Door Unlock 84
  Locking and Unlocking 80
DOT Tire Quality Grading 374
Downshifting, Manual
  Transmission 264

Driver and Passenger Safety..... 5
Driving 261
Economy 250
Dual Temperature Control..... 132
Dust and Pollen Filter 325

E

Economy, Fuel 250
Emergencies..... 341
Battery, Jump Starting 350
Brake System Indicator 357
Changing a Flat Tire 343
Charging System Indicator 355
Hazard Warning Flashers 74
Jump Starting 350
Checking the Fuses..... 358
Low Oil Pressure Indicator 355
Malfunction Indicator Lamp 356
Overheated Engine 353
Towing 365
Emergency Brake..... 110
Emergency Flashers 74
Emergency Towing 365
Emergency Trunk Opener 91
Emissions Controls..... 380
Emissions Testing 383
Engine
Adding Engine Coolant..... 304
Coolant Temperature Gauge 65
If It Won't Start 348
Malfunction Indicator Lamp 356
Oil Life Indicator..... 291
Oil Pressure Indicator 355
Oil, What Kind to Use 300
Overheating..... 353
Specifications 370, 372
Speed Limiter..... 266, 270
Starting..... 263
V6..... 372
4-cylinder 370
Engine Speed Limiter 266, 270
Ethanol in Gasoline 242
Evaporative Emissions Controls.. 380
Exhaust Fumes 51
Expectant Mothers, Use of Seat Belts by 15

F

Fan, Interior 123, 130
Features 121
Filling the Fuel Tank..... 243
Filters
Dust and Pollen 325
Oil 302
Flashers, Hazard Warning..... 74
Flat Tire, Changing a 343
Fluids
Automatic Transmission..... 307
Brake 312
Clutch 313
Manual Transmission 309
Power Steering..... 313
Windshield Washer 306
Fog Lights..... 73
Folding Rear Seat 99
Four-way Flashers 74
Front Airbags 9, 23

CONTINUED

Index

Fuel 242
Check Fuel Cap Message 245
Fill Door and Cap 243
Gauge 65
Low Fuel Indicator 60
Octane Requirement 242
Oxygenated 242
Tank, Refueling 243
Fuel Economy 250
Fuel Economy (ECO) Indicator 59
Fuses, Checking the 358

G

Gas Mileage, Improving 250, 251
Gasoline 242
Gauge 65
Low Fuel Indicator 60
Octane Requirement 242
Tank, Refueling 243
Gas Station Procedures 243
Gauges
Engine Coolant Temperature 65
Fuel 65
Gearshift Lever Positions
Automatic Transmission 267
Manual Transmission 264
Glove Box 112
Gross Vehicle Weight Rating (GVWR) 257, 282

H

Halogen Headlight Bulbs 315
HandsFreeLink® 217
Hazard Warning Flashers 74
Headlights 70
Aiming 315
Automatic Lighting Off 72
Automatic Lighting On 71
Daytime Running Lights 72
High Beam Indicator 60
Reminder Chime 70
Replacing Halogen Bulbs 315, 322
Turning on 70
Head Restraints 13, 96
Heating and Cooling 122
Heated Mirrors 103
Heater, Seat 101
HomeLink® Universal Transceiver 213
Hood, Opening and Closing 246
Horn 4, 68
Hydraulic Clutch 313

I

Identification Number, Vehicle 368
Ignition
Keys 77
Switch 79
Timing Control System 381
Immobilizer System 78
Important Safety Precautions 6

Indicators 56
ABS (Anti-lock Brake) 58
Brake (Parking and Brake System) 57, 357
Charging System 56, 355
Cruise Control 62
Cruise Main 62
Door and Trunk Open 61
DRL (Daytime Running Lights) 60
Fog Lights 62
Fuel Economy (ECO) Indicator 59
High Beam 60
Key (Immobilizer System) 58
Lights On 60
Low Fuel 60
Low Oil Pressure 56, 355
Low Tire Pressure 59
Maintenance Minder 61
Malfunction Indicator Lamp 356
Security System 61
Side Airbag Off 57
Seat Belt 56
SRS 57
TPMS 59
Turn Signal and Hazard Warning 58
VSA Activation 62
VSA System 62
Washer Level 60
Indicators, Instrument Panel 56
Infant Restraint 38
Infant Seats 38
Tether Anchorage Points 46
Inflation, Proper Tire 329
Information Display 64
Inside Mirror 102
Inspection, Tire 331
Installing a Child Seat 41
Tether Anchorage Points 46
Using LATCH 42
Instrument Panel 55
Instrument Panel Brightness 73
Instruments and Controls 53
Interior Lights 117
Introduction i

J

Jacking up the Vehicle 344
Jack, Tire 344
Jump Starting 350

K

Keys 77

L

Label, Certification 368
Lane Change, Signaling 70
Lap/Shoulder Belts 14, 18
LATCH System 42
Lights
Bulb Replacement 315
Indicator 55
Parking 70
Turn Signal 58, 70
Load Limits 256
LOCK (Ignition Key Position) 79

CONTINUED

Index

Locks
- Anti-theft Steering Column 79
- Fuel Fill Door 243
- Glove Box 112
- Lockout Prevention 81
- Power Door 80
- Trunk 90

Low Coolant Level 249
Low Fuel Indicator 60
Lower Gear, Downshifting to a.... 264
Low Oil Pressure Indicator 56, 355
Lower Anchors 42
Lubricant Specifications
- Chart 370, 372

Luggage, Storing (Cargo) 255

M

Maintenance 289
- Minder 291
- Main Items and Sub Items 294, 297
- Owner's Maintenance Checks 296
- Minder Indicator 61
- Safety 290

Malfunction Indicator Lamp 356
Manual Transmission 264
Manual Transmission Fluid 309
Meters, Gauges 55, 63
Methanol in Gasoline 242
Mirrors, Adjusting 102
Modifying Your Vehicle 254
Moonroof 108

N

Neutral Gear Position 268
New Vehicle Break-in 242
Normal Shift Speeds 265
NOTICE, Explanation of i
Numbers, Identification 368

O

Octane Requirement, Gasoline 242
Odometer 64
Oil
- Change, How to 302
- Change, When to 291
- Checking Engine 248
- Pressure Indicator 56, 355
- Selecting Proper Viscosity Chart 301

ON (Ignition Key Position) 79
Onboard Refueling Vapor Recovery 380
Outside Mirrors 102
Outside Temperature Indicator 66
Overheating, Engine 353
Owner's Maintenance Checks 296
Oxygenated Fuels 242

P

Panel Brightness Control 73
Park Gear Position 268
Parking 272
Parking Brake 110
Parking Brake and Brake System Indicator 57, 357
Parking Lights 70
Parking Over Things that Burn ... 382
Passenger Airbag Off Indicator 30
PGM-FI System 381
Pollen Filter 325
Power Door Locks 80
Power Seat Adjustments 92

Power Socket Locations 111, 114
Power Windows 104
Pregnancy, Using Seat Belts 15
Protecting Adults and Teens..... 11
  Additional Safety Precautions.... 16
  Advice for Pregnant Women..... 15
Protecting Children 33
  General Guidelines 33
  Protecting Infants 38
  Protecting Larger Children 47
  Protecting Small Children 39
  Using Child Seats with Tethers..... 46
  Using LATCH 42

R

Radiator Overheating..... 353
Radio/CD Sound System..... 135
Radio Theft Protection..... 200
Radio, XM® 144, 174
Readiness Codes..... 383
Rear Lights, Bulb Replacement... 320
Rear Seat Access 94
Rear Seat, Folding 99
Rearview Mirror 102
Rear Window Defogger 75
Reclining the Seat Backs 92, 93
Recommended Shift Speeds 265
Refueling..... 243
Reminder Indicators..... 56
Remote Transmitter 87
Replacement Information
  Engine Oil and Filter 302
  Fuses 358
  Light Bulbs 315
  Schedule 291
  Timing Belt..... 314
  Tires 334
  Wiper Blades 326
Replacing Seat Belts After a Crash 20
Reporting Safety Defects* 388
Reserve Tank, Engine Coolant..... 249, 304
Restraint, Child 33
Reverse Gear Position..... 268
Reverse Lockout 266
Rotation, Tire 333

S

Safety Belts..... 8, 17
Safety Defects, Reporting* 388
Safety Features 7
  Airbags..... 9
  Seat Belts 8
Safety Labels, Location of 52
Safety Messages iii
Seat Belts 8, 18
  Additional Information..... 17
  Automatic Seat Belt Tensioners..... 19
  Cleaning 324
  Lap/Shoulder Belt..... 14, 18
  Maintenance..... 19
  Reminder Indicator and Beeper..... 17, 56
  System Components..... 17
  Use During Pregnancy..... 15
  Wearing a Lap/Shoulder Belt.... 18

CONTINUED

Index

Seats
Adjusting 92-94
Folding 99
Heaters 101
Security System 204
Select/Reset Knob 63
Selecting a Child Seat 40
Selector Knob (Disc Changer) 136
Serial Number 368
Service Minder 291
Service Manual* 389
Service Station Procedures 243
Setting the Clock 201
Shift Lever Position Indicators 267
Shift Lock Release 270
Side Airbags 9, 27
How Your Side Airbags Work.... 27
How the Side Airbag Off Indicator Works 30
Side Curtain Airbags 9, 28
How Your Side Curtain Airbags Work 28
Signaling Turns 70
Snow Tires 335
Sound System 135
Spare Tire
Inflating 342
Specifications 371, 373
Spark Plugs 370, 372
Specifications 370, 372
Speed Control 210
Speed Limiter 266, 270
Speedometer 63
SRS, Additional Information 21
Additional Safety Precautions 32
Airbag Service 31
Airbag System Components 21
How the Passenger Airbag Off Indicator Works 30
How the Side Airbag Off Indicator Works 30
How the SRS Indicator Works ... 29
How Your Front Airbags Work 23
How Your Side Airbags Work.... 27
How Your Side Curtain Airbags Work 28
SRS Indicator 29, 57
START (Ignition Key Position) 79
Starting the Engine 263
In Cold Weather at High Altitude 263
With a Dead Battery 350
Steam Coming from Engine 353
Steering Wheel
Adjustments 76
Anti-theft Column Lock 79
Steering Wheel Buttons 198, 210
Stereo Sound System 135
Sun Visor 115
Sunglasses Holder 115
Supplemental Restraint System 9, 21
Servicing 31
SRS Indicator 29, 57
System Components 21
Synthetic Oil 301

T

Taking Care of the Unexpected .. 341

Technical Descriptions
DOT Tire Quality Grading 374
Emissions Control Systems..... 380
Three Way Catalytic Converter..... 382
Temperature Gauge 65
Temperature, Outside..... 66
Tether Anchorage Points 46
Theft Protection, Radio..... 200
Three Way Catalytic Converter... 382
Time, Setting the 201
Timing Belt..... 314
Tire Chains 335
Tire, How to Change a Flat 343
Tire Information 376
Tire Labeling..... 376
Tire Pressure Monitoring System (TPMS) 278, 378
Low Tire Pressure Indicator..... 59, 278
Required Federal Explanation..... 378
TPMS Indicator 59, 279
Tires 329
Air Pressure 330
Chains 335
Checking Wear 331
Compact Spare 342
DOT Tire Quality Grading 374
Glossary of Tire Terminology.. 377
Inflation 329
Inspection 331
Replacing 334
Rotating..... 333
Service Life..... 332
Snow 335
Specifications 371, 373
Tools, Tire Changing 343
Towing
A Trailer..... 281
Emergency Wrecker 365
Weight Limit 281
Transmission
Checking Fluid Level, Automatic 307
Checking Fluid Level, Manual 309, 310
Fluid Selection 308, 309, 311
Identification Number..... 369
Shifting the Automatic..... 267
Shifting the Manual..... 264
Treadwear 331
Trip Meter 65
Trunk..... 90
Emergency Opener 91
Opening the 90
Open Indicator 61
Turn Signals 70

U

Unexpected, Taking Care of the..... 341
Uniform Tire Quality Grading 374
Unleaded Gasoline..... 242
Used Oil, How to Dispose of 303

V

Vanity Mirror 115
Vehicle Capacity Load 256
Vehicle Dimensions 370, 372
Vehicle Identification Number..... 368

CONTINUED

Index

Vehicle Stability Assist (VSA®) System 276
VSA Activation Indicator 62, 276
VSA Off Switch 277
VSA System Indicator 62, 276
Vehicle Storage 338
Ventilation 124, 130
VIN 368
Viscosity, Oil 301
Voice Control System 128, 161

W

WARNING, Explanation of iii
Warning Labels, Location of 52
Warranty Coverages 387
Washers, Windshield
Checking the Fluid Level 306
Indicator 60
Operation 69
Wheels
Adjusting the Steering 76
Alignment and Balance 332
Compact Spare 342
Wrench, Nut 344
Windows
Auto Reverse 105
Operating the Power 104
Rear, Defogger 75
Windshield
Cleaning 69
Defroster 126, 131
Washers 69
Wipers, Windshield
Changing Blades 326
Operation 69
Worn Tires 331
Wrecker, Emergency Towing 365

X

XM® Radio 144, 174

* : U.S. only

Service Information Summary

Gasoline:
Unleaded gasoline, pump octane number of 87 or higher.

Fuel Tank Capacity:
18.5 US gal (70.0 ℓ)

Recommended Engine Oil:
API Premium grade 5W-20 detergent oil (see page 300).

Oil change capacity (including filter):
4-cylinder models
4.2 US qt (4.0 ℓ)
V6 models
4.5 US qt (4.3 ℓ)

Automatic Transmission Fluid:
Honda Genuine ATF-Z1 (automatic transmission fluid) (see page 308).

Manual Transmission Fluid:
Honda Manual Transmission Fluid preferred, or an SAE 10W-30 or 10W-40 motor oil as a temporary replacement (see page 309).
5-speed manual transmission:
2.0 US qt (1.9 ℓ)

6-speed manual transmission:
2.2 US qt (2.1 ℓ)

Power Steering Fluid:
Honda Power Steering Fluid preferred, or another brand of power steering fluid as a temporary replacement. Do not use ATF (see page 314).

Brake Fluid:
Honda Heavy Duty Brake Fluid DOT 3 preferred, or a DOT 3 or DOT 4 brake fluid as a temporary replacement (see page 312).

Tire Pressure (measured cold):
4-cylinder models
Front/Rear:
32 psi (220 kPa , 2.2 kgf/cm^2)

V6 models
Front/Rear:
32 psi (220 kPa , 2.2 kgf/cm^2)

Spare Tire Pressure:
60 psi (420 kPa , 4.2 kgf/cm^2)

Owner's Identification

OWNER _____

_____

ADDRESS _____
STREET

_____ _____ _____
CITY STATE/PROVINCE/TERRITORY ZIP CODE/ POSTAL CODE

V. I. N. _____

DELIVERY DATE _____
(Date sold to original retail purchaser)

DEALER NAME _____ DEALER NO. _____

ADDRESS _____
STREET

_____ _____ _____
CITY STATE/PROVINCE/TERRITORY ZIP CODE/ POSTAL CODE

OWNER'S SIGNATURE _____

DEALER'S SIGNATURE _____

This owner's manual should be considered a permanent part of the vehicle and should remain with the vehicle when it is sold.

This owner's manual covers all models of the Accord Coupe. You may find descriptions of equipment and features that are not on your particular model.

The information and specifications included in this publication were in effect at the time of approval for printing. Honda Motor Co., Ltd. reserves the right, however, to discontinue or change specifications or design at any time without notice and without incurring any obligation whatsoever.

POUR CLIENTS CANADIEN
AVIS IMPORTANT: Si vous avez besoin d'un Manuel du Conducteur en français, veuillez demander à votre concessionnaire de commander le numéro de pièce 33TE0C20