HYUNDAI



# OWNER'S MANUAL

Operation
Maintenance
Specifications

All information in this Owner's Manual is current at the time of publication. However, Hyundai reserves the right to make changes at any time so that our policy of continual product improvement may be carried out.

This manual applies to all Hyundai models and includes descriptions and explanations of optional as well as standard equipment. As a result, you may find material in this manual that does not apply to your specific vehicle.

## CAUTION: MODIFICATIONS TO YOUR HYUNDAI

Your Hyundai should not be modified in any way. Such modifications may adversely affect the performance, safety or durability of your Hyundai and may, in addition, violate conditions of the limited warranties covering the vehicle. Certain modifications may also be in violation of regulations established by the U.S. Department of Transportation and other federal or state agencies.

## TWO-WAY RADIO OR CELLULAR TELEPHONE INSTALLATION

Your vehicle is equipped with electronic fuel injection and other electronic components. It is possible for an improperly installed/adjusted two-way radio or cellular telephone to adversely affect electronic systems. For this reason, we recommend that you carefully follow the radio manufacturer's instructions or consult your Hyundai dealer for precautionary measures or special instructions if you choose to install one of these devices.

## SAFETY AND VEHICLE DAMAGE WARNING

This manual includes information titled as WARNING, CAUTION and NOTICE.
These titles indicate the following:

**⚠ WARNING**
**This indicates that a situation may result in harm, serious injury or death to you or other persons if the warning is not heeded. Follow the advice provided with the warning.**

**⚠ CAUTION**
***This indicates that a situation may result in damage to your vehicle or its equipment if the caution is not heeded. Follow the advice provided with the caution.***

**✻ NOTICE**
**This indicates that interesting or helpful information is being provided.**

# FOREWORD

Thank you for choosing Hyundai. We are pleased to welcome you to the growing number of discriminating people who drive Hyundais. The advanced engineering and high-quality construction of each Hyundai we build is something of which we're very proud.

Your Owner's Manual will introduce you to the features and operation of your new Hyundai. It is suggested that you read it carefully because the information it contains can contribute greatly to the satisfaction you receive from your new car.

The manufacturer also recommends that all service and maintenance on your car be performed by an authorized Hyundai dealer. Hyundai dealers are prepared to provide high-quality service, maintenance and any other assistance that may be required.

## HYUNDAI MOTOR AMERICA

**Note** : Because future owners will also need the information included in this manual, if you sell this Hyundai, please leave the manual in the vehicle for their use. Thank you.

⚠ **CAUTION**

***Severe engine and transmission damage may result from the use of poor quality fuels and lubricants that do not meet Hyundai specifications. You must always use high quality fuels and lubricants that meet the specifications listed on Page 8-4 in the Vehicle Specifications and consumer information section of the Owner's Manual.***

Copyright 2011 Hyundai Motor America. All rights reserved. No part of this publication may be reproduced, stored in any retrieval system or transmitted in any form or by any means without the prior written permission of Hyundai Motor America.

## Guide to Hyundai Genuine Parts

**1. What are Hyundai Genuine Parts?**

Hyundai Genuine Parts are the same parts used by Hyundai Motor Company to manufacture vehicles. They are designed and tested for the optimum safety, performance, and reliability to our customers.

**2. Why should you use genuine parts?**

Hyundai Genuine Parts are engineered and built to meet rigid manufacturing requirements. Using imitation, counterfeit or used salvage parts is not covered under the Hyundai New Vehicle Limited Warranty or any other Hyundai warranty.

In addition, any damage to or failure of Hyundai Genuine Parts caused by the installation or failure of an imitation, counterfeit or used salvage part is not covered by any Hyundai Warranty.

**3. How can you tell if you are purchasing Hyundai Genuine Parts?**

Look for the Hyundai Genuine Parts Logo on the package (see below).

Hyundai Genuine Parts exported to are packaged with labels written only in English.

Hyundai Genuine Parts are only sold through authorized Hyundai Dealerships.

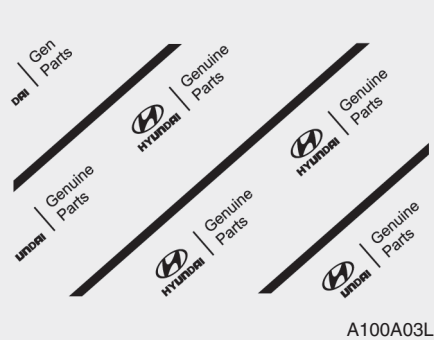

A100A03L

A100A01L

A100A02L

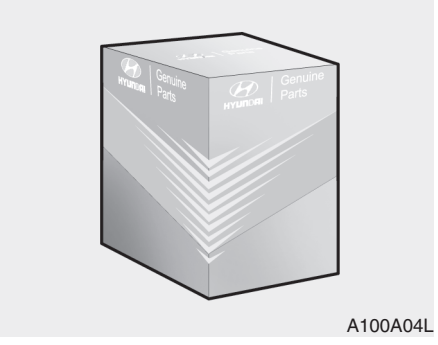

A100A04L

# TABLE OF CONTENTS


| | |
|---|---|
| Introduction | 1 |
| Your vehicle at a glance | 2 |
| Safety features of your vehicle | 3 |
| Features of your vehicle | 4 |
| Driving your vehicle | 5 |
| What to do in an emergency | 6 |
| Maintenance | 7 |
| Specifications, Consumer information, Reporting safety defects | 8 |
| Index | I |

# Introduction

# 1

How to use this manual / 1-2
Fuel requirements / 1-3
Vehicle break-in process / 1-5
Vehicle data collection and event data recorders / 1-6
Indicator symbols on the instrument cluster / 1-7

## HOW TO USE THIS MANUAL

A010000AHM

We want to help you get the greatest possible driving pleasure from your vehicle. Your Owner's Manual can assist you in many ways. We strongly recommend that you read the entire manual. In order to minimize the chance of death or injury, you must read the WARNING and CAUTION sections in the manual.

Illustrations complement the words in this manual to best explain how to enjoy your vehicle. By reading your manual, you will learn about features, important safety information, and driving tips under various road conditions.

The general layout of the manual is provided in the Table of Contents. A good place to start is the index; it has an alphabetical listing of all information in your manual.

Sections: This manual has eight sections plus an index. Each section begins with a brief list of contents so you can tell at a glance if that section has the information you want.

You will find various WARNINGS, CAUTIONS, and NOTICES in this manual. These WARNINGS were prepared to enhance your personal safety. You should carefully read and follow ALL procedures and recommendations provided in these WARNINGS, CAUTIONS and NOTICES.

**⚠ WARNING**

**A WARNING indicates a situation in which harm, serious bodily injury or death could result if the warning is ignored.**

**⚠ CAUTION**

***A CAUTION indicates a situation in which damage to your vehicle could result if the caution is ignored.***

**✻ NOTICE**

**A NOTICE indicates interesting or helpful information is being provided.**

## FUEL REQUIREMENTS

A020101ABH-EU

Your new vehicle is designed to obtain maximum performance with UNLEADED FUEL, as well as minimize exhaust emissions and spark plug fouling.

### 3.8 engine

Your new vehicle is designed to use only unleaded fuel having an octane number ((R+M)/2) of 87 (Research Octane Number 91) or higher.

### 4.6/5.0 engine

Your new vehicle is designed to use only unleaded fuel having an octane number ((R+M)/2) of 87 or higher.

For improved vehicle performance, premium unleaded fuel with a Pump Octane Rating of 91 (Research Octane Number 95) or higher is recommended.

**⚠ CAUTION**

***Never add any fuel system cleaning agents to the fuel tank other than what has been specified. (Consult an authorized HYUNDAI dealer for details.)***

**⚠ WARNING**

- **Do not "top off" after the nozzle automatically shuts off when refueling.**
- **Tighten the cap until it clicks one time, otherwise the Malfunction Indicator Light "⚙" will illuminate.**
- **Always check that the fuel cap is installed securely to prevent fuel spillage in the event of an accident.**

A020103AUN-EU

***Gasoline containing alcohol and methanol***

Gasohol, a mixture of gasoline and ethanol (also known as grain alcohol), and gasoline or gasohol containing methanol (also known as wood alcohol) are being marketed along with or instead of leaded or unleaded gasoline.

Do not use gasohol containing more than 10% ethanol, and do not use gasoline or gasohol containing any methanol. Either of these fuels may cause drivability problems, check malfunction indicator light or damage and damage to the fuel system.

Discontinue using gasohol of any kind if drivability problems occur.

Vehicle damage or drivability problems may not be covered by the manufacturer's warranty if they result from the use of:

1. Gasohol containing more than 10% ethanol.
2. Gasoline or gasohol containing methanol.
3. Leaded fuel or leaded gasohol.

"E85" fuel is an alternative fuel comprised of 85 percent ethanol and 15 percent gasoline, and is manufactured exclusively for use in Flexible Fuel Vehicles. “E85” is not compatible with your vehicle. Use of “E85” may result in poor engine performance and damage to your vehicle's engine and fuel system. HYUNDAI recommends that customers do not use fuel with an ethanol content exceeding 10 percent.

**⚠ CAUTION**

***Your New Vehicle Limited Warranty does not cover damage to the fuel system or any performance problems caused by the use of “E85” fuel.***

**⚠ CAUTION**

***Never use gasohol which contains methanol. Discontinue use of any gasohol product which impairs drivability.***

A020105AUN

### *Do not use methanol*

Fuels containing methanol (wood alcohol) should not be used in your vehicle. This type of fuel can reduce vehicle performance and damage components of the fuel system.

**⚠ CAUTION**

***Your New Vehicle Limited Warranty may not cover damage to the fuel system and any performance problems that are caused by the use of fuels containing methanol.***

### *Fuel Additives*

HYUNDAI recommends that you use good quality gasolines treated with detergent additives such as TOP TIER Detergent Gasoline, which help prevent deposit formation in the engine. These gasolines will help the engine run cleaner and enhance performance of the Emission Control System. For more information on TOP TIER Detergent Gasoline, please go to the website (www.toptiergas.com)

For customers who do not use TOP Tier Detergent Gasoline regularly, and have problems starting or the engine does not run smoothly, additives that you can buy separately may be added to the gasoline.

If TOP TIER Detergent Gasoline is not available, one bottle of HYUNDAI Fuel System Cleaner Plus added to the fuel tank at every 7,500 miles or 12 months is recommended. They are available from your authorized HYUNDAI dealer along with information on how to use them. Do not mix other additives.

A020107AUN

### *Operation in foreign countries*

If you are going to drive your vehicle in another country, be sure to:

- Observe all regulations regarding registration and insurance.
- Determine that acceptable fuel is available.

## VEHICLE BREAK-IN PROCESS

A030000BUN

No special break-in period is needed. By following a few simple precautions for the first 600 miles (1,000 km) you may add to the performance, economy and life of your vehicle.

- Do not race the engine.
- While driving, keep your engine speed (rpm, or revolutions per minute) between 2,000 rpm and 4,000 rpm.
- Do not maintain a single speed for long periods of time, either fast or slow. Varying engine speed is needed to properly break-in the engine.
- Avoid hard stops, except in emergencies, to allow the brakes to seat properly.
- Don't let the engine idle longer than 3 minutes at one time.
- Don't tow a trailer during the first 1,200 miles (2,000 km) of operation.

### ⚠ CALIFORNIA PROPOSITION 65 WARNING

**Items contained in motor vehicles or emitted from them are known to the State of California to cause cancer and birth defects or reproductive harm. These include:**

- **Gasoline and its vapors**
- **Engine exhaust**
- **Used engine oil**
- **Interior passenger compartment components and materials**
- **Component parts which are subject to heat and wear**

**In addition, battery posts, terminals and related accessories contain lead, lead compounds and other chemicals known to the State of California to cause cancer and reproductive harm.**

## VEHICLE DATA COLLECTION AND EVENT DATA RECORDERS

A040000AFD

**This vehicle is equipped with an event data recorder (EDR). The main purpose of an EDR is to record, in certain crash or near crash-like situations, such as an air bag deployment or hitting a road obstacle, data that will assist in understanding how a vehicle's systems performed. The EDR is designed to record data related to vehicle dynamics and safety systems for a short period of time, typically 30 seconds or less. The EDR in this vehicle is designed to record such data as:**

- **How various systems in your vehicle were operating;**
- **Whether or not the driver and passenger safety belts were buckled/fastened;**
- **How far (if at all) the driver was depressing the accelerator and/or brake pedal; and,**
- **How fast the vehicle was traveling.**

**These data can help provide a better understanding of the circumstances in which crashes and injuries occur. NOTE: EDR data are recorded by your vehicle only if a nontrivial crash situation occurs; no data are recorded by the EDR under normal driving conditions and no personal data (e.g., name, gender, age, and crash location) are recorded. However, other parties, such as law enforcement, could combine the EDR data with the type of personally identifying data routinely acquired during a crash investigation.**

**To read data recorded by an EDR, special equipment is required, and access to the vehicle or the EDR is needed.**

**In addition to the vehicle manufacturer, other parties, such as law enforcement, that have the special equipment, can read the information if they have access to the vehicle or the EDR.**

## INDICATOR SYMBOLS ON THE INSTRUMENT CLUSTER

A050000ABH-EU

- Door ajar warning light
- Seat belt warning light
- High beam indicator
- Turn signal indicator
- ESC indicator
- ESC OFF indicator
- ABS warning light
- Parking brake & Brake fluid warning light
- Engine oil pressure warning light
- Low windshield washer fluid level warning light (if equipped)
- Charging system warning light
- Malfunction indicator light
- Air bag warning light
- Cruise indicator (if equipped)
- Cruise SET indicator (if equipped)
- SCC malfunction indicator (if equipped)
- SCC sensor malfunction indicator (if equipped)
- Immobilizer indicator
- Low fuel level warning light
- LDWS indicator (if equipped)
- LDWS malfunction indicator (if equipped)
- Front fog light indicator (if equipped)
- Trunk ajar warning light
- EPB malfunction indicator (if equipped)
- AUTO HOLD indicator (if equipped)
- AFLS malfunction indicator (if equipped)
- ECO indicator (if equipped)
- Tail light indicator
- TPMS (Tire Pressure Monitoring System) malfunction indicator
- Low tire pressure telltale
- Low tire pressure position telltale (if equipped)

* For more detailed explanations, refer to “Instrument cluster” in section 4.

# Your vehicle at a glance

# 2

**Interior overview / 2-2**
**Instrument panel overview / 2-3**
**Engine compartment / 2-4**

## INTERIOR OVERVIEW

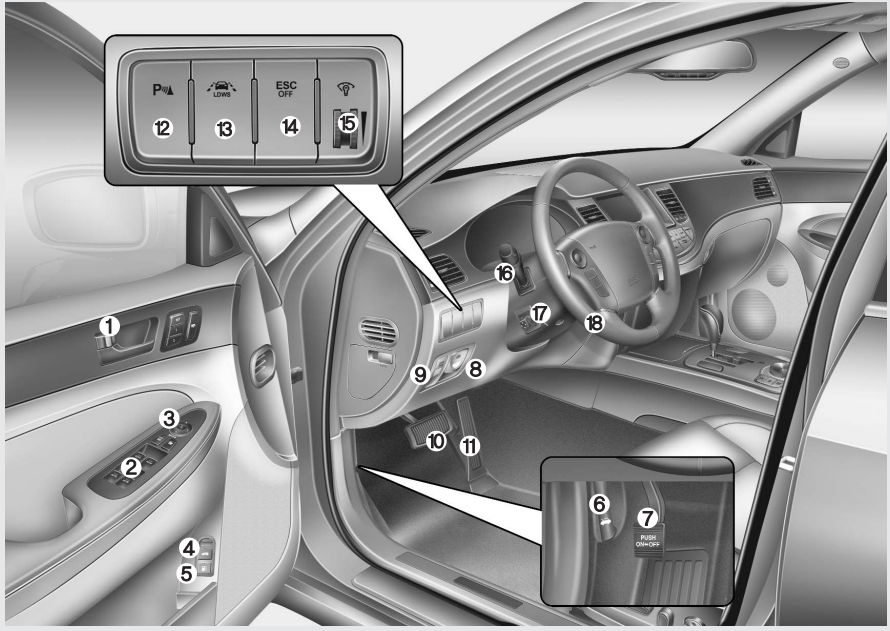


1. Door lock/unlock button .....4-17
2. Power window switches .....4-23
3. Outside rearview mirror control switch .....4-46
4. Trunk lid release switch.....4-20
5. Fuel filler lid release button.....4-28
6. Hood release lever.....4-27
7. Foot parking brake* .....5-19
8. Electric parking brake*.....5-21
9. Auto hold control button* .....5-25
10. Brake pedal.....5-18
11. Accelerator pedal .....5-6, 5-9
12. Parking assist button* .....4-72
13. Lane departure warning system switch*.....5-51
14. ESC OFF button .....5-30
15. Instrument panel illumination control knob .....4-48
16. Light control/Turn signals.....4-77
17. Steering wheel manual tilt or Power tilt/ telescope control* .....4-37
18. Steering wheel.....4-37

* : if equipped

* The actual vehicle may differ from the illustration.

OBH012001E

B010000ABH-EU

## INSTRUMENT PANEL OVERVIEW

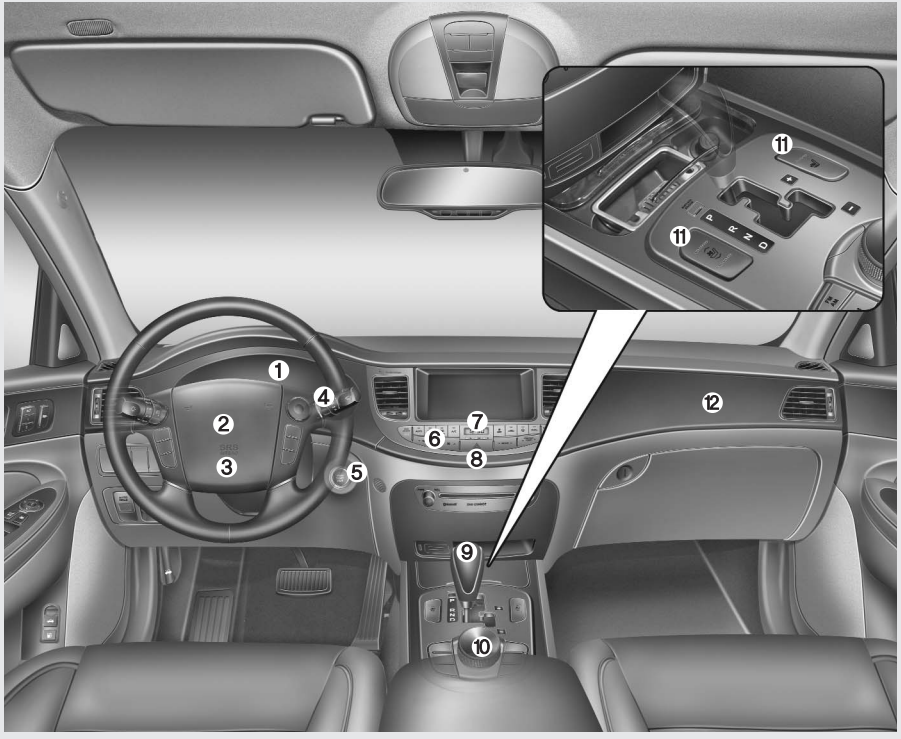


1. Instrument cluster.....4-48
2. Horn .....4-38
3. Driver's front air bag.....3-46
4. Wiper/Washer.....4-82
5. Ignition switch or Engine start/stop button*.....5-5, 5-7
6. Climate control system.....4-89
7. Digital clock .....4-109
8. Hazard warning flasher switch..4-76, 6-2
9. Shift lever .....5-11
10. Central control panel*.....4-114
11. Seat warmer or Climate control seat* .....3-8, 3-9
12. Passenger's front air bag .....3-46

* : if equipped

OBH019002N

B020000ABH-EU

## ENGINE COMPARTMENT

■ 3.8 Engine

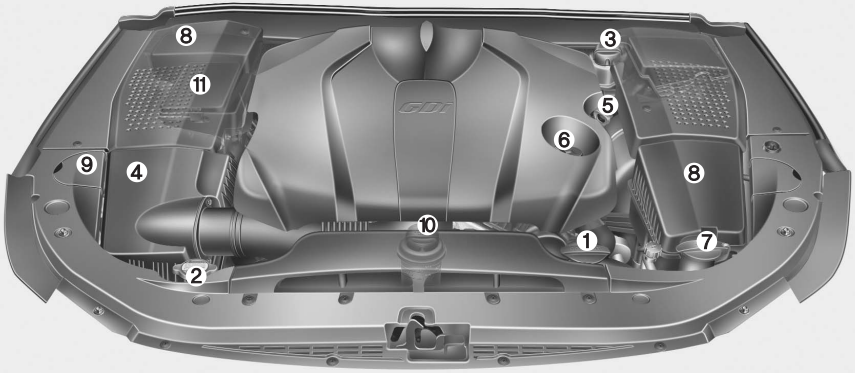


1. Engine coolant reservoir .....7-18
2. Radiator cap .....7-19
3. Brake fluid reservoir .....7-21
4. Air cleaner.....7-24
5. Engine oil dipstick .....7-16
6. Engine oil filler cap .....7-16
7. Windshield washer fluid reservoir .....7-23
8. Fuse box .....7-49
9. Power steering fluid reservoir (with EHPS) .....7-22
10. Power steering fluid reservoir (without EHPS) .....7-22
11. Jumper terminal .....6-4

* The actual engine compartment in the vehicle may differ from the illustration.

OBH012101L

B030000ABH

## ■ 4.6 Engine

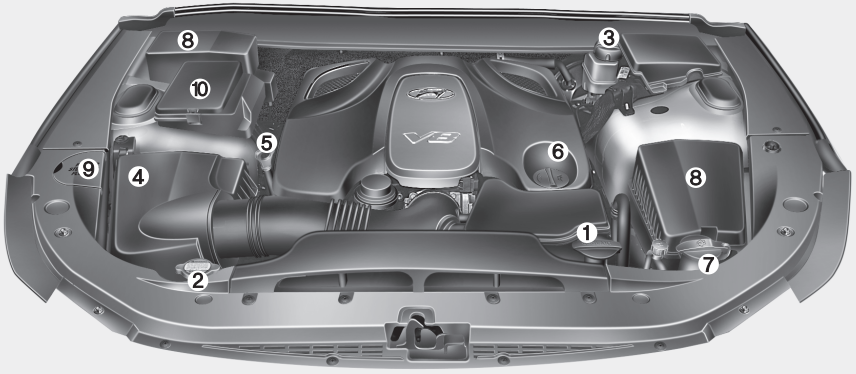


1. Engine coolant reservoir .....7-18
2. Radiator cap .....7-19
3. Brake fluid reservoir .....7-21
4. Air cleaner .....7-24
5. Engine oil dipstick .....7-16
6. Engine oil filler cap .....7-16
7. Windshield washer fluid reservoir .....7-23
8. Fuse box .....7-49
9. Power steering fluid reservoir .....7-22
10. Jumper terminal .....6-4

* The actual engine compartment in the vehicle may differ from the illustration.

OBH018005N

■ **5.0 Engine**

1. Engine coolant reservoir .....7-18
2. Radiator cap .....7-19
3. Brake fluid reservoir .....7-21
4. Air cleaner .....7-24
5. Engine oil dipstick .....7-16
6. Engine oil filler cap .....7-16
7. Windshield washer fluid reservoir .....7-23
8. Fuse box .....7-49
9. Power steering fluid reservoir .....7-22
10. Jumper terminal .....6-4

* The actual engine compartment in the vehicle may differ from the illustration.

OBH011101

Seats / 3-2
Seat belts / 3-16
Child restraint system / 3-27
Air bag - advanced supplemental restraint system / 3-35

# Safety features of your vehicle

# 3

## SEATS

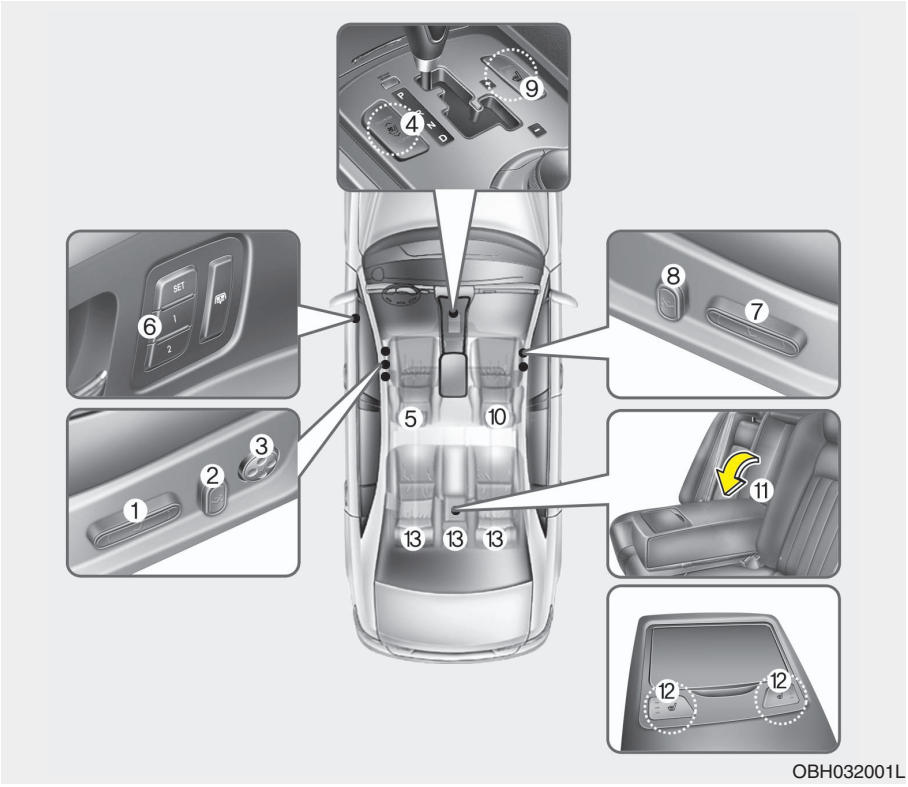


C010000ABH-EU

### Driver's seat

(1) Forward and backward/Seat cushion height
(2) Seatback angle
(3) Lumbar support
(4) Seat warmer or Climate control seat*
(5) Headrest
(6) Driver position memory system*

### Front passenger's seat

(7) Forward and backward
(8) Seatback angle*
(9) Seat warmer*
(10) Headrest

### Rear seat

(11) Armrest
(12) Seat warmer*
(13) Headrest

*: if equipped

**⚠ WARNING - Loose objects**

**Loose objects in the driver's foot area could interfere with the operation of the foot pedals, possibly causing an accident. Do not place anything under the front seats.**

**⚠ WARNING - Driver responsibility for passengers**

**Riding in a vehicle with the seatback reclined could lead to serious or fatal injury in an accident. If a seat is reclined during an accident, the occupant's hips may slide under the lap portion of the seat belt applying great force to the unprotected abdomen. Serious or fatal internal injuries could result. The driver must advise the passenger to keep the seatback in an upright position whenever the vehicle is in motion.**

**⚠ WARNING**

**Do not use a sitting cushion that reduces friction between the seat and passenger. The passenger's hips may slide under the lap portion of the seat belt during an accident or a sudden stop. Serious or fatal internal injuries could result because the seat belt can't operate normally.**

**⚠ WARNING - Driver's seat**

- **Never attempt to adjust the seat while the vehicle is moving. This could result in loss of control, and an accident causing death, serious injury, or property damage.**
- **Do not allow anything to interfere with the normal position of the seatback. Storing items against a seatback or in any other way interfering with proper locking of a seatback could result in serious or fatal injury in a sudden stop or collision.**

**(Continued)**

**(Continued)**

- **Always drive and ride with your seatback upright and the lap portion of the seat belt snug and low across the hips. This is the best position to protect you in case of an accident.**
- **In order to avoid unnecessary and perhaps severe air bag injuries, always sit as far back as possible from the steering wheel while maintaining comfortable control of the vehicle. We recommend that your chest be at least 10 inches (250 mm) away from the steering wheel.**

**⚠ WARNING**

- **Do not adjust the seat while wearing seat belts. Moving the seat cushion forward may cause strong pressure on the abdomen.**
- **Use extreme caution so that hands or other objects are not caught in the seat mechanisms while the seat is moving.**
- **Do not put a cigarette lighter on the floor or seat. When you operate the seat, gas may gush out of the lighter and cause fire.**

C010200AEN

## Front seat adjustment - power

The front seat can be adjusted by using the control knob located on the outside of the seat cushion. Before driving, adjust the seat to the proper position so as to easily control the steering wheel, pedals and switches on the instrument panel.

**⚠ WARNING**

**The power seat is operable with the ignition OFF.**

**Therefore, children should never be left unattended in the car.**

**⚠ CAUTION**

- ***The power seat is driven by an electric motor. Stop operating once the adjustment is completed. Excessive operation may damage the electrical equipment.***
- ***When in operation, the power seat consumes a large amount of electrical power. To prevent unnecessary charging system drain, don't adjust the power seat longer than necessary while the engine is not running.***
- ***Do not operate two or more power seat control knobs at the same time. Doing so may result in power seat motor or electrical component malfunction.***

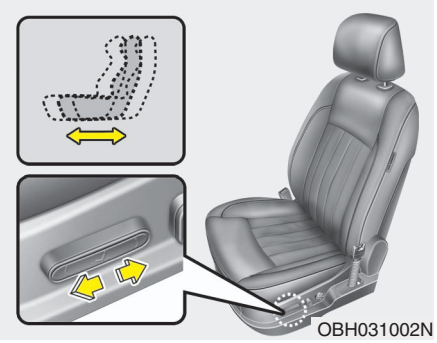


C010201AUN

### *Forward and rearward*

Push the control knob forward or rearward to move the seat to the desired position. Release the knob once the seat reaches the desired position.

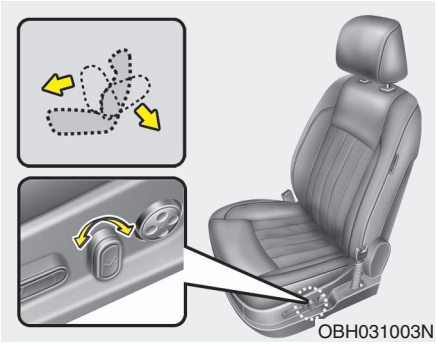


C010202ABH

### *Seatback angle (if equipped)*

Push the control knob forward or rearward to move the seatback to the desired angle. Release the knob once the seat reaches the desired position.

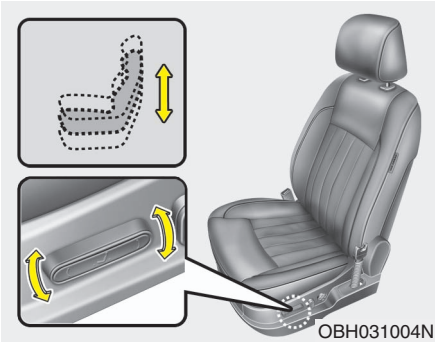


C010203ABH

### *Seat cushion height (for driver's seat)*

Pull the front portion of the control knob up to raise or push down to lower the front part of the seat cushion. Pull the rear portion of the control knob up to raise or push down to lower the rear part of the seat cushion. Release the knob once the seat reaches the desired position.

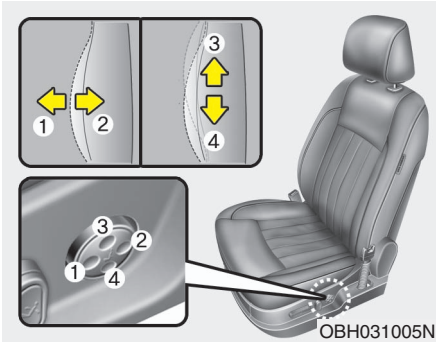


C010204ABH

### *Lumbar support (for driver's seat)*

The lumbar support can be adjusted by pressing the lumbar support switch on the side of the drivers seat. Press the front portion of the switch (1) to increase support, or the rear portion of the switch (2), to decrease support.

Move the support position up and down by pressing the switch (3) or (4).

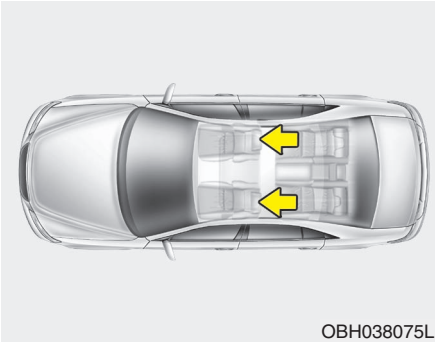
OBH038075L

C010104ABH-EU

***Headrest***

The driver's and front passenger's seats are equipped with a headrest for the occupant's safety and comfort.

The headrest not only provides comfort for the driver and front passenger, but also helps to protect the head and neck in the event of a collision.

**⚠ WARNING**

- **For maximum effectiveness in case of an accident, the headrest should be adjusted so the middle of the headrest is at the same height as the center of gravity of an occupant's head. Generally, the center of gravity of most people's head is similar with the height of the top of their eyes. Also, adjust the headrest as close to your head as possible. For this reason, the use of a cushion that holds the body away from the seatback is not recommended.**
- **Do not operate the vehicle with the headrests removed as severe injury to the occupants may occur in the event of an accident. Headrests may provide protection against neck injuries when properly adjusted.**
- **Do not adjust the headrest position of the driver's seat while the vehicle is in motion.**

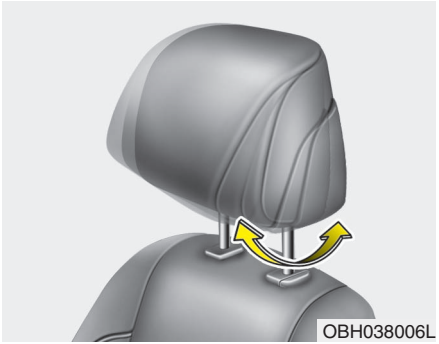
OBH038006L

**Forward and rearward adjustment**

The headrest may be adjusted forward or rearward by pulling the lower part of the headrest forward or rearward to the desired detent in the direction of the arrow. Adjust the headrest so that it properly supports the head and neck.

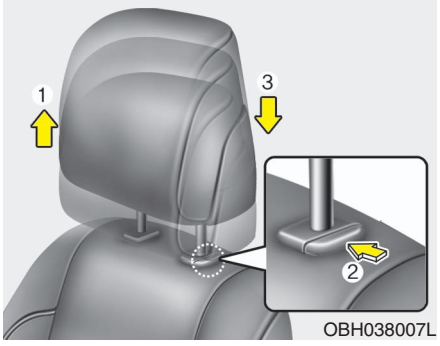


**Adjusting the height up and down**

To raise the headrest, pull it up to the desired position (1). To lower the headrest, push and hold the release button (2) on the headrest support and lower the headrest to the desired position (3).

**Removal**

For your safety, the front headrest can't be removed. If there is any problem with the front headrest, take your vehicle to an authorized HYUNDAI dealer and have the system checked.

**⚠ WARNING**

**Do not operate the vehicle with the headrests removed as severe injury to the occupants may occur in the event of an accident. Headrests may provide protection against neck injuries when properly adjusted.**

**Electronic active headrest (if equipped)**

The electronic active headrest is designed to trigger the headrest forward and upward when impact sensor detects a rear impact. This helps to prevent the driver's and front passenger's heads from moving backward and thus helps minimize neck injuries.

**⚠ CAUTION**

***The active headrest is a safety device to reduce injuries from a rear impact. Do not hit or pull the headrest intentionally.***

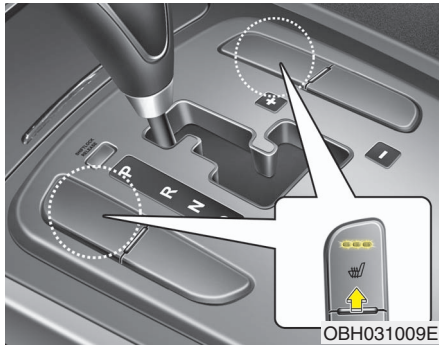


C010107ABH

***Seat warmer (if equipped)***

The seat warmer is provided to warm the front seats during cold weather. While the engine is running, push either of the switches to warm the driver's seat or the front passenger's seat.

During mild weather or under conditions where the operation of the seat warmer is not needed, keep the switches in the OFF position.

- Each time you push the switch, the temperature setting of the seat is changed as follows :

OFF→HIGH( )→MIDDLE( )→LOW( )

- When pressing the switch for more than 1.5 seconds with the seat warmer operating, the seat warmer will turn OFF.
- The seat warmer defaults to the OFF position whenever the ignition switch is turned on.

## ✻ NOTICE

**With the seat warmer switch in the ON position, the heating system in the seat turns off or on automatically depending on the seat temperature.**

## ⚠ CAUTION

- ***When cleaning the seats, do not use an organic solvent such as paint thinner, benzene, alcohol and gasoline. Doing so may damage the surface of the heater or seats.***
- ***To prevent overheating the seat warmer, do not place anything on the seats that insulates against heat, such as blankets, cushions or seat covers while the seat warmer is in operation.***
- ***Do not place heavy or sharp objects on seats equipped with seat warmers. Damage to the seat warming components could occur.***

## ⚠ WARNING - Seat warmer burns

**Passengers should use extreme caution when using seat warmers due to the possibility of excess heating or burns. The occupants must be able to feel if the seat is becoming too warm and to turn the seat warmer off. The seat warmer may cause burns even at low temperatures, especially if used for long periods of time. In particular, the driver must exercise extreme care for the following types of passengers:**

1. **Infants, children, elderly or disabled persons, or hospital outpatients**
2. **Persons with sensitive skin or those that burn easily**
3. **Fatigued individuals**
4. **Intoxicated individuals**
5. **Individuals taking medication that can cause drowsiness or sleepiness (sleeping pills, cold tablets, etc.)**

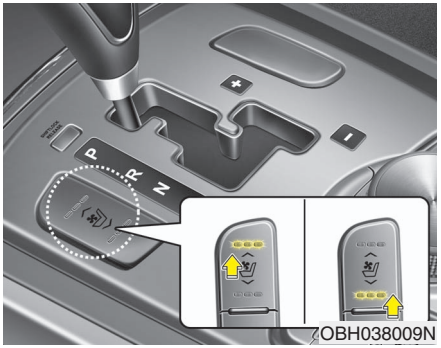


C010109ABH-EU

### *Climate control seat (if equipped)*

The climate control seat is provided to cool or warm the driver's seat during hot or cold weather by blowing air through small vent holes on the surface of the seat and seatback. While the engine is running, push the rear portion of the switch to cool the driver's seat, and push the front portion of the switch to warm the driver's seat.

When the operation of the climate control seat is not needed, keep the switch in the OFF position.

- Each time you push the switch, the airflow is changed as follows:

OFF→HIGH( )→MIDDLE( )→LOW( )

- When pressing the switch for more than 1.5 seconds with the climate control seat operating, the climate control seat will turn OFF.
- The climate control seat defaults to the OFF position whenever the ignition switch is turned on.

### ⚠ CAUTION

- ***The climate control seat is a supplementary cooling/heating system. Use the climate control seat when the climate control system is on. Using the climate control seat for prolonged periods of time with the climate control system off could impair the climate control seat performance.***
- ***When cleaning the seats, do not use an organic solvent such as paint thinner, benzene, alcohol and gasoline. Doing so may damage the surface of the seats.***
- ***Do not spill liquid such as water or beverages on the surface of the front seats and seatbacks, or the air vent holes may be blocked and prevented from working properly.***
- ***Do not place materials such as plastic bags or newspapers under the seats. The air vent may not work properly as the air intake can be blocked.***
- ***When the air vent does not operate, restart the vehicle. If there is no change, have your vehicle inspected by an authorized HYUNDAI dealer.***

**⚠ WARNING**

**Passengers should use extreme caution when using the climate control seat to warm due to the possibility of excess heating or burns. The occupants must be able to feel if the seat is becoming too warm and to turn the seat warmer off. In particular, the driver must exercise extreme care for the following types of passengers:**

1. **Infants, children, elderly or disabled persons, or hospital outpatients**
2. **Persons with sensitive skin or those that burn easily**
3. **Fatigued individuals**
4. **Intoxicated individuals**
5. **Individuals taking medication that can cause drowsiness or sleepiness (sleeping pills, cold tablets, etc.)**

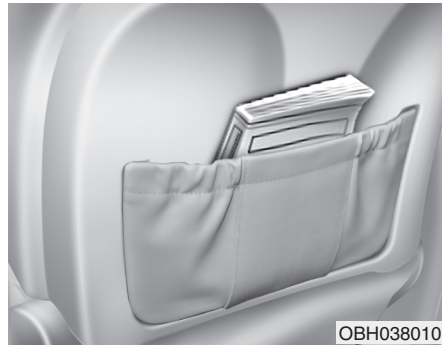


C010108AUN-EU

***Seatback pocket***

The seatback pocket is provided on the back of the front passenger's and driver's seatbacks.

**⚠ WARNING - Seatback pockets**

**Do not put heavy or sharp objects in the seatback pockets. In an accident they could come loose from the pocket and injure vehicle occupants.**

**⚠ WARNING**

**For proper operation of the occupant classification system:**

- **Do not place any items cumulatively weighing over 2.2 lbs (1 kg) in the passenger's seatback pocket or on the passenger's seat.**
- **Do not hang onto the front passenger seatback.**

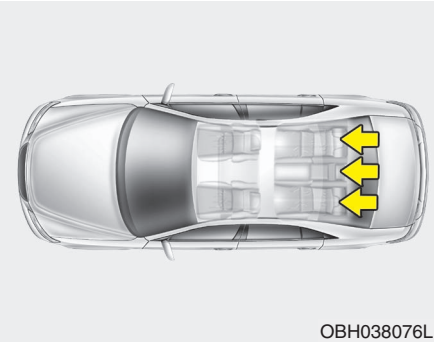

OBH038076L

## Rear seat

C010303ABH

### *Headrest*

The rear seat is equipped with headrests in all the seating positions for the occupant's safety and comfort.

The headrest not only provides comfort for passengers, but also helps to protect the head and neck in the event of a collision.

**⚠ WARNING**

- **For maximum effectiveness in case of an accident, the headrest should be adjusted so the middle of the headrest is at the same height as the center of gravity of an occupant's head. Generally, the center of gravity of most people's head is similar with the height of the top of their eyes. Also, adjust the headrest as close to your head as possible. The use of a cushion that holds the body away from the seatback is not recommended.**
- **Do not operate the vehicle with the headrests removed as severe injury to an occupant may occur in the event of an accident. Headrests may provide protection against severe neck injuries when properly adjusted.**

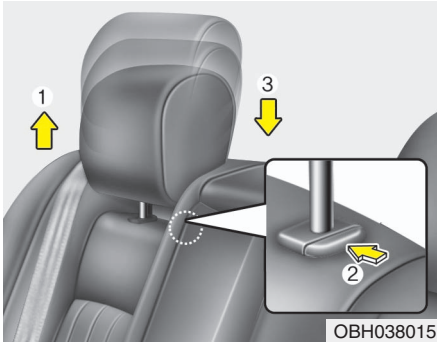


OBH038015

**Adjusting the height up and down**

To raise the headrest, pull it up to the desired position (1). To lower the headrest, push and hold the release button (2) on the headrest support and lower the headrest to the desired position (3).

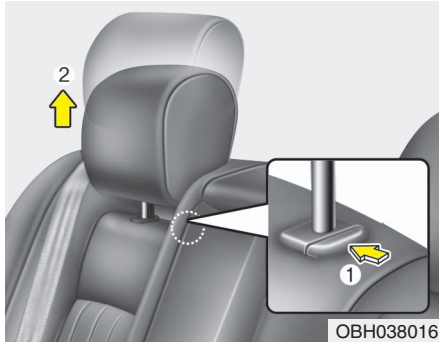


**Removal**

To remove the headrest, raise it as far as it can go then press the release button (1) while pulling upward (2).

**⚠ WARNING**

**Do not operate the vehicle with the headrests removed as severe injury to the occupants may occur in the event of an accident. Headrests may provide protection against neck injuries when properly adjusted.**

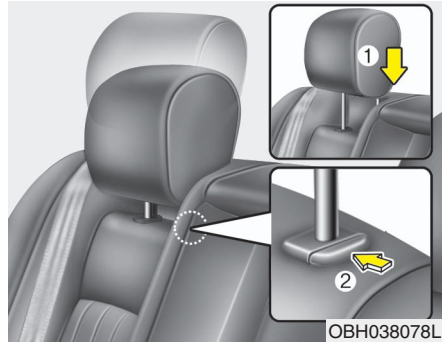


**Reinstall**

To reinstall the headrest, put the headrest poles(1) into the holes while pressing the release button(2). Then adjust it to the appropriate height.

**⚠ WARNING**

**Make sure the headrest locks in position after adjusting it to properly protects the occupants.**

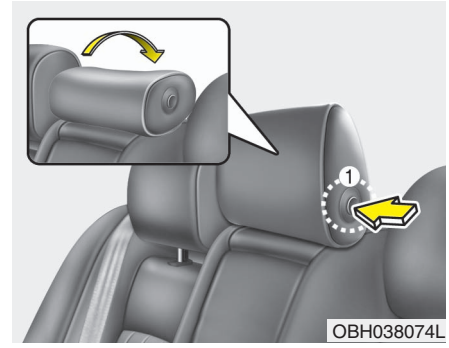


**Rear center seat headrest**

You can fold the rear center seat's headrest by pressing the upper part of the headrest while pushing the button (1).

To use the headrest, pull up the upper part of the headrest.

**⚠ WARNING**

**Do not operate the vehicle with the headrests folded as severe injury to an occupant may occur in the event of an accident. Headrests may provide protection against severe neck injuries when properly adjusted.**

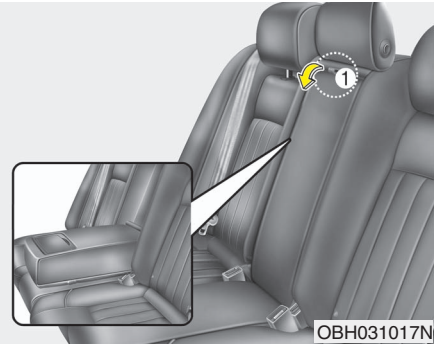


C010304ABH-EU

***Armrest***

The armrest is located in the center of the rear seat. Pull the armrest down by using the strap (1) provided on the armrest.

You will find cup holders on the armrest.

**Carrying long/narrow cargo (if equipped)**

Pull the armrest down using the strap provided on the armrest. Pull the cover down while pushing the release lever down. Additional cargo space is provided to accommodate long/narrow cargo (skis, poles, lumber, etc.) not able to fit properly in the trunk when closed.

## ⚠ CAUTION

- ***Make sure the engine is off, the shift lever is in P and the parking brake is applied whenever loading or unloading cargo. The vehicle may move if the shift lever is inadvertently moved to another position.***
- ***Be careful when loading cargo through the rear passenger seats to prevent damage to the vehicle interior.***
- ***When cargo is loaded through the rear passenger seats, ensure the cargo is properly secured to prevent it from moving while driving. Unsecured cargo in the passenger compartment can cause damage to the vehicle or injury to it's occupants.***

**⚠ WARNING - Cargo**

**Cargo should always be secured to prevent it from being thrown about the vehicle in a collision and causing injury to the vehicle occupants. Do not place objects on the rear seats, since they cannot be properly secured and may hit the front seat occupants in a collision.**

**⚠ WARNING - Cargo loading**

**Make sure the engine is off, the shift lever is in P (Park) and the parking brake is securely applied whenever loading or unloading cargo. Failure to take these steps may allow the vehicle to move if the shift lever is inadvertently moved to another position.**

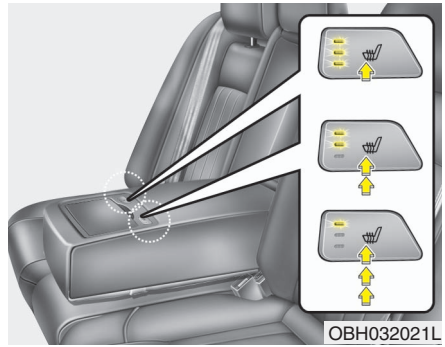


***Seat warmer (if equipped)***

The seat warmer is provided to warm the rear seats during cold weather. While the engine is running, push the switch to warm the rear seat.

During mild weather or under conditions where the operation of the seat warmer is not needed, keep the switches in the OFF position.

- Each time you push the button, the temperature setting of the seat is changed as follows :

OFF→HIGH( )→MIDDLE( )→LOW( )

- When pressing the switch for more than 1.5 seconds with the seat warmer operating, the seat warmer will turn OFF.
- The seat warmer defaults to the OFF position whenever engine start/stop button is turned to the ON position.

**✻ NOTICE**

**With the seat warmer switch in the ON position, the heating system in the seat turns off or on automatically depending on the seat temperature.**

**⚠ CAUTION**

- *When cleaning the seats, do not use an organic solvent such as thinner, benzene, alcohol and gasoline. Doing so may damage the surface of the heater or seats.*
- *To prevent overheating the seat warmer, do not place anything on the seats that insulates against heat, such as blankets, cushions or seat covers while the seat warmer is in operation.*
- *Do not place heavy or sharp objects on seats equipped with seat warmers. Damage to the seat warming components could occur.*

**⚠ WARNING - Seat warmer burns**

**Passengers should use extreme caution when using seat warmers due to the possibility of excess heating or burns. The occupants must be able to feel if the seat is becoming too warm and to turn the seat warmer off. The seat warmer may cause burns even at low temperatures, especially if used for long periods of time. In particular, the driver must exercise extreme care for the following types of passengers:**

1. **Infants, children, elderly or disabled persons, or hospital outpatients**
2. **Persons with sensitive skin or those that burn easily**
3. **Fatigued individuals**
4. **Intoxicated individuals**
5. **Individuals taking medication that can cause drowsiness or sleepiness (sleeping pills, cold tablets, etc.)**

## SEAT BELTS

C020100AUN

### Seat belt restraint system

**⚠ WARNING**

- **For maximum restraint system protection, the seat belts must always be used whenever the car is moving.**
- **Seat belts are most effective when seatbacks are in the upright position.**
- **Children age 12 and under must always be properly restrained in the rear seat. Never allow children to ride in the front passenger seat. If a child over 12 must be seated in the front seat, he/she must be properly belted and the seat should be moved as far back as possible.**
- **Never wear the shoulder belt under your arm or behind your back. An improperly positioned shoulder belt can cause serious injuries in a crash. The shoulder belt should be positioned midway over your shoulder across your collarbone.**

**(Continued)**

**(Continued)**

- **Avoid wearing twisted seat belts. A twisted belt can't do its job as well. In a collision, it could even cut into you. Be sure the belt webbing is straight and not twisted.**
- **Be careful not to damage the belt webbing or hardware. If the belt webbing or hardware is damaged, replace it.**

**⚠ WARNING**

**Seat belts are designed to bear upon the bony structure of the body, and should be worn low across the front of the pelvis, or the pelvis, chest and shoulders, as applicable; wearing the lap section of the belt across the abdominal area must be avoided.**

**Seat belts should be adjusted as firmly as possible, consistent with comfort, to provide the protection for which they have been designed.**

**A slack belt will greatly reduce the protection afforded to the occupant.**

**(Continued)**

**(Continued)**

**Care should be taken to avoid contamination of the webbing with polishes, oils and chemicals and particularly battery acid. Cleaning may safely be carried out using mild soap and water. The belt should be replaced if webbing becomes frayed, contaminated or damaged. It is essential to replace the entire assembly after it has been worn in a severe impact even if damage to the assembly is not obvious. Belts should not be worn with straps twisted. Each seat belt assembly must only be used by one occupant; it is dangerous to put a belt around a child being carried on the occupant's lap.**

**⚠ WARNING**

- **No modifications or additions should be made by the user which will either prevent the seat belt adjusting devices from operating to remove slack, or prevent the seat belt assembly from being adjusted to remove slack.**
- **When you fasten the seat belt, be careful not to latch the seat belt in buckles of other seat. It's very dangerous and you may not be protected by the seat belt properly.**
- **Do not unfasten the seat belt and do not fasten and unfasten the seat belt repeatedly while driving. This could result in loss of control, and an accident causing death, serious injury, or property damage.**
- **When fastening the seat belt, make sure that the seat belt does not pass over objects that are hard or can break easily.**
- **Make sure there is nothing in the buckle. The seat belt may not be fastened securely.**

C020101CBH-EU

***Seat belt warning (for driver's seat)***

As a reminder to the driver, the seat belt warning light will blink for approximately 6 seconds each time you turn the ignition switch ON, regardless of belt fastening.

The warning light will blink again for approximately 6 seconds when starting the engine.

If the driver's seat belt is not fastened when the ignition switch is turned on, the seat belt warning light and chime will operate for approximately 6 seconds. But if it is fastened within the 6 seconds, the warning light will blink for the 6 seconds and the warning chime will turn off immediately.

If the driver's seat belt is disconnected after the ignition switch is turned to the ON position, the seat belt warning light will turn on for approximately 6 seconds. But if it is fastened within the 6 seconds, the warning light will turn off immediately.

If the driver's seat belt is not fastened when the vehicle speed exceeds 6 mph (10 km/h), the seat belt warning light and chime will operate for approximately 11 times with a pattern of 6 seconds on and 24 seconds off until the belt is fastened or the vehicle speed decreases below 3 mph (5 km/h).

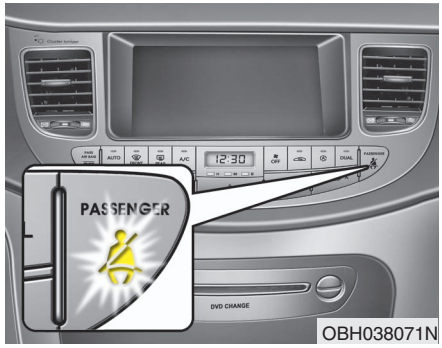

OBH038071N

***Seat belt warning (for front passenger's seat)***

As a reminder to the front passenger, the front passenger's seat belt warning light will blink for approximately 6 seconds each time you turn the ignition switch ON regardless of belt fastening. If the passenger's seat belt is unfastened when the vehicle speed exceeds 6 mph (10 km/h), the passenger's seat belt warning light will blink for at least 6 seconds until the belt is fastened.

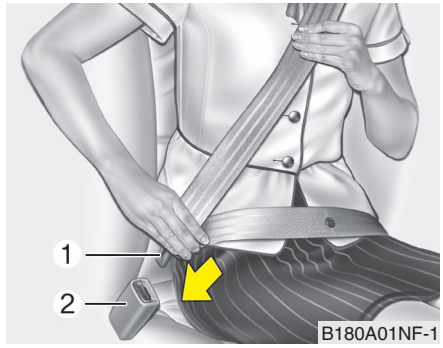

B180A01NF-1

C020102ABH-EU

***Seat belt - Driver's 3-point system with emergency locking retractor***

**To fasten your seat belt:**

To fasten your seat belt, pull it out of the retractor and insert the metal tab (1) into the buckle (2). There will be an audible "click" when the tab locks into the buckle.

The seat belt automatically adjusts to the proper length only after the lap belt portion is adjusted manually so that it fits snugly around your hips. If you lean forward in a slow, easy motion, the belt will extend and let you move around. If there is a sudden stop or impact, however, the belt will lock into position. It will also lock if you try to lean forward too quickly.

## ✻ NOTICE

**If you are not able to smoothly pull enough of the safety belt from the retractor, firmly pull the belt out and release it. Then you will be able to pull the belt out smoothly.**

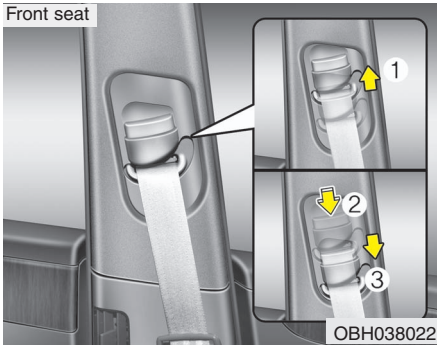


**Height adjustment**

You can adjust the height of the shoulder belt anchor to one of 4 positions for maximum comfort and safety.

The height of the seat belt should not be too near your neck. The shoulder portion should be adjusted so that it lies across your chest and midway over your shoulder nearest the door and not your neck.

To adjust the height of the seat belt anchor, lower or raise the height adjuster into an appropriate position.

To raise the height adjuster, pull it up (1). To lower it, push it down (3) while pressing the height adjuster button (2).

Release the button to lock the anchor into position. Try sliding the height adjuster to make sure that it has locked into position.

**⚠ WARNING**

- **Verify the shoulder belt anchor is locked into position at the appropriate height. Never position the shoulder belt across your neck or face. Improperly positioned seat belts can cause serious injuries in an accident.**
- **Failure to replace seat belts after an accident could leave you with damaged seat belts that will not provide protection in the event of another collision leading to personal injury or death. Replace your seat belts after being in an accident as soon as possible.**

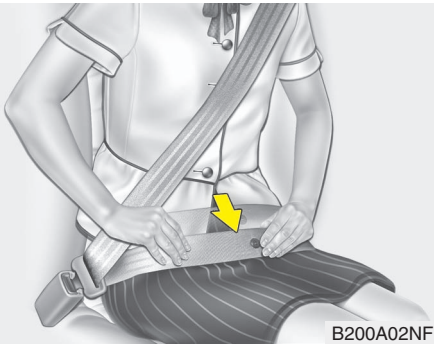


**⚠ WARNING**

**You should place the lap belt portion as low as possible and snugly across your hips, not on your waist. If the lap belt is located too high on your waist, it may increase the chance of injury in the event of a collision. Both arms should not be under or over the belt. Rather, one should be over and the other under, as shown in the illustration.**

**Never wear the seat belt under the arm nearest the door.**

C020106ABH

***Seat belts - Front passenger and rear seat 3-point system with combination locking retractor***

**To fasten your seat belt:**

Combination retractor type seat belts are installed in the rear seat positions to help accommodate the installation of child restraint systems. Although a combination retractor is also installed in the front passenger seat position, it is strongly recommended that children always be seated in the rear seat. NEVER place any infant restraint system in the front seat of the vehicle.

This type of seat belt combines the features of both an emergency locking retractor seat belt and an automatic locking retractor seat belt. To fasten your seat belt, pull it out of the retractor and insert the metal tab into the buckle. There will be an audible "click" when the tab locks into the buckle. When not securing a child restraint, the seat belt operates in the same way as the driver's seat belt (Emergency Locking Retractor Type). It automatically adjusts to the proper length only after the lap belt portion of the seat belt is adjusted manually so that it fits snugly around your hips.

When the seat belt is fully extended from the retractor to allow the installation of a child restraint system, the seat belt operation changes to allow the belt to retract, but not to extend (Automatic Locking Retractor Type). Refer to “Using a child restraint system” in this section.

## ✻ NOTICE

**Although the combination retractor provides the same level of protection for seated passengers in either emergency or automatic locking modes, it is recommended that seated passengers use the emergency locking feature for improved convenience. The automatic locking function is intended to facilitate child restraint installation. To convert from the automatic locking feature to the emergency locking operation mode, allow the unbuckled seat belt to fully retract.**

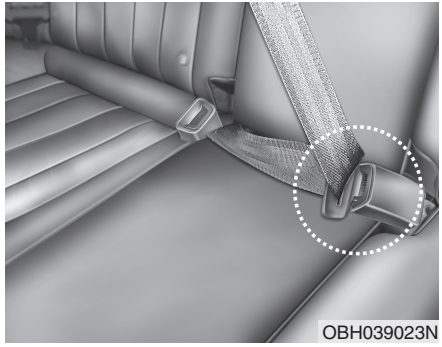


When using the rear center seat belt, the buckle with the “CENTER” mark must be used.

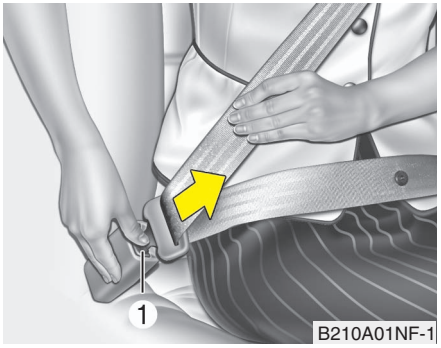


**To release the seat belt:**

The seat belt is released by pressing the release button (1) in the locking buckle. When it is released, the belt should automatically draw back into the retractor.

If this does not happen, check the belt to be sure it is not twisted, then try again.

C020200BBH-EU

## Pre-tensioner seat belt

Your vehicle is equipped with driver's and front passenger's pre-tensioner seat belts. The purpose of the pre-tensioner is to make sure that the seat belts fit tightly against the occupant's body in certain frontal collisions. The pre-tensioner seat belts may be activated in crashes where the frontal collision is severe enough.

**⚠ WARNING**

**For your safety, be sure that the belt webbing is not loose or twisted and always sit properly on your seat.**

When the vehicle stops suddenly, or if the occupant tries to lean forward too quickly, the seat belt retractor will lock into position. In certain frontal collisions, the pre-tensioner will activate and pull the seat belt into tighter contact against the occupant's body.

If the system senses excessive tension on the driver or passenger's seat belt when the pre-tensioner activates, the load limiter inside the pre-tensioner will release some of the pressure on the affected seat belt.

**⚠ WARNING**

**Do not put anything near the buckle. Placing objects near the buckle can adversely affect the anchor pre-tensioner and may increase the risk of personal injury in the event of a collision.**

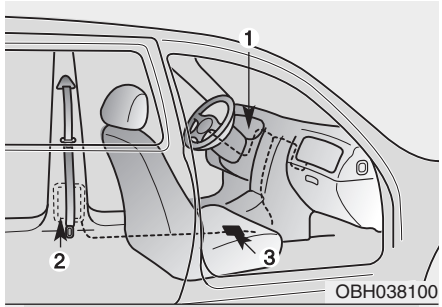


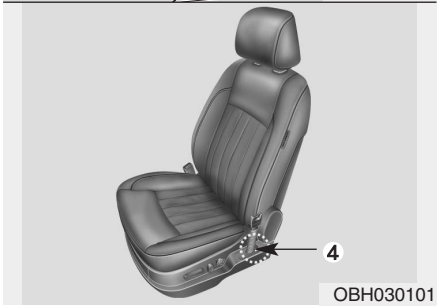


The seat belt pre-tensioner system consists mainly of the following components. Their locations are shown in the illustration:

1. SRS air bag warning light
2. Retractor pre-tensioner assembly
3. SRS control module
4. Anchor pre-tensioner assembly (driver side)

**⚠ WARNING**

**To obtain maximum benefit from a pre-tensioner seat belt:**

1. **The seat belt must be worn correctly and adjusted to the proper position. Please read and follow all of the important information and precautions about your vehicle's occupant safety features – including seat belts and air bags – that are provided in this manual.**
2. **Be sure you and your passengers always wear seat belts properly.**

**✻ NOTICE**

- **The driver's and front passenger's pre-tensioner seat belts may be activated in certain frontal collisions.**
  **The pre-tensioner seat belts can be activated where the frontal collision is severe enough, together with the air bags.**
- **When the pre-tensioner seat belts are activated, a loud noise may be heard and fine dust, which may appear to be smoke, may be visible in the passenger compartment. These are normal operating conditions and are not hazardous.**
- **Although it is harmless, the fine dust may cause skin irritation and should not be breathed for prolonged periods. Wash all exposed skin areas thoroughly after an accident in which the pre-tensioner seat belts were activated.**

### ✻ NOTICE

The sensor that activates the SRS air bag is connected with the pre-tensioner seat belt, and the SRS air bag warning light on the instrument panel will illuminate for approximately 6 seconds after the ignition switch has been turned to the ON position, and then it should turn off.

### ⚠ CAUTION

*If the pre-tensioner seat belt is not working properly, the warning light will illuminate even if there is no malfunction of the SRS air bag. If the SRS air bag warning light does not illuminate when the ignition switch is turned ON, or if it remains illuminated after illuminating for approximately 6 seconds, or if it illuminates while the vehicle is being driven, have an authorized HYUNDAI dealer inspect the pre-tensioner seat belt and SRS air bag system as soon as possible.*

### ⚠ WARNING

- **Pre-tensioners are designed to operate only one time. After activation, pre-tensioner seat belts must be replaced. All seat belts, of any type, should always be replaced after they have been worn during a collision.**
- **The pre-tensioner seat belt assembly mechanisms become hot during activation. Do not touch the pre-tensioner seat belt assemblies for several minutes after they have been activated.**
- **Do not attempt to inspect or replace the pre-tensioner seat belts yourself. This must be done by an authorized HYUNDAI dealer.**
- **Do not strike the pre-tensioner seat belt assemblies.**
- **Do not attempt to service or repair the pre-tensioner seat belt system in any manner.**

**(Continued)**

**(Continued)**

- **Improper handling of the pre-tensioner seat belt assemblies, and failure to heed the warnings not to strike, modify, inspect, replace, service or repair the pre-tensioner seat belt assemblies may lead to improper operation or inadvertent activation and serious injury.**
- **Always wear the seat belts when driving or riding in a motor vehicle.**
- **If the vehicle or pre-tensioner seat belt must be discarded, contact an authorized HYUNDAI dealer.**

C020300AUN-EU

## Seat belt precautions

**⚠ WARNING**

**All occupants of the vehicle must wear their seat belts at all times. Seat belts and child restraints reduce the risk of serious or fatal injuries for all occupants in the event of a collision or sudden stop. Without a seat belt, occupants could be shifted too close to a deploying air bag, strike the interior structure or be thrown from the vehicle. Properly worn seat belts greatly reduce these hazards.**

**Even with advanced air bags, unbelted occupants can be severely injured by a deploying air bag.**

**Always follow the precautions about seat belts, air bags and occupant safety contained in this manual.**

C020306AUN-EU

### *Infant or small child*

All 50 states have child restraint laws. You should be aware of the specific requirements in your state. Child and/or infant seats must be properly placed and installed in the rear seat. For more information about the use of these restraints, refer to “Child restraint system” in this section.

**⚠ WARNING**

**Every person in your vehicle needs to be properly restrained at all times, including infants and children. Never hold a child in your arms or lap when riding in a vehicle. The violent forces created during a crash will tear the child from your arms and throw the child against the interior. Always use a child restraint appropriate for your child's height and weight.**

**✻ NOTICE**

**Small children are best protected from injury in an accident when properly restrained in the rear seat by a child restraint system that meets the requirements of the Federal Motor Vehicle Safety Standards. Before buying any child restraint system, make sure that it has a label certifying that it meets Federal Motor Vehicle Safety Standard 213. The restraint must be appropriate for your child's height and weight. Check the label on the child restraint for this information. Refer to “Child restraint system” in this section.**

C020301AUN

### *Larger children*

Children who are too large for child restraint systems should always occupy the rear seat and use the available lap/shoulder belts. The lap portion should be fastened snug on the hips and as low as possible. Check belt fit periodically. A child's squirming could put the belt out of position. Children are afforded the most safety in the event of an accident when they are restrained by a proper restraint system in the rear seat. If a larger child (over age 12) must be seated in the front seat, the child should be securely restrained by the available lap/shoulder belt and the seat should be placed in the rearmost position. Children age 12 and under should be restrained securely in the rear seat. NEVER place a child age 12 and under in the front seat. NEVER place a rear facing child seat in the front seat of a vehicle.

If the shoulder belt portion slightly touches the child's neck or face, try placing the child closer to the center of the vehicle. If the shoulder belt still touches their face or neck they need to be returned to a child restraint system.

**⚠ WARNING - Shoulder belts on small children**

- **Never allow a shoulder belt to be in contact with a child's neck or face while the vehicle is in motion.**
- **If seat belts are not properly worn and adjusted on children, there is a risk of death or serious injury.**

C020302AKM

### *Restraint of pregnant women*

Pregnant women should wear lap/shoulder belt assemblies whenever possible according to specific recommendations by their doctors. The lap portion of the belt should be worn AS SNUGLY AND LOW AS POSSIBLE on the hips, not cross the abdomen.

**⚠ WARNING - Pregnant women**

**Pregnant women must never place the lap portion of the safety belt over the area of the abdomen where the fetus is located or above the abdomen where the belt could crush the fetus during an impact.**

C020303AUN

### *Injured person*

A seat belt should be used when an injured person is being transported. When this is necessary, you should consult a physician for recommendations.

C020304AUN

### *One person per belt*

Two people (including children) should never attempt to use a single seat belt. This could increase the severity of injuries in case of an accident.

C020305ABH

### *Do not lie down*

To reduce the chance of injuries in the event of an accident and to achieve maximum effectiveness of the restraint system, all passengers should be sitting up and the front and rear seats should be in an upright position when the car is moving. A seat belt cannot provide proper protection if the person is lying down in the rear seat or if the front and rear seats are in a reclined position.

**⚠ WARNING**

**Riding with a reclined seatback increases your chance of serious or fatal injuries in the event of a collision or sudden stop. The protection of your restraint system (seat belts and air bags) is greatly reduced by reclining your seat. Seat belts must be snug against your hips and chest to work properly. The more the seatback is reclined, the greater the chance that an occupant's hips will slide under the lap belt causing serious internal injuries or the occupant's neck could strike the shoulder belt. Drivers and passengers should always sit well back in their seats, properly belted, and with the seatbacks upright.**

C020400ABH

## Care of seat belts

Seat belt systems should never be disassembled or modified. In addition, care should be taken to assure that seat belts and belt hardware are not damaged by seat hinges, doors or other abuse.

C020401AEN

### *Periodic inspection*

All seat belts should be inspected periodically for wear or damage of any kind. Any damaged parts should be replaced as soon as possible.

C020402AUN

### *Keep belts clean and dry*

Seat belts should be kept clean and dry. If belts become dirty, they can be cleaned by using a mild soap solution and warm water. Bleach, dye, strong detergents or abrasives should not be used because they may damage and weaken the fabric.

C020403AEN

### *When to replace seat belts*

Entire in-use seat belt assembly or assemblies should be replaced if the vehicle has been involved in an accident. This should be done even if no damage is visible. Additional questions concerning seat belt operation should be directed to an authorized HYUNDAI dealer.

## CHILD RESTRAINT SYSTEM

C030000AEN-EU

Children riding in the car should sit in the rear seat and must always be properly restrained to minimize the risk of injury in an accident, sudden stop or sudden maneuver. According to accident statistics, children are safer when properly restrained in the rear seats than in the front seat. Larger children not in a child restraint should use one of the seat belts provided.

You should be aware of the specific requirements in your state. Child and/or infant safety seats must be properly placed and installed in the rear seat. You must use a commercially available child restraint system that meets the requirements of the Federal Motor Vehicle Safety Standards (FMVSS).

Child restraint systems are designed to be secured in vehicle seats by lap belts or the lap belt portion of a lap/shoulder belt, or by a LATCH system.

Children could be injured or killed in a crash if their restraints are not properly secured. For small children and babies, a child seat or infant seat must be used. Before buying a particular child restraint system, make sure it fits your car seat and seat belts, and fits your child. Follow all the instructions provided by the manufacturer when installing the child restraint system.

**⚠ WARNING**

- **A child restraint system must be placed in the rear seat. Never install a child or infant seat on the front passenger's seat. Should an accident occur and cause the passenger-side air bag to deploy, it could severely injure or kill an infant or child seated in an infant or child seat. Thus only use a child restraint in the rear seat of your vehicle.**
- **A seat belt or child restraint system can become very hot if it is left in a closed vehicle on a sunny day, even if the outside temperature does not feel hot. Be sure to check the seat cover and buckles before placing a child there.**
- **When the child restraint system is not in use, store it in the luggage area or fasten it with a seat belt so that it will not be thrown forward in the case of a sudden stop or an accident.**
- **Children may be seriously injured or killed by an inflating air bag. All children, even those too large for child restraints, must ride in the rear seat.**

**⚠ WARNING**

**To reduce the chance of serious or fatal injuries:**

- **Children of all ages are safer when restrained in the rear seat. A child riding in the front passenger seat can be forcefully struck by an inflating air bag resulting in serious or fatal injuries.**
- **Always follow the child restraint system manufacturer’s instructions for installation and use of the child restraint.**
- **Always make sure the child seat is secured properly in the car and your child is securely restrained in the child seat.**
- **Never hold a child in your arms or lap when riding in a vehicle. The violent forces created during a crash will tear the child from your arms and throw the child against the car’s interior.**
- **Never put a seat belt over yourself and a child. During a crash, the belt could press deep into the child causing serious internal injuries.**

**(Continued)**

**(Continued)**

- **Never leave children unattended in a vehicle – not even for a short time. The car can heat up very quickly, resulting in serious injuries to children inside. Even very young children may inadvertently cause the vehicle to move, entangle themselves in the windows, or lock themselves or others inside the vehicle.**
- **Never allow two children, or any two persons, to use the same seat belt.**
- **Children often squirm and reposition themselves improperly. Never let a child ride with the shoulder belt under their arm or behind their back. Always properly position and secure children in the rear seat.**
- **Never allow a child to stand-up or kneel on the seat or floor of a moving vehicle. During a collision or sudden stop, the child can be violently thrown against the vehicle's interior, resulting in serious injury.**

**(Continued)**

**(Continued)**

- **Never use an infant carrier or a child safety seat that "hooks" over a seatback, it may not provide adequate security in an accident.**
- **Seat belts can become very hot, especially when the car is parked in direct sunlight. Always check seat belt buckles before fastening them over a child.**
- **After an accident, have an authorized HYUNDAI dealer check the child restraint system, seat belt, tether anchor and lower anchor.**
- **If there is not enough space to place the child restraint system because of the driver's seat, install the child restraint system in the rear right seat.**

Rearward-facing child restraint system

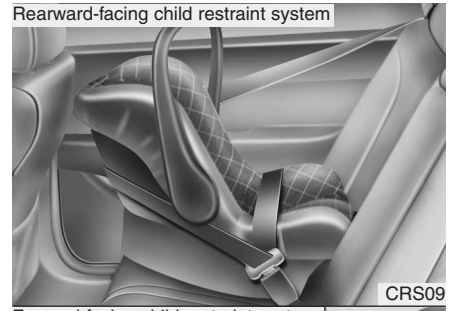

CRS09

Forward-facing child restraint system

OBH038024

C030100AEN-EU

## Using a child restraint system

For small children and babies, the use of a child seat or infant seat is required. This child seat or infant seat should be of appropriate size for the child and should be installed in accordance with the manufacturer's instructions.

For safety reasons, we recommend that the child restraint system be used in the rear seats.

**⚠ WARNING**

**Never place a rear-facing child restraint in the front passenger seat, because of the danger that an inflating passenger-side air bag could impact the rear-facing child restraint and kill the child.**

Since all passenger seat belts move freely under normal conditions and only lock under extreme or emergency conditions (emergency locking mode), you must manually change these seat belts to the automatic locking mode to secure a child restraint.

**⚠ WARNING - Child seat installation**

- **A child can be seriously injured or killed in a collision if the child restraint is not properly anchored to the car and the child is not properly restrained in the child restraint. Before installing the child restraint system, read the instructions supplied by the child restraint system manufacturer.**
- **If the seat belt does not operate as described in this section, have the system checked immediately by your authorized HYUNDAI dealer.**
- **Failure to observe this manual's instructions regarding child restraint systems and the instructions provided with the child restraint system could increase the chance and/or severity of injury in an accident.**

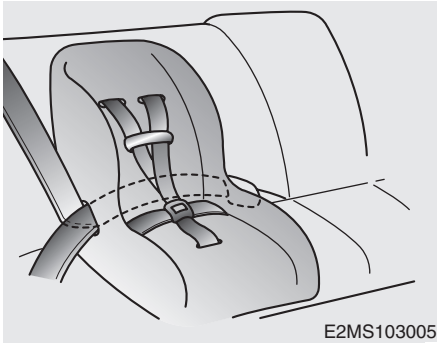


C030102BUN-EU

***Placing a passenger seat belt into the automatic locking mode***

The automatic locking mode will help prevent the normal movement of the child in the vehicle from causing the seat belt to loosen and compromise the child restraint system. To secure a child restraint system, use the following procedure.

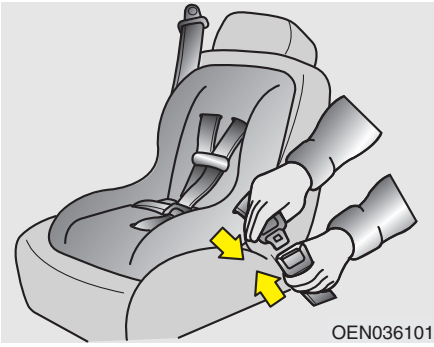
OEN036101

To install a child restraint system on the outboard or center rear seats, do the following:

1. Place the child restraint system on the seat and route the lap/shoulder belt around or through the restraint, following the restraint manufacturer's instructions. Be sure the seat belt webbing is not twisted.
2. Fasten the lap/shoulder belt latch into the buckle. Listen for the distinct "click" sound.

*Position the release button so that it is easy to access in case of an emergency.*

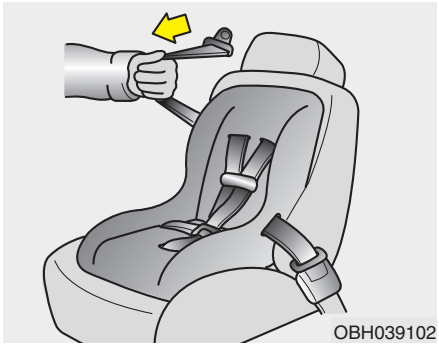
OBH039102

3. Pull the shoulder portion of the seat belt all the way out. When the shoulder portion of the seat belt is fully extended, it will shift the retractor to the "Automatic Locking" (child restraint) mode.

OBH039103

4. Slowly allow the shoulder portion of the seat belt to retract and listen for an audible "clicking" or "ratcheting" sound. This indicates that the retractor is in the "Automatic Locking" mode. If no distinct sound is heard, repeat steps 3 and 4.

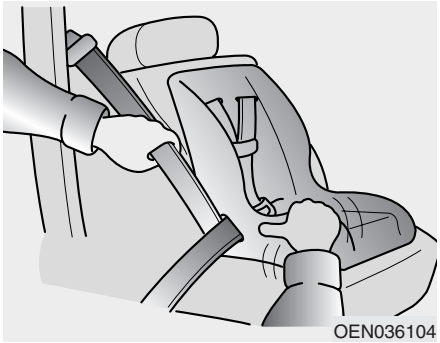
OEN036104

5. Remove as much slack from the belt as possible by pushing down on the child restraint system while feeding the shoulder belt back into the retractor.
6. Push and pull on the child restraint system to confirm that the seat belt is holding it firmly in place. If it is not, release the seat belt and repeat steps 2 through 6.
7. Double check that the retractor is in the "Automatic Locking" mode by attempting to pull more of the seat belt out of the retractor. If you cannot, the retractor is in the "Automatic Locking" mode.

To remove the child restraint, press the release button on the buckle and then pull the lap/shoulder belt out of the restraint and allow the seat belt to retract fully.

**⚠ WARNING - Automatic locking mode**

**The lap/shoulder belt automatically returns to the "emergency locking mode" whenever the belt is allowed to retract fully. Therefore, the preceding seven steps must be followed each time a child restraint is installed.**

**If the retractor is not in the Automatic Locking mode, the child restraint can move when your vehicle turns or stops suddenly. A child can be seriously injured or killed if the child restraint is not properly anchored to the car, including setting the retractor to the Automatic Locking mode.**

**When the seat belt is allowed to retract to its fully stowed position, the retractor will automatically switch from the "Automatic Locking" mode to the emergency lock mode for normal adult usage.**

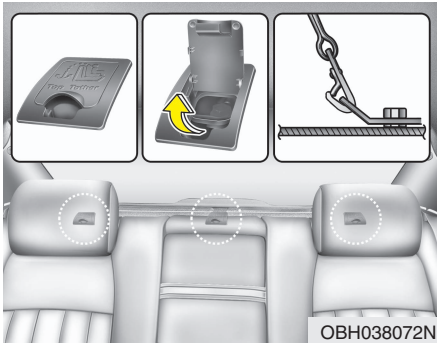
OBH038072N

C030103ABH-EU

***Securing a child restraint seat with "Tether Anchor" system***

Child restraint hook holders are located on the package tray.

1. Route the child restraint seat tether strap over the seatback.
   For vehicles with adjustable headrests, route the tether strap under the headrest and between the headrest posts, otherwise route the tether strap over the top of the seatback.
2. Connect the tether strap hook to the appropriate child restraint hook holder and tighten to secure the child restraint seat.

**⚠ WARNING**

**When using the vehicle's "Tether Anchor" system to install a child restraint system in the rear seat, all unused vehicle rear seat belt metal latch plates or tabs must be latched securely in their seat belt buckles and the seat belt webbing must be retracted behind the child restraint to prevent the child from reaching and taking hold of unretracted seat belts. Unlatched metal latch plates or tabs may allow the child to reach the unretracted seat belts which may result in strangulation and a serious injury or death to the child in the child restraint.**

**⚠ WARNING - Tether strap**

- **A child can be seriously injured or killed in a collision if the child restraint is not properly anchored. Always follow the child seat manufacturer's instructions for installation and use.**
- **Never mount more than one child restraint to a single tether anchor or to a single lower anchorage point. The increased load caused by multiple seats may cause the tethers or lower anchorage points to break, causing serious injury or death.**

**⚠ WARNING - Child restraint check**

**Check that the child restraint system is secure by pushing and pulling it in different directions. Incorrectly fitted child restraints may swing, twist, tip or separate causing death or serious injury.**

**⚠ WARNING**
**- Child restraint anchorage**

- **Child restraint anchorages are designed to withstand only those loads imposed by correctly fitted child restraints. Under no circumstances are they to be used for adult seat belts or harnesses or for attaching other items or equipment to the vehicle.**
- **The tether strap may not work properly if attached somewhere other than the correct tether anchor.**

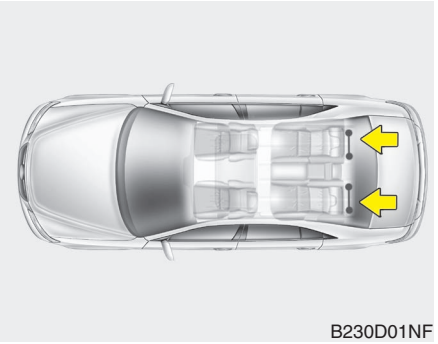


C030104AEN-EU

***Securing a child restraint seat with child seat lower anchor system***

Some child seat manufacturers make child restraint seats that are labeled as LATCH or LATCH-compatible child restraint seats. LATCH stands for "Lower Anchors and Tethers for Children". These seats include two rigid or webbing mounted attachments that connect to two LATCH anchors at specific seating positions in your vehicle. This type of child restraint seat eliminates the need to use seat belts to attach the child seat in the rear seats.

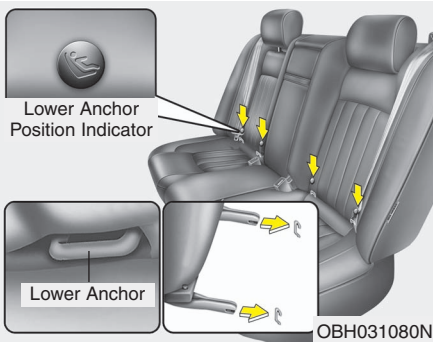


Child restraint symbols are located on the left and right rear seat backs to indicate the position of the lower anchors for child restraints.

**⚠ WARNING**

- **When using the vehicle's "LATCH" system to install a child restraint system in the rear seat, all unused vehicle rear seat belt metal latch plates or tabs must be latched securely in their seat belt buckles and the seat belt webbing must be retracted behind the child restraint to prevent the child from reaching and taking hold of unretracted seat belts. Unlatched metal latch plates or tabs may allow the child to reach the unretracted seat belts which may result in strangulation and a serious injury or death to the child in the child restraint.**
- **Do not place anything around the lower anchors. Also make sure that the seat belt is not caught in the lower anchors.**

LATCH anchors have been provided in your vehicle. The LATCH anchors are located in the left and right outboard rear seating positions. Their locations are shown in the illustration. There is no LATCH anchor provided for the center rear seating position.

The LATCH anchors are located between the seatback and the seat cushion of the rear seat left and right outboard seating positions.

Follow the child seat manufacturer's instructions to properly install child restraint seats with LATCH or LATCH-compatible attachments.

Once you have installed the LATCH child restraint, assure that the seat is properly attached to the LATCH and tether anchors.

Also, test the child restraint seat before you place the child in it. Tilt the seat from side to side. Also try to tug the seat forward. Check to see if the anchors hold the seat in place.

**⚠ CAUTION**

***Do not allow the rear seat belt webbing to get scratched or pinched by the child-seat latch and LATCH anchor during the installation.***

**⚠ WARNING**

**If the child restraint is not anchored properly, the risk of a child being seriously injured or killed in a collision greatly increases.**

**⚠ WARNING - LATCH lower anchors**

**LATCH lower anchors are only to be used with the left and right rear outboard seating positions. Never attempt to attach a LATCH equipped seat in the center seating position. You may damage the anchors or the anchors may fail and break in a collision.**

## AIR BAG - ADVANCED SUPPLEMENTAL RESTRAINT SYSTEM

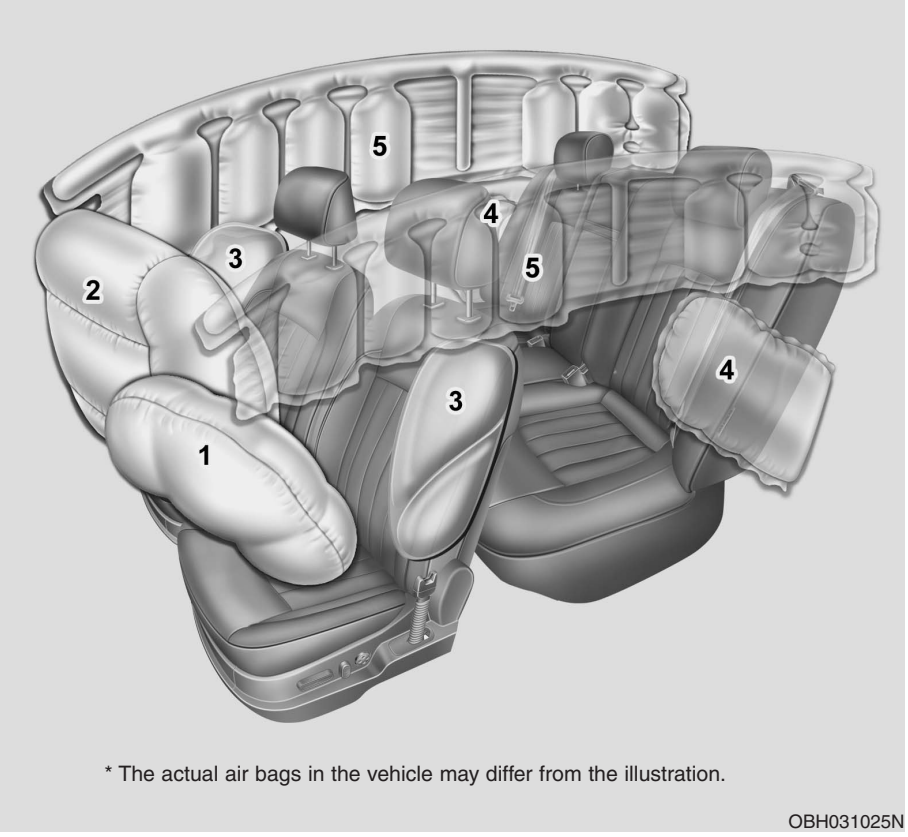


* The actual air bags in the vehicle may differ from the illustration.

OBH031025N

C040000ABH

(1) Driver's front air bag
(2) Passenger's front air bag
(3) Side impact air bag (front)
(4) Side impact air bag (rear, if equipped)
(5) Curtain air bag

**⚠ WARNING**

**Even in vehicles with air bags, you and your passengers must always wear the seat belts provided in order to minimize the risk and severity of injury in the event of a collision or rollover.**

C040900AEN-EU

## How does the air bag system operate

- Air bags are activated (able to inflate if necessary) only when the ignition switch is turned to the ON or START position.
- Air bags inflate in the event of a serious frontal or side collision in order to help protect the occupants from serious physical injury.
- There is no single speed at which the air bags will inflate.

  Generally, air bags are designed to inflate based upon the severity of a collision and its direction. These two factors determine whether the sensors produce an electronic deployment/ inflation signal.
- Air bag deployment depends on a number of factors including vehicle speed, angles of impact and the density and stiffness of the vehicles or objects which your vehicle hits in the collision. The determining factors are not limited to those mentioned above.
- The front air bags will completely inflate and deflate in an instant.

  It is virtually impossible for you to see the air bags inflate during an accident.

  It is much more likely that you will simply see the deflated air bags hanging out of their storage compartments after the collision.
- In order to help provide protection in a severe collision, the air bags must inflate rapidly. The speed of air bag inflation is a consequence of the extremely short time in which a collision occurs and the need to inflate the air bag between the occupant and the vehicle structures before the occupant impacts those structures. This speed of inflation reduces the risk of serious or life-threatening injuries in a severe collision and is thus a necessary part of air bag design.

  However, air bag inflation can also cause injuries which can include facial abrasions, bruises and broken bones because the inflation speed also causes the air bags to expand with a great deal of force.
- **There are even circumstances under which contact with the air bag can cause fatal injuries, especially if the occupant is positioned excessively close to the air bag.**

**⚠ WARNING**

- **To avoid severe personal injury or death caused by deploying air bags in a collision, the driver should sit as far back from the steering wheel air bag as possible (at least 10 inches (250 mm) away). The front passengers should always move their seats as far back as possible and sit back in their seat.**
- **Air bags inflate instantly in the event of collision, and passengers may be injured by the air bag expansion force if they are not in proper position.**
- **Air bag inflation may cause injuries including facial or bodily abrasions, injuries from broken glasses or burns.**

C040902AEN

### *Noise and smoke*

When the air bags inflate, they make a loud noise and they leave smoke and powder in the air inside of the vehicle. This is normal and is a result of the ignition of the air bag inflator. After the air bag inflates, you may feel substantial discomfort in breathing due to the contact of your chest with both the seat belt and the air bag, as well as from breathing the smoke and powder. **Open your doors and/or windows as soon as possible after impact in order to reduce discomfort and prevent prolonged exposure to the smoke and powder.**

Though the smoke and powder are non-toxic, they may cause irritation to the skin (eyes, nose and throat, etc). If this is the case, wash and rinse with cold water immediately and consult a doctor if the symptom persists.

**⚠ WARNING**

**When the air bags deploy, the air bag related parts in the steering wheel and/or instrument panel and/or in both sides of the roof rails above the front and rear doors and in the front seatbacks are very hot. To prevent injury, do not touch the air bag storage area's internal components immediately after an air bag has inflated.**

C040903AEN

### *Do not install a child restraint on the front passenger's seat.*

Never place a rear-facing child restraint in the front passenger's seat. If the air bag deploys, it would impact the rear-facing child restraint, causing serious or fatal injury.

In addition, do not place front-facing child restraints in the front passenger's seat either. If the front passenger air bag inflates, it could cause serious or fatal injuries to the child.

**⚠ WARNING**

- **Extreme Hazard! Do not use a rearward facing child restraint on a seat protected by an air bag in front of it!**
- **Never put a child restraint in the front passenger's seat. If the front passenger air bag inflates, it can cause serious or fatal injuries.**
- **When children are seated in the rear outboard seats of a vehicle equipped with side and/or curtain air bags, be sure to install the child restraint system as far away from the door side as possible, and securely lock the child restraint system in position.**

  **Inflation of side and/or curtain air bags could cause serious injury or death to an infant or child.**

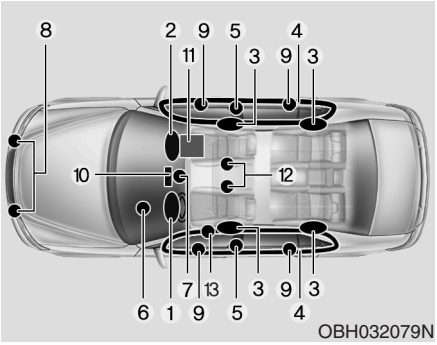


C040100ABH-EU

## SRS components and functions

The SRS consists of the following components:

1. Driver's front air bag module
2. Passenger's front air bag module
3. Side impact air bag modules
4. Curtain air bag modules
5. Retractor pre-tensioner assemblies
6. Air bag warning light
7. SRS control module (SRSCM)
8. Front impact sensors
9. Side impact sensors
10. “PASS AIR BAG OFF” indicator (Front passenger’s seat only)
11. Occupant classification system (Front passenger’s seat only)
12. Driver’s and front passenger’s seat belt buckle sensors
13. Driver’s anchor pre-tensioner assembly

The SRSCM continually monitors all SRS components while the ignition switch is ON to determine if a crash impact is severe enough to require air bag deployment or pre-tensioner seat belt deployment.

The SRS air bag warning light " " on the instrument panel will illuminate for about 6 seconds after the ignition switch is turned to the ON position, after which the SRS air bag warning light " " should go out.

**⚠ WARNING**

**If any of the following conditions occurs, this indicates a malfunction of the SRS. Have an authorized HYUNDAI dealer inspect the air bag system as soon as possible.**

- **The light does not turn on briefly when you turn the ignition ON.**
- **The light stays on after illuminating for approximately 6 seconds.**
- **The light comes on while the vehicle is in motion.**

Driver's front air bag (1)

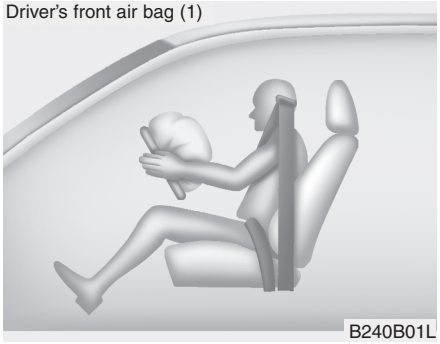


The front air bag modules are located both in the center of the steering wheel and in the front passenger's panel above the glove box. When the SRSCM detects a sufficiently severe impact to the front of the vehicle, it will automatically deploy the front air bags.

Driver's front air bag (2)

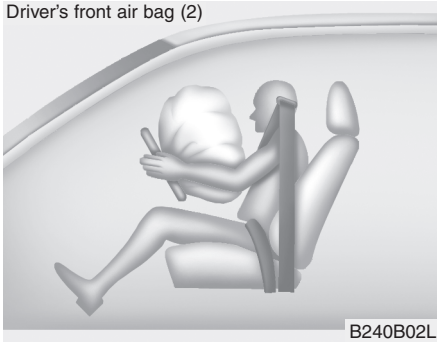


Upon deployment, tear seams molded directly into the pad covers will separate under pressure from the expansion of the air bags. Further opening of the covers then allows full inflation of the air bags.

Driver's front air bag (3)

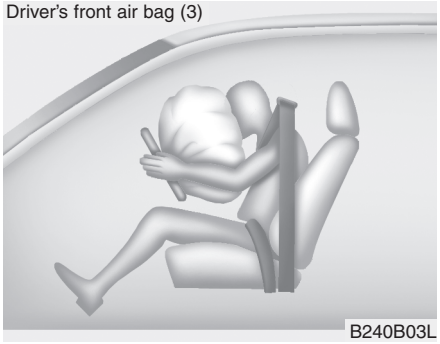


A fully inflated air bag, in combination with a properly worn seat belt, slows the driver's or the passenger's forward motion, reducing the risk of head and chest injury.

After complete inflation, the air bag immediately starts deflating, enabling the driver to maintain forward visibility and the ability to steer or operate other controls.

Passenger's front air bag

B240B05L

**⚠ WARNING**

- **Do not install or place any accessories (drink holder, CD holder, sticker, etc.) on the front passenger's panel above the glove box in a vehicle with a passenger's air bag. Such objects may become dangerous projectiles and cause injury if the passenger's air bag inflates.**
- **When installing a container of liquid air freshener inside the vehicle, do not place it near the instrument cluster nor on the instrument panel surface.**

  **It may become a dangerous projectile and cause injury if the passenger's air bag inflates.**

**⚠ WARNING**

- **If an air bag deploys, there may be a loud noise followed by a fine dust released in the vehicle. These conditions are normal and are not hazardous - the air bags are packed in this fine powder. The dust generated during air bag deployment may cause skin or eye irritation as well as aggravate asthma for some persons. Always wash all exposed skin areas thoroughly with lukewarm water and a mild soap after an accident in which the air bags were deployed.**
- **The SRS can function only when the ignition switch is in the ON position. If the SRS air bag warning light "" does not illuminate, or continuously remains on after illuminating for about 6 seconds when the ignition switch is turned to the ON position, or after the engine is started, comes on while driving, the SRS is not working properly. If this occurs, have your vehicle immediately inspected by an authorized HYUNDAI dealer.**

**(Continued)**

**(Continued)**

- **Before you replace a fuse or disconnect a battery terminal, turn the ignition switch to the LOCK position and remove the ignition key. Never remove or replace the air bag related fuse(s) when the ignition switch is in the ON position. Failure to heed this warning will cause the SRS "AIR BAG" warning light to illuminate.**

C040300ABH

## Occupant classification system

Your vehicle is equipped with an occupant classification system in the front passenger's seat.

The occupant classification system is designed to detect the presence of a properly-seated front passenger and determine if the passenger's front air bag should be enabled (may inflate) or not. The driver's front air bag is not affected or controlled by the occupant classification system.

## Main components of occupant classification system

- A detection device located under the front passenger seat cushion.
- Electronic system to determine whether the passenger air bag systems (both front and side) should be activated or deactivated.
- A warning light located on the instrument panel which illuminates the words "PASS AIR BAG OFF" indicating the front passenger air bag system is deactivated.
- The instrument panel air bag warning light is interconnected with the occupant classification system.

If the front passenger seat is occupied by a person that the system determines to be of adult size, and he/she sits properly (sitting upright with the seatback in an upright position, centered on the seat cushion with their seat belt on, legs comfortably extended and their feet on the floor), the "PASS AIR BAG OFF" indicator will be turned off and the front passenger's air bag will be able to inflate, if necessary, in frontal crashes.

You will find the "PASS AIR BAG OFF" indicator on the center facia panel. This system detects the conditions 1~4 in the following table and activates or deactivates the front passenger air bag based on these conditions.

Always be sure that you and all vehicle occupants are seated and restrained properly (sitting upright with the seat in an upright position, centered on the seat cushion, with the person's legs comfortably extended, feet on the floor, and wearing the safety belt properly) for the most effective protection by the air bag and the safety belt.

- The OCS may not function properly if the passenger takes actions which can affect the detection system. These include:
  (1) Failing to sit in an upright position.
  (2) Leaning against the door or center console.
  (3) Sitting towards the sides or the front of the seat.
  (4) Putting legs on the dashboard or resting them on other locations which reduce the passenger weight on the front seat.
  (5) Improperly wearing the safety belt.
  (6) Reclining the seat back.

C040301ABH

***Condition and operation in the front passenger occupant classification system***

| Condition detected by the occupant classification system | Indicator/Warning light | | Devices |
|---|---|---|---|
| | "PASS AIR BAG OFF" indicator light | SRS warning light | Front passenger air bag |
| 1. Adult *1 | Off | Off | Activated |
| 2. Child*2 or child restraint system*3 | On | Off | Deactivated |
| 3. Unoccupied | On | Off | Deactivated |
| 4. There is a malfunction in the system | On | On | Deactivated |

*1) The system judges a person of adult size as an adult. When a smaller adult sits in the front passenger seat, the system may recognize him/her as a child depending on his/her physique and posture.

*2) Do not allow children to ride in the front passenger seat. When a larger child who has outgrown a child restraint system sits in the front passenger seat, the system may recognize him/her as an adult depending on his/her physique or posture.

*3) Never install a child restraint system on the front passenger seat.

**⚠ WARNING**

**Riding in an improper position or placing weight on the front passenger's seat when it is unoccupied by a passenger adversely affects the occupant classification system (OCS).**

**(Continued)**

**(Continued)**

- **Never put a heavy load in the front passenger seat or seatback pocket.**

- **Never sit with hips shifted towards the front of the seat.**

- **Never place feet on the dashboard.**

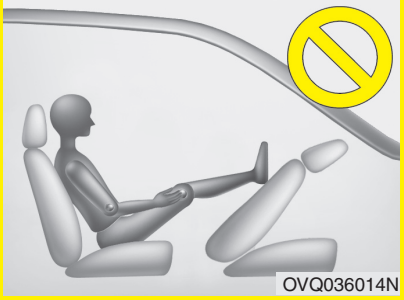


- **Never place feet on the front passenger seatback.**

- **Never excessively recline the front passenger seatback.**

- **Never lean on the door or center console.**
- **Never sit on one side of the front passenger seat.**

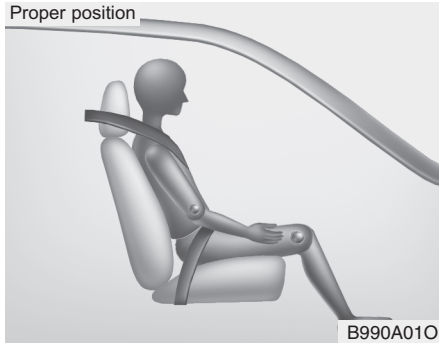


When an adult is seated in the front passenger seat, if the “PASS AIR BAG OFF” indicator is on, turn the ignition switch to the LOCK position and ask the passenger to sit properly (sitting upright with the seat back in an upright position, centered on the seat cushion with their seat belt on, legs comfortably extended and their feet on the floor). Restart the engine and have the person remain in that position for about 30 seconds. This will allow the system to detect the person and to enable the passenger air bag.

If the "PASS AIR BAG OFF" indicator is still on, ask the passenger to move to the rear seat.

**⚠ WARNING**

**Do not allow an adult passenger to ride in the front seat when the “PASS AIR BAG OFF” indicator is illuminated because the air bag will not deploy in the event of a crash. If the "PASS AIR BAG OFF" indicator remains illuminated after the adult passenger repositions themselves properly and the car is restarted, it is recommended that passenger move to the rear seat because the passenger's front air bag will not deploy.**

**The "PASS AIR BAG OFF" indicator will not change according to the occupants posture after the vehicle has been running for 30 seconds.**

**Front seat passengers must stay properly seated to avoid serious injury from a deploying air bag.**

**✻ NOTICE**

**The "PASS AIR BAG OFF" indicator illuminates for about 4 seconds after the ignition switch is turned to the ON position or after the engine is started. If the front passenger seat is occupied, the occupant classification sensor will then classify the front passenger after several more seconds.**

**⚠ WARNING**

- **Even though your vehicle is equipped with the occupant classification system, never install a child restraint system in the front passenger's seat. A deploying air bag can forcefully strike a child resulting in serious injuries or death. Any child age 12 and under should ride in the rear seat. Children too large for child restraints should use the available lap/shoulder belts. No matter what type of crash, children of all ages are safer when restrained in the rear seat.**
- **If the "PASS AIR BAG OFF" indicator is illuminated when the front passenger's seat is occupied by an adult and he/she sits properly (sitting upright with the seatback in an upright position, centered on the seat cushion with their seat belt on, legs comfortably extended and their feet on the floor), have that person sit in the rear seat.**

**(Continued)**

**(Continued)**

- **Do not modify or replace the front passenger seat. Don't place anything on or attach anything such as a blanket or seat heater to the front passenger seat. This can adversely affect the occupant classification system.**
- **Do not sit on sharp objects such as tools when occupying the front passenger seat. This can adversely affect the occupant classification system.**
- **Do not use accessory seat covers on the front seats.**
- **Accident statistics show that children are safer if they are restrained in the rear, as opposed to the front seat. It is recommended that child restraints be secured in a rear seat, including an infant riding in a rear-facing infant seat, a child riding in a forward-facing child seat and an older child riding in a booster seat.**

**(Continued)**

**(Continued)**

- **Air bags can only be used once – have an authorized HYUNDAI dealer replace the air bag immediately after deployment.**
- **A smaller-stature adult who is not seated correctly (for example: seat excessively reclined, leaning on the door or center console, or hips shifted forward in the seat) can cause a condition where the advanced frontal air bag system senses less weight than if the occupant were seated properly (sitting upright with the seatback in an upright position, centered on the seat cushion with their seat belt on, legs comfortably extended and their feet on the floor).**

  **This condition can result in an adult potentially being misclassified and illumination of the "PASS AIR BAG OFF" indicator.**

**⚠ WARNING**

**If the occupant classification system is not working properly, the SRS air bag warning light on the instrument panel will illuminate because the passenger's front air bag is connected with the occupant classification system. If there is a malfunction of the occupant classification system, the "PASS AIR BAG OFF" indicator will illuminate and the passenger's front air bag will not deploy in frontal impact crashes even if there is occupant in the front passenger's seat. If the SRS air bag warning light does not illuminate when the ignition switch is turned to the ON position, remains illuminated after approximately 6 seconds when the ignition switch is turned to the ON position, or if it illuminates while the vehicle is being driven, have an authorized HYUNDAI dealer inspect the occupant classification system and the SRS air bag system as soon as possible.**

Driver's front air bag

OBH038026L

C040400BBH-EU

## Driver's and passenger's front air bag

Your vehicle is equipped with a Supplemental Restraint (Air Bag) System and the lap/shoulder belts at both the driver and passenger seating positions. The indications of the system's presence are the letters "SRS AIR BAG" embossed on the air bag pad cover in the steering wheel and the passenger's side front panel pad above the glove box.

The SRS consists of air bags installed under the pad covers in the center of the steering wheel and the passenger's side front panel above the glove box.

Passenger's front air bag

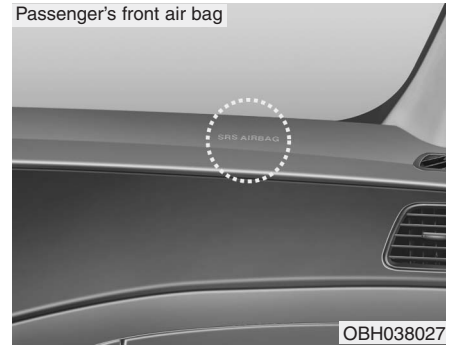


OBH038027

The purpose of the SRS is to provide the vehicle's driver and/or the front passenger with additional protection than that offered by the seat belt system alone in case of a frontal impact of sufficient severity. The SRS uses sensors to gather information about the driver's and front passenger's seat belt usage and impact severity.

**⚠ WARNING**

**If the occupant classification system is not working properly, the SRS air bag warning light on the instrument panel will illuminate because the SRS air bag warning light is connected with the occupant classification system. If the SRS air bag warning light does not illuminate when the ignition switch is turned to the ON position, remains illuminated after approximately 6 seconds when the ignition switch is turned to the ON position, or if it illuminates while the vehicle is being driven, have an authorized HYUNDAI dealer inspect the advanced SRS air bag system as soon as possible.**

The seat belt buckle sensors determine if the driver and front passenger's seat belts are fastened. These sensors provide the ability to control the SRS deployment based on whether or not the seat belts are fastened, and how severe the impact is.

The advanced SRS offers the ability to control the air bag inflation within two levels. A first stage level is provided for moderate-severity impacts. A second stage level is provided for more severe impacts.

According to the impact severity, and seat belt usage, the SRSCM (SRS Control Module) controls the air bag inflation. Failure to properly wear seat belts can increase the risk or severity of injury in an accident.

Additionally, your vehicle is equipped with an occupant classification system in the front passenger's seat. The occupant classification system detects the presence of a passenger in the front passenger's seat and will turn off the front passenger's air bag under certain conditions. For more detail, see "Occupant classification system" in this section.

**⚠ WARNING**

**Do not place any objects underneath the front seats as they could interfere with the occupant classification system.**

**⚠ WARNING**

**If you are considering modification of your vehicle due to a disability, please contact the Hyundai Customer Assistance Center at 1-800-633-5151.**

## ✻ NOTICE

- Be sure to read information about the SRS on the labels provided on the sun visor.
- Advanced air bags are combined with pre-tensioner seat belts to help provide enhanced occupant protection in frontal crashes. Front air bags are not intended to deploy in collisions in which protection can be provided by the pre-tensioner seat belt.

**⚠ WARNING**

**Always use seat belts and child restraints – every trip, every time, everyone! Air bags inflate with considerable force and in the blink of an eye. Seat belts help keep occupants in proper position to obtain maximum benefit from the air bag. Even with advanced air bags, improperly belted and unbelted occupants can be severely injured when the air bag inflates. Always follow the precautions about seat belts, air bags and occupant safety contained in this manual.**

**To reduce the chance of serious or fatal injuries and receive the maximum safety benefit from your restraint system:**

- **Never place a child in any child or booster seat in the front seat.**
- **ABC – Always Buckle Children in the back seat. It is the safest place for children of any age to ride.**
- **Front and side air bags can injure occupants improperly positioned in the front seats.**

**(Continued)**

**(Continued)**

- **Move your seat as far back as practical from the front air bags, while still maintaining control of the vehicle.**
- **You and your passengers should never sit or lean unnecessarily close to the air bags. Improperly positioned driver and passengers can be severely injured by inflating air bags.**
- **Never lean against the door or center console – always sit in an upright position.**
- **Do not allow an adult passenger to ride in the front seat when the "PASS AIR BAG OFF" indicator is illuminated, because the air bag will not deploy in the event of a moderate or severe frontal crash.**

**(Continued)**

**(Continued)**

- **No objects should be placed over or near the air bag modules on the steering wheel, instrument panel, and the front passenger's panel above the glove box, because any such object could cause harm if the vehicle is in a crash severe enough to cause the air bags to deploy.**
- **Never place covers, blankets or seat warmers on the passenger seat as these may interfere with the occupant classification system.**
- **Do not tamper with or disconnect SRS wiring or other components of the SRS system. Doing so could result in injury, due to accidental deployment of the air bags or by rendering the SRS inoperative.**
- **If the SRS air bag warning light remains illuminated while the vehicle is being driven, have an authorized HYUNDAI dealer inspect the air bag system as soon as possible.**

**(Continued)**

**(Continued)**

- **Air bags can only be used once – have an authorized HYUNDAI dealer replace the air bag immediately after deployment.**
- **The SRS is designed to deploy the front air bags only when an impact is sufficiently severe and when the impact angle is less than 30° from the forward longitudinal axis of the vehicle. Additionally, the air bags will only deploy once. Seat belts must be worn at all times.**
- **Front air bags are not intended to deploy in side-impact, rear-impact or rollover crashes. In addition, front air bags will not deploy in frontal crashes below the deployment threshold.**

**(Continued)**

Rear impact

OBH038058N

Side impact

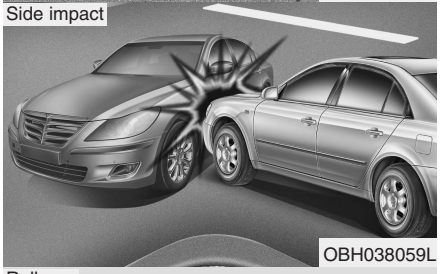

OBH038059L

Rollover

OBH038062

**(Continued)**

- **Even though your vehicle is equipped with the occupant classification system, do not install a child restraint system in the front passenger seat position. A child restraint system must never be placed in the front seat. The infant or child could be severely injured or killed by an air bag deployment in case of an accident.**
- **Children age 12 and under must always be properly restrained in the rear seat. Never allow children to ride in the front passenger seat. If a child over 12 must be seated in the front seat, he or she must be properly belted and the seat should be moved as far back as possible.**
- **For maximum safety protection in all types of crashes, all occupants including the driver should always wear their seat belts whether or not an air bag is also provided at their seating position to minimize the risk of severe injury or death in the event of a crash. Do not sit or lean unnecessarily close to the air bag while the vehicle is in motion.**

**(Continued)**

**(Continued)**

- **Sitting improperly or out of position can result in serious or fatal injury in a crash. All occupants should sit upright with the seatback in an upright position, centered on the seat cushion with their seat belt on, legs comfortably extended and their feet on the floor until the vehicle is parked and the ignition key is removed.**
- **The SRS air bag system must deploy very rapidly to provide protection in a crash. If an occupant is out of position because of not wearing a seat belt, the air bag may forcefully contact the occupant causing serious or fatal injuries.**

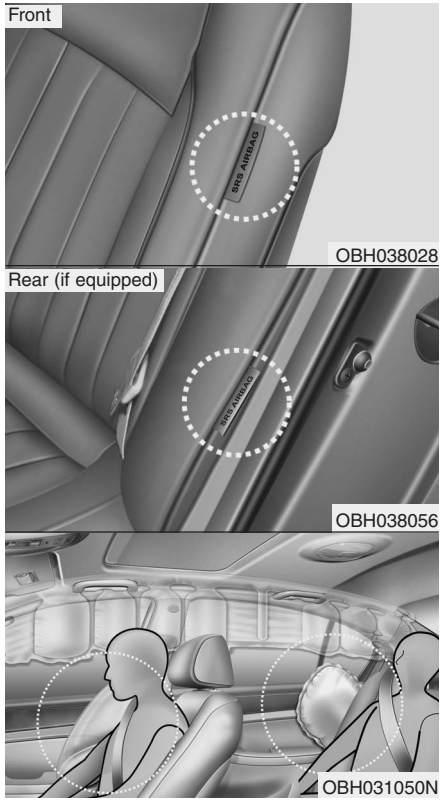


C040600ABH-EU

**Side impact air bag (if equipped)**

Your vehicle is equipped with a side impact air bag in each front and outboard rear seat. The purpose of the air bag is to provide the vehicle's driver and/or the front and outboard rear passenger with additional protection than that offered by the seat belt alone.

The side impact air bags are designed to deploy only during certain side-impact collisions, depending on the crash severity, angle, speed and point of impact. The side impact air bags are not designed to deploy in all side impact situations.

**⚠ WARNING**

**Do not allow the passengers to lean their heads or bodies onto doors, put their arms on the doors, stretch their arms out of the window, or place objects between the doors and passengers when they are seated on seats equipped with side and/or curtain air bags.**

**⚠ WARNING**

- **The side impact air bag is supplemental to the seat belt systems and is not a substitute for them. Therefore your seat belts must be worn at all times while the vehicle is in motion. The air bags deploy only in certain side impact conditions severe enough to cause significant injury to the vehicle occupants.**
- **For best protection from the side impact air bag system and to avoid being injured by the deploying side impact air bag, all seat occupants should sit in an upright position with the seat belt properly fastened. The driver's hands should be placed on the steering wheel at the 9:00 and 3:00 positions. The passengers' arms and hands should be placed on their laps.**
- **Do not use any accessory seat covers.**
- **Use of seat covers could reduce or prevent the effectiveness of the system.**

**(Continued)**

**(Continued)**

- **Do not install any accessories on the side or near the side impact air bag.**
- **Do not place any objects over the air bag or between the air bag and yourself.**
- **Do not place any objects (an umbrella, bag, etc.) between the door and the seat. Such objects may become dangerous projectiles and cause injury if the supplemental side impact air bag inflates.**
- **To prevent unexpected deployment of the side impact air bag that may result in personal injury, avoid impact to the side impact sensor when the ignition switch is on.**
- **If the seat or seat cover is damaged, have the vehicle checked and repaired by an authorized HYUNDAI dealer because your vehicle is equipped with side impact air bags and an occupant classification system.**

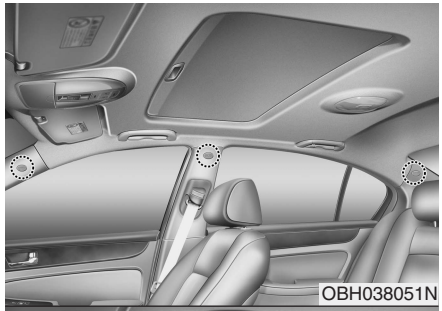


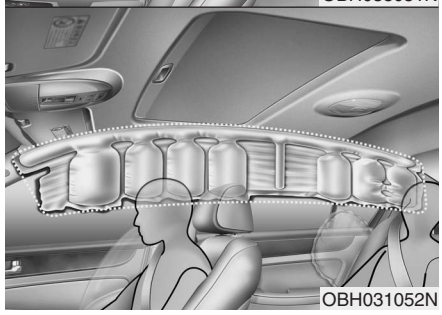


C040700AEN

## Curtain air bag

Curtain air bags are located along both sides of the roof rails above the front and rear doors.

They are designed to help protect the heads of the front seat occupants and the rear outboard seat occupants in certain side impact collisions.

The curtain air bags are designed to deploy only during certain side impact collisions, depending on the crash severity, angle, speed and impact. The curtain air bags are not designed to deploy in all side impact situations, collisions from the front or rear of the vehicle or in most rollover situations.

**⚠ WARNING**

- **In order for side and curtain air bags to provide the best protection, both front seat occupants and both outboard rear occupants should sit in an upright position with the seat belts properly fastened. Importantly, children should sit in a proper child restraint system in the rear seat.**

**(Continued)**

**(Continued)**

- **When children are seated in the rear outboard seats, they must be seated in the proper child restraint system. Make sure to position the child restraint system as far away from the door side as possible, and secure the child restraint system in a locked position.**
- **Do not allow the passengers to lean their heads or bodies onto doors, put their arms on the doors, stretch their arms out of the window, or place objects between the doors and passengers when they are seated on seats equipped with side and/or curtain air bags.**
- **Never try to open or repair any components of the side curtain air bag system. This should only be done by an authorized HYUNDAI dealer.**

**Failure to follow the above instructions can result in injury or death to the vehicle occupants in an accident.**

C040800ABH

## Why didn't my air bag go off in a collision? (Inflation and non-inflation conditions of the air bag)

**There are many types of accidents in which the air bag would not be expected to provide additional protection.**

**These include rear impacts, second or third collisions in multiple impact accidents, as well as low speed impacts. In other words, just because your vehicle is damaged and even if it is totally unusable, don't be surprised that the air bags did not inflate.**

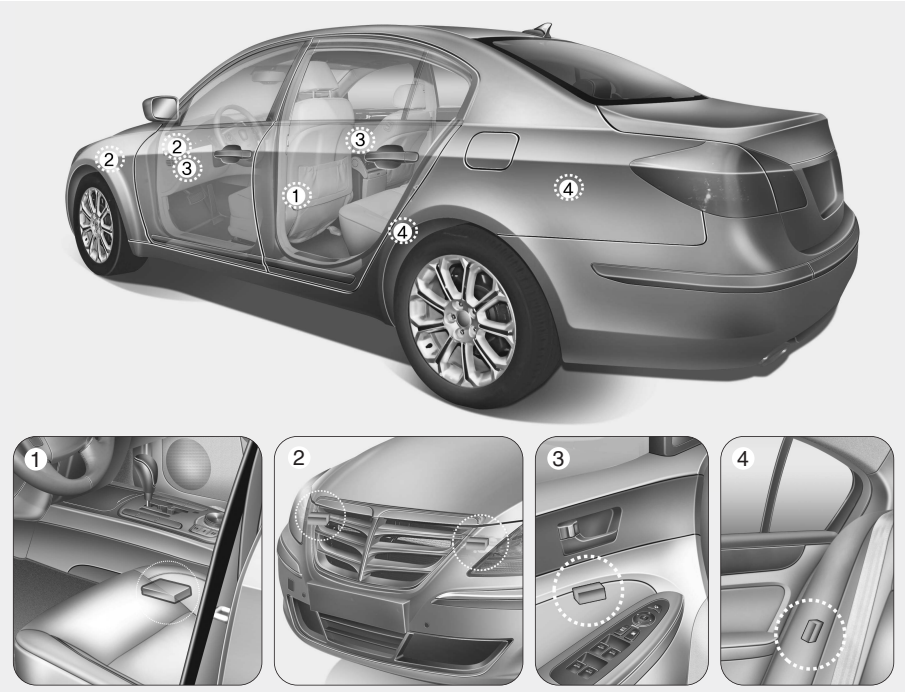


OBH032032/OBH038033/OBH032034L/OBH032035/OBH038036

***Air bag collision sensors***

(1) SRS control module
(2) Front impact sensor
(3) Side impact sensor (front)
(4) Side impact sensor (rear, if equipped)

**⚠ WARNING**

- **Do not hit or allow any objects to impact the locations where air bags or sensors are installed.**

  **This may cause unexpected air bag deployment, which could result in serious personal injury or death.**
- **If the installation location or angle of the sensors is altered in any way, the air bags may deploy when they should not or they may not deploy when they should, causing severe injury or death.**

  **Therefore, do not try to perform maintenance on or around the air bag sensors. Have the vehicle checked and repaired by an authorized HYUNDAI dealer.**

**(Continued)**

**(Continued)**

- **Problems may arise if the sensor installation angles are changed due to the deformation of the front bumper, body or B and C pillars where side collision sensors are installed. Have the vehicle checked and repaired by an authorized HYUNDAI dealer.**
- **Your vehicle has been designed to absorb impact and deploy the air bag(s) in certain collisions. Installing bumper guards or replacing a bumper with non-genuine parts may adversely affect your vehicle's collision and air bag deployment performance.**

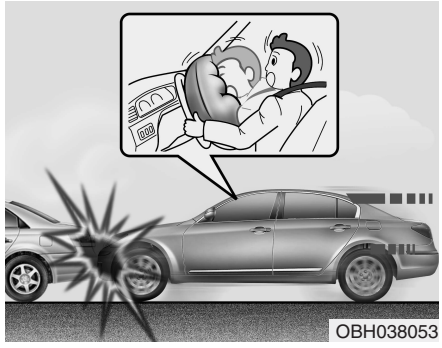


C040801AEN

### *Air bag inflation conditions*

**Front air bags**

Front air bags are designed to inflate in a frontal collision depending on the intensity, speed or angles of impact of the front collision.

OBH038059L

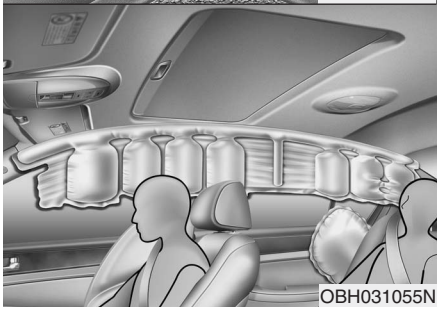
OBH031055N

**Side impact and curtain air bags**

Side impact and curtain air bags are designed to inflate when an impact is detected by side collision sensors depending on the strength, speed or angles of impact resulting from a side impact collision.

Although the driver's and front passenger's air bags are designed to inflate only in frontal collisions, they also may inflate in other types of collisions if the front impact sensors detect a sufficient impact. Side impact and curtain air bags are designed to inflate only in side impact collisions, but they may inflate in other collisions if the side impact sensors detect a sufficient impact.

If the vehicle chassis is impacted by bumps or objects on unimproved roads, the air bags may deploy. Drive carefully on unimproved roads or on surfaces not designed for vehicle traffic to prevent unintended air bag deployment.

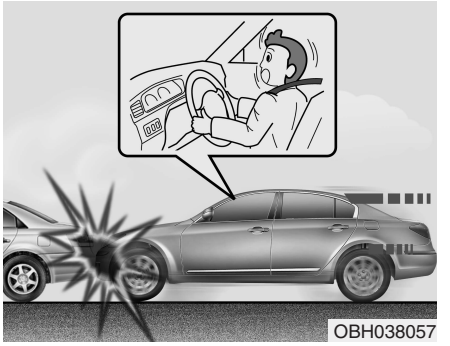
OBH038057

C040802AEN

***Air bag non-inflation conditions***

- In certain low-speed collisions the air bags may not deploy. The air bags are designed not to deploy in such cases because they may not provide benefits beyond the protection of the seat belts in such collisions.

OBH038058

- Frontal air bags are not designed to inflate in rear collisions, because occupants are moved backward by the force of the impact. In this case, inflated air bags would not be able to provide any additional benefit.

OBH038059L

- Front air bags may not inflate in side impact collisions, because occupants move to the direction of the collision, and thus in side impacts, frontal air bag deployment would not provide additional occupant protection.

  However, side impact and curtain air bags may inflate depending on the intensity, vehicle speed and angles of impact.

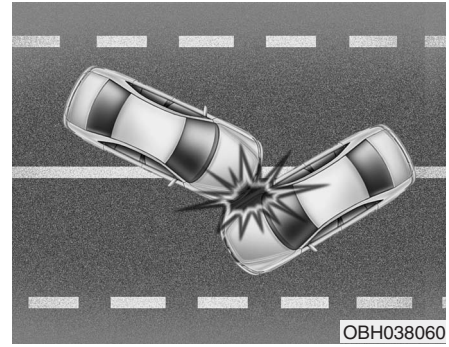
OBH038060

- In an angled collision, the force of impact may direct the occupants in a direction where the air bags would not be able to provide any additional benefit, and thus the sensors may not deploy any air bags.

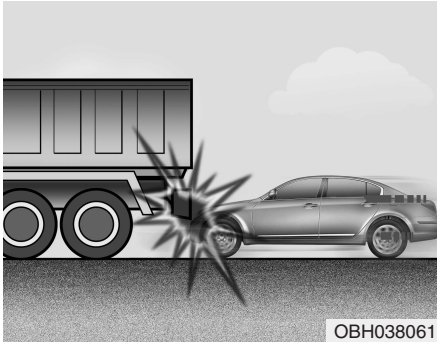
OBH038061

- Just before impact, drivers often brake heavily. Such heavy braking lowers the front portion of the vehicle causing it to “ride” under a vehicle with a higher ground clearance. Air bags may not inflate in this "under-ride" situation because deceleration forces that are detected by sensors may be significantly reduced by such “under-ride” collisions.

OBH038062

- Air bags may not inflate in rollover accidents because air bag deployment would not provide protection to the occupants.

  However, side impact and curtain air bags may inflate when the vehicle is rolled over by a side impact collision, if the vehicle is equipped with side impact air bags and curtain air bags.

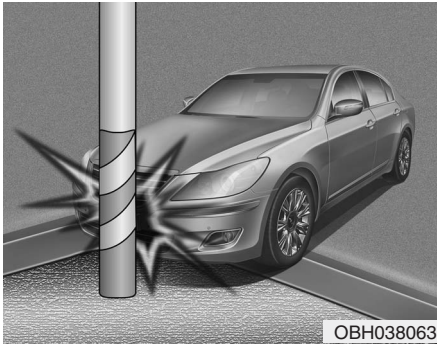
OBH038063

- Air bags may not inflate if the vehicle collides with objects such as utility poles or trees, where the point of impact is concentrated to one area and the full force of the impact is not delivered to the sensors.

C041100BBH

## SRS Care

The SRS is virtually maintenance-free and there are no parts you can safely service by yourself. If the SRS air bag warning light " " does not illuminate, when you turn the ignition on, or continuously remains on, have your vehicle immediately inspected by an authorized HYUNDAI dealer.

Any work on the SRS system, such as removing, installing, repairing, or any work on the steering wheel, the front passenger's panel, front seats and roof rails must be performed by an authorized HYUNDAI dealer. Improper handling of the SRS system may result in serious personal injury.

**⚠ WARNING**

- **Modification to SRS components or wiring, including the addition of any kind of badges to the pad covers or modifications to the body structure, can adversely affect SRS performance and lead to possible injury.**
- **For cleaning the air bag pad covers, use only a soft, dry cloth or one which has been moistened with plain water. Solvents or cleaners could adversely affect the air bag covers and proper deployment of the system.**
- **No objects should be placed over or near the air bag modules on the steering wheel, instrument panel, and the front passenger's panel above the glove box, because any such object could cause harm if the vehicle is in a crash severe enough to cause the air bags to inflate.**

**(Continued)**

**(Continued)**

- **If the air bags inflate, they must be replaced by an authorized HYUNDAI dealer.**
- **Do not tamper with or disconnect SRS wiring, or other components of the SRS system. Doing so could result in injury, due to accidental inflation of the air bags or by rendering the SRS inoperative.**
- **If components of the air bag system must be discarded, or if the vehicle must be scrapped, certain safety precautions must be observed. An authorized HYUNDAI dealer knows these precautions and can give you the necessary information. Failure to follow these precautions and procedures could increase the risk of personal injury.**
- **If your car was flooded and has soaked carpeting or water on the flooring, you shouldn't try to start the engine; have the car towed to an authorized HYUNDAI dealer.**

C041300ABH

## Additional safety precautions

- All occupants should sit upright, fully back in their seats with their seat belts on and their feet on the floor.
- **Passengers should not move out of or change seats while the vehicle is moving.** A passenger who is not wearing a seat belt during a crash or emergency stop can be thrown against the inside of the vehicle, against other occupants, or out of the vehicle.
- **Each seat belt is designed to restrain one occupant.** If more than one person uses the same seat belt, they could be seriously injured or killed in a collision.
- **Do not use any accessories on seat belts.** Devices claiming to improve occupant comfort or reposition the seat belt can reduce the protection provided by the seat belt and increase the chance of serious injury in a crash.
- **Passengers should not place hard or sharp objects between themselves and the air bags.** Carrying hard or sharp objects on your lap or in your mouth can result in injuries if an air bag inflates.
- **Keep occupants away from the air bag covers.** All occupants should sit upright, fully back in their seats with their seat belts on and their feet on the floor. If occupants are too close to the air bag covers, they could be injured if the air bags inflate.
- **Do not attach or place objects on or near the air bag covers.** Any object attached to or placed on the front or side air bag covers could interfere with the proper operation of the air bags.
- **Do not modify the front seats.** Modification of the front seats could interfere with the operation of the supplemental restraint system sensing components or side air bags.
- **Do not place items under the front seats.** Placing items under the front seats could interfere with the operation of the supplemental restraint system sensing components and wiring harnesses.
- **Never hold an infant or child on your lap.** The infant or child could be seriously injured or killed in the event of a crash. All infants and children should be properly restrained in appropriate child safety seats or seat belts in the rear seat.

**⚠ WARNING**

- **Sitting improperly or out of position can cause occupants to be shifted too close to a deploying air bag, strike the interior structure or be thrown from the vehicle resulting in serious injury or death.**
- **Always sit upright with the seatback in an upright position, centered on the seat cushion with your seat belt on, legs comfortably extended and your feet on the floor.**

C041400AUN

## Adding equipment to or modifying your air bag-equipped vehicle

If you modify your vehicle by changing your vehicle's frame, bumper system, front end or side sheet metal or ride height, this may affect the operation of your vehicle's air bag system.

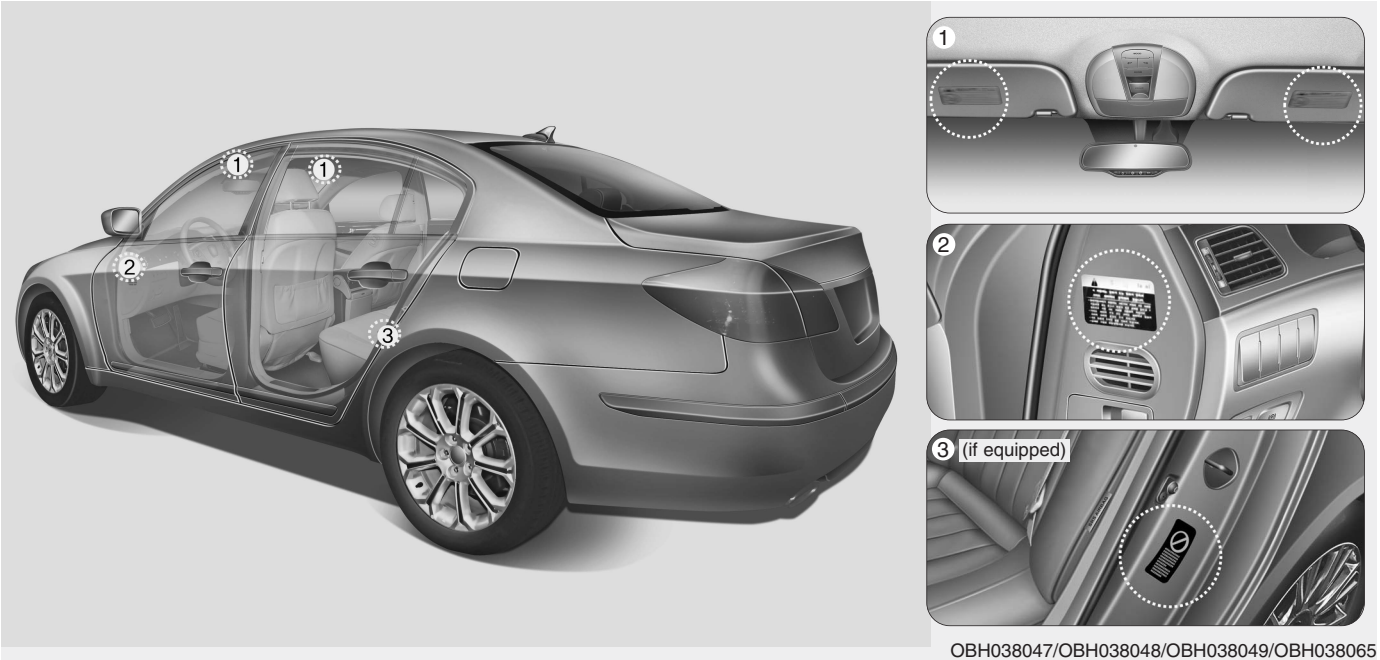


OBH038047/OBH038048/OBH038049/OBH038065

C041200AUN-EU

## Air bag warning label

Air bag warning labels, some required by the U.S. National Highway Traffic Safety Administration (NHTSA), are attached to alert the driver and passengers of potential risks of the air bag system.

Keys / 4-3
Smart key / 4-6
Remote keyless entry / 4-11
Theft-alarm system / 4-14
Door locks / 4-16
Trunk / 4-20
Windows / 4-23
Hood / 4-27

# Features of your vehicle

4

Fuel filler lid / 4-28
Sunroof / 4-31
Driver position memory system / 4-34
Steering wheel / 4-37
Mirrors / 4-39
Instrument cluster / 4-48
Parking assist system / 4-72
Rear view camera / 4-76
Hazard warning flasher / 4-76
Lighting / 4-77
Wipers and washers / 4-82
Interior light / 4-85
Defroster / 4-88
Automatic climate control system / 4-89

Windshield defrosting and defogging / 4-101
Storage compartments / 4-104
Interior features / 4-106
Audio system / 4-115

# 4 Features of your vehicle

## KEYS (FOR CANADA)

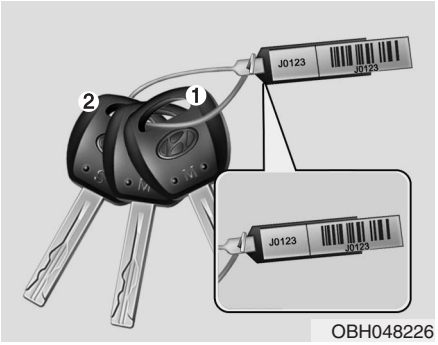

OBH048226

D010100AEN

### Record your key number

The key code number is stamped on the bar code tag attached to the key set. Should you lose your keys, this number will enable an authorized HYUNDAI dealer to duplicate the keys easily. Remove the bar code tag and store it in a safe place. Also, record the code number and keep it in a safe place (not in the vehicle).

D010200ABH

### Key operations

① Master key
Used to start the engine, lock and unlock the doors, lock and unlock the glove box, and open the trunk.

② Sub key
Used only to start the engine and lock and unlock the door.

**⚠ WARNING - Ignition key**

**Leaving children unattended in a vehicle with the ignition key is dangerous even if the key is not in the ignition switch. Children copy adults and they could place the key in the ignition switch. The ignition key would enable children to operate power windows or other controls, or even make the vehicle move, which could result in serious bodily injury or even death. Never leave the keys in your vehicle with unsupervised children.**

**⚠ WARNING**

**Use only HYUNDAI original parts for the ignition key in your vehicle. If an aftermarket key is used, the ignition switch may not return to ON after START. If this happens, the starter will continue to operate causing damage to the starter motor and possible fire due to excessive current in the wiring.**

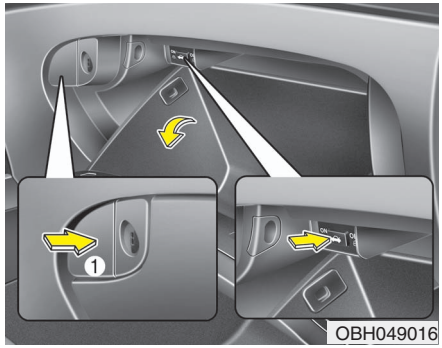


D010400ABH

## Trunk lock system

The trunk lid control button located in the vehicle glove box is used to prevent unauthorized access to the trunk.

### Trunk locking

To activate the trunk lock system so that the trunk can only be opened with the master key, perform the following:

1. Open the glove box by pushing the button (1).
2. Set the trunk lid control button to OFF position (not depressed).
3. Close the glove box and lock the glove box with the master key.

When leaving the key with a parking lot attendant or valet, perform steps 1 to 3 above and leave the sub key with the attendent. The sub key can start the engine and operate door locks only.

### Lock release

To release the trunk lock feature, open the glove box with the master key and set the trunk lid control button to ON position (depressed). In this position the trunk will open with the trunk lid release lever or transmitter. The trunk can never be opened with the sub key.

D010300CBH-EU

## Immobilizer system

Your vehicle is equipped with an electronic engine immobilizer system to reduce the risk of unauthorized vehicle use.

Your immobilizer system is comprised of a small transponder in the ignition key and electronic devices inside the vehicle.

With the immobilizer system, whenever you insert your ignition key into the ignition switch and turn it to ON, it checks and determines and verifies if the ignition key is valid or not.

If the key is determined to be valid, the engine will start.

If the key is determined to be invalid, the engine will not start.

***To deactivate the immobilizer system:***

Insert the ignition key into the key cylinder and turn it to the ON position.

***To activate the immobilizer system:***

Turn the ignition key to the OFF position. The immobilizer system activates automatically. Without a valid ignition key for your vehicle, the engine will not start.

**⚠ WARNING**

**In order to prevent theft of your vehicle, do not leave spare keys anywhere in your vehicle. Your Immobilizer password is a customer unique password and should be kept confidential. Do not leave this number anywhere in your vehicle.**

**✻ NOTICE**

**When starting the engine, do not use the key with other immobilizer keys around. Otherwise the engine may not start or may stop soon after it starts. Keep each key separate in order to avoid a starting malfunction.**

**⚠ CAUTION**

***Do not put metal accessories near the ignition switch.***

***The engine may not start because the metal accessories may interrupt the transponder signal from transmitting normally.***

**✻ NOTICE**

**If you need additional keys or lose your keys, consult an authorized HYUNDAI dealer.**

**⚠ CAUTION**

***The transponder in your ignition key is an important part of the immobilizer system. It is designed to give years of trouble-free service, however you should avoid exposure to moisture, static electricity and rough handling. Immobilizer system malfunction could occur.***

**⚠ CAUTION**

***Do not change, alter or adjust the immobilizer system because it could cause the immobilizer system to malfunction and should only be serviced by an authorized HYUNDAI dealer.***

***Malfunctions caused by improper alterations, adjustments or modifications to the immobilizer system are not covered by your vehicle manufacturer warranty.***

**This device complies with Part 15 of the FCC rules.**

Operation is subject to the following two conditions:

1. This device may not cause harmful interference, and
2. This device must accept any interference received, including interference that may cause undesired operation.

**⚠ WARNING**

**Changes or modifications not expressly approved by the party responsible for compliance could void the user's authority to operate the equipment.**

## SMART KEY

OTG040001

D040000ABH

With a smart key, you can lock or unlock a door (and trunk) and even start the engine without inserting the key.

The functions of buttons on a smart key are similar to the remote keyless entry. (Refer to the “Remote keyless entry” in this section.)

D040100ABH

### Smart key functions

With the smart key, you can lock and unlock the vehicle doors (and trunk), and the smart key enables starting of the engine as well. Detailed information follows:

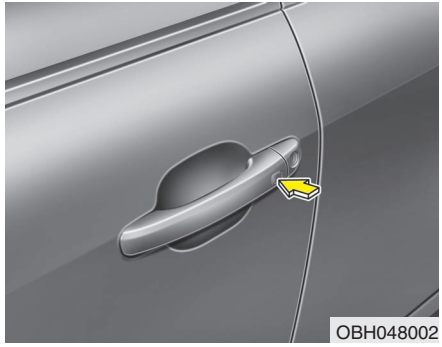
OBH048002

D040101ABH

***Locking***

Pressing the button in the front outside door handles with all doors (and trunk) closed and any door unlocked, locks all the doors (and trunk). The hazard warning lights blink and the chime sounds once to indicate that all doors (and trunk) are locked. The button will only operate when the smart key is within 0.7~1 m (28~40 in.) from the outside door handle. If you want to make sure that a door has been locked or not, you should check the door lock button inside the vehicle or pull the outside door handle.

Even though you press the outside door handle buttons, the doors will not lock and the chime will sound for 3 seconds if any of following occur:

- The smart key is in the vehicle.
- The ignition switch is in ACC or ON position.
- Any door, except the trunk, is open.

D040102BBH-EU

### *Unlocking*

Press the button in the driver's outside door handle with all doors (and trunk) closed and locked, to unlock the driver's door. The hazard warning lights blink and the chime sounds twice to indicate that the driver's door is unlocked. All doors (and trunk) are unlocked if the button is pressed once more within 4 seconds. The hazard warning lights will blink and the chime will sound twice to indicate that all doors (and trunk) are unlocked.

Press the button in the front passenger's outside door handle with all doors (and trunk) closed and locked, to unlock all doors (and trunk). The hazard warning lights blink and the chime sounds twice to indicate that all doors (and trunk) are unlocked. The button will only operate when the smart key is within 28~40 in. (0.7~1 m) from the outside door handle.

When the smart key is recognized in the area of 28~40 in. (0.7~1 m) from the front outside door handle, other people can also open the doors without possession of the smart key.

## ✻ NOTICE

**You can change the system to unlock all doors by pushing the button once in the driver's outside door handle. If you want this feature (central door unlock mode), perform the following:**

***Unlock mode conversion (two stage unlock mode ↔ central door unlock mode) (if equipped)***

**The unlock mode is changed alternately by pressing the lock button and unlock button on the smart key at the same time for 4 seconds or more. The hazard warning lights will blink four times to indicate that the mode conversion is completed.**

D040103ABH-EU

### *Trunk unlocking*

When all doors are locked if you are within 0.7~1 m (28~40 in.) from the outside trunk handle, with your smart key in your possession, the trunk will unlock when you press the trunk handle switch.

The hazard warning lights will blink twice to indicate that the trunk is unlocked.

Also, once the trunk is opened and then closed, the trunk will be locked automatically.

D040104ABH

### *Start-up*

You can start the engine without inserting the key. For detailed information refer to the "Engine start/stop button" in section 5.

D040300AEN-EU

## Smart key precautions

### ✻ NOTICE

- **If, for some reason, you happen to lose your smart key, you will not be able to start the engine. Tow the vehicle, if necessary, and contact an authorized HYUNDAI dealer.**
- **A maximum of 2 smart keys can be registered to a single vehicle. If you lose a smart key, you should immediately take the vehicle and key to your authorized HYUNDAI dealer to protect it from potential theft.**
- **The smart key will not work if any of following occur:**
  - **The smart key is close to a radio transmitter such as a radio station or an airport which can interfere with normal operation of the smart key.**
  - **You keep the smart key near a mobile two-way radio system or a cellular phone.**
  - **Another vehicle's smart key is being operated close to your vehicle.**

  **When the smart key does not work correctly, open and close the door with the mechanical key. If you have a problem with the smart key, contact an authorized HYUNDAI dealer.**

### ⚠ CAUTION

***Keep the smart key away from water or any liquid. If the keyless entry system is inoperative due to exposure to water or other liquids, it will not be covered by your manufacturer's vehicle warranty.***

**This device complies with Part 15 of the FCC rules.**

Operation is subject to the following two conditions:

1. This device may not cause harmful interference, and
2. This device must accept any interference received, including interference that may cause undesired operation.

### ⚠ WARNING

**Changes or modifications not expressly approved by the party responsible for compliance could void the user's authority to operate the equipment. If the keyless entry system is inoperative due to changes or modifications not expressly approved by the party responsible for compliance, it will not be covered by your manufacturer's vehicle warranty.**

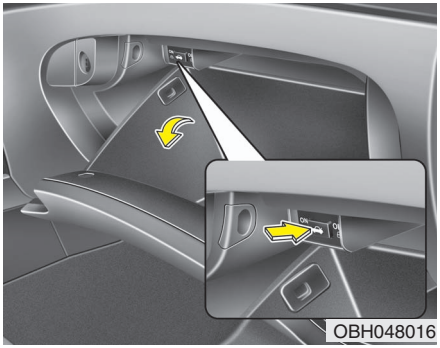


D040600ABH

## Trunk lock system

The trunk lid control button located in the vehicle glove box is used to prevent unauthorized access to the trunk.

### Trunk locking

To activate the trunk lock system so that the trunk can only be opened with the mechanical key, perform the following:

1. Depress and hold the release button (1) and remove the mechanical key (2). (To reinstall the mechanical key, put the key into the hole and push it until a click sound is heard.)
2. Open the glove box.
3. Set the trunk lid control button to OFF position (not depressed).
4. Close and lock the glove box using the mechanical key.

When leaving your keys with a parking lot attendant or valet, perform steps 1 to 4 above, remove the mechanical key from the smart key and leave the smart key with the attendant. In this manner the smart key can only be used to start the engine and operate door locks.

### Lock release

To release the trunk lock feature, open the glove box with the mechanical key and set the trunk lid control button to ON position (depressed). In this position the trunk will open with the trunk lid release lever or smart key.

D040500BBH

### Battery replacement

A smart key battery should last for several years, but if the smart key is not working properly, try replacing the battery with a new one. If you are unsure how to use your smart key or replace the battery, contact an authorized HYUNDAI dealer.

### ✻ NOTICE

**The circuit inside the smart key can have a problem if exposed to moisture or static electricity. If you are unsure how to use your smart key or replace the battery, contact an authorized HYUNDAI dealer.**

1. Pry open the rear cover of the smart key.
2. Replace the battery with a new battery (CR2032). When replacing the battery, make sure the battery positive "+" symbol faces up as indicated in the illustration.
3. Install the battery in the reverse order of removal.

### ✻ NOTICE

- **Using the wrong battery can cause the smart key to malfunction. Be sure to use the correct battery.**
- **Circuits inside the smart key may develop problems when dropped, exposed to moisture or static electricity.**
- **If you suspect that your smart key might have sustained some damage, or you feel your smart key is not working correctly, contact an authorized HYUNDAI dealer.**

### ⚠ WARNING

**An inappropriately disposed battery can be harmful to the environment and human health.**

**Dispose the battery according to your local law(s) or regulation.**

## REMOTE KEYLESS ENTRY

OBH048207

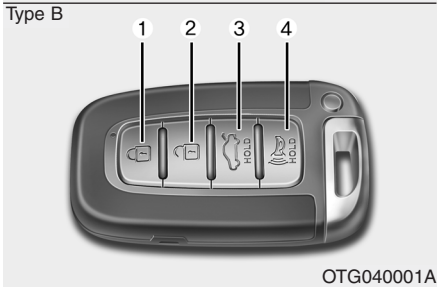


OTG040001A

### Remote keyless entry system operations

D020101ABH-EU

***Lock (1)***

All doors (and trunk) are locked if the lock button is pressed.

The hazard warning lights blink and the chime sounds once to indicate that all doors (and trunk) are locked.

However, if any door (or trunk) remains open, the hazard warning lights and the chime will not operate. If all doors (and trunk) are closed after the lock button is pressed, the hazard warning lights blink.

D020102ABH-EU

***Unlock (2)***

The driver's door is unlocked if the unlock button is pressed once. The hazard warning lights will blink twice to indicate that the driver's door is unlocked.

All doors (and trunk) are unlocked if the unlock button is pressed once more within 4 seconds. The hazard warning lights will blink and the chime will sound twice again to indicate that all doors (and trunk) are unlocked.

After depressing this button, the doors (and trunk) will be locked automatically unless you open any door within 30 seconds.

### ✻ NOTICE

**You can change the system to unlock all doors by pressing the unlock button once on the smart key. If you want this feature (central door unlock mode), perform the following:**

***Unlock mode conversion (two stage unlock mode ↔ central door unlock mode) - smart key only (if equipped)***

**The unlock mode is changed alternately by pressing the lock button and unlock button on the smart key at the same time for 4 seconds or more. The hazard warning lights will blink four times to indicate that the mode conversion is completed.**

D020104BBH-EU

***Trunk unlock (3)***

The trunk is unlocked if the button is pressed for more than 1 second when all doors are locked.

The hazard warning lights will blink twice to indicate that the trunk is unlocked.

Also, once the trunk is opened and then closed, the trunk will be locked automatically.

D020105ABH

### *Alarm (4)*

The horn sounds and hazard warning lights flash for about 30 seconds if this button is pressed for more than 0.5 second. To stop the horn and lights, press any button on the transmitter (or the smart key).

D020200AEN-EU

## Transmitter precautions

### ✻ NOTICE

**The transmitter will not work if any of following occur:**

- **The ignition key is in ignition switch.**
- **You exceed the operating distance limit (about 90 feet [30 m]).**
- **The battery in the transmitter is weak.**
- **Other vehicles or objects may be blocking the signal.**
- **The weather is extremely cold.**
- **The transmitter is close to a radio transmitter such as a radio station or an airport which can interfere with normal operation of the transmitter.**

**When the transmitter does not work correctly, open and close the door with the ignition key. If you have a problem with the transmitter, contact an authorized HYUNDAI dealer.**

### ⚠ CAUTION

***Keep the transmitter away from water or any liquid. If the keyless entry system is inoperative due to exposure to water or liquids, it will not be covered by your manufacturer's vehicle warranty.***

**This device complies with Part 15 of the FCC rules.**

Operation is subject to the following two conditions:

1. This device may not cause harmful interference, and
2. This device must accept any interference received, including interference that may cause undesired operation.

### ⚠ WARNING

**Changes or modifications not expressly approved by the party responsible for compliance could void the user's authority to operate the equipment. If the keyless entry system is inoperative due to changes or modifications not expressly approved by the party responsible for compliance, it will not be covered by your manufacturer's vehicle warranty.**

D020300BBH

## Battery replacement

The transmitter uses a 3 volt lithium battery which will normally last for several years. When replacement is necessary, use the following procedure.

1. Insert a slim tool into the slot and gently pry open the transmitter center cover.
2. Replace the battery with a new battery (CR2032). When replacing the battery, make sure the battery positive "+" symbol faces up.
3. Install the battery in the reverse order of removal.

For replacement transmitters, see an authorized HYUNDAI dealer for transmitter reprogramming.

### ⚠ CAUTION

- ***The keyless entry system transmitter is designed to give you years of trouble-free use, however it can malfunction if exposed to moisture or static electricity. If you are unsure how to use your transmitter or replace the battery, contact an authorized HYUNDAI dealer.***
- ***Using the wrong battery can cause the transmitter to malfunction. Be sure to use the correct battery.***
- ***To avoid damaging the transmitter, don't drop it, get it wet, or expose it to heat or sunlight.***

### ⚠ WARNING

**An inappropriately disposed battery can be harmful to the environment and human health.**

**Dispose the battery according to your local law(s) or regulation.**

## THEFT-ALARM SYSTEM

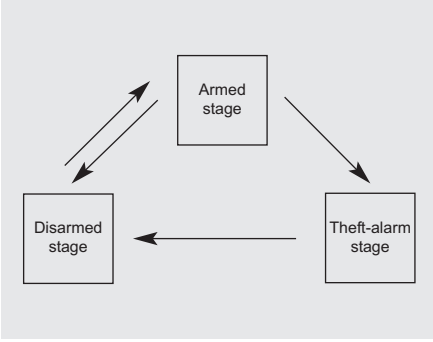


D030000AEN

This system is designed to provide protection from unauthorized entry into the car. This system is operated in three stages: the first is the "Armed" stage, the second is the "Theft-alarm" stage, and the third is the "Disarmed" stage. If triggered, the system provides an audible alarm with blinking of the hazard warning lights.

D030100BBH

### Armed stage

Park the car and stop the engine. Arm the system as described below.

1. Remove the ignition key from the ignition switch or turn off the engine.
2. Make sure that all doors, the engine hood and trunk lid are closed and latched.
3. • Lock the doors by depressing the door lock button on the transmitter (or smart key).

   After completion of the steps above, the hazard warning lights will blink once to indicate that the system is armed.

   If any door, trunk lid or engine hood remains open, the hazard warning lights won't operate and theft-alarm will not arm. After this, if all doors, trunk lid and engine hood are closed, the hazard warning lights blink once.

   • Lock the doors by pressing the button in the front outside door handles with the smart key in your possession.

   After completion of the steps above, the hazard warning lights will blink once to indicate that the system is armed.

   If any door, trunk lid or engine hood remains open, the hazard warning lights won't operate and theft-alarm will not arm. To arm the system close all the doors, trunk lid and engine hood, and try again to lock the doors.

### ✻ NOTICE

**If you set the vehicle to "key Activates Alarm" in the INFO menu of DIS (Driver Information System, if equipped), the system can also be armed by locking the doors with the key from the front doors; however, the hazard warning lights will not blink using this method.**
**Detailed information is described in the DIS manual supplied separately.**

**Do not arm the system until all passengers have left the vehicle. If the system is armed while a passenger(s) remains in the vehicle, the alarm may be activated when the remaining passenger(s) leave the vehicle. If any door (or trunk) or engine hood is opened within 30 seconds after the system enters the armed stage, the system is disarmed to prevent an unnecessary alarm.**

D030200ABH-EU

### Theft-alarm stage

The alarm will be activated if any of the following occurs while the system is armed.

- A door is opened without using the transmitter (or smart key).
- The trunk is opened without using the transmitter (or smart key).
- The engine hood is opened.

The horn will sound and the hazard warning lights will blink continuously for approximately 30 seconds, and the alarm will repeat once more unless the system is disarmed. To turn off the system, unlock the doors with the ignition key or transmitter.

D020106ABH

### Opening the trunk with the alarm armed (if equipped)

When the alarm is armed, the alarm will not sound if the trunk lid is opened with the transmitter (or the smart key).

Once the trunk is opened and then closed, the trunk will be locked automatically and the system will be armed again.

Also, if any of the doors or hood is opened while the trunk lid open and the alarm armed, the alarm will sound.

D030400ABH-EE

### Disarmed stage

The system will be disarmed when the doors are unlocked with the transmitter (or smart key).

After depressing the unlock button, the hazard warning lights will blink and the chime will sound twice to indicate that the system is disarmed.

After depressing the unlock button, if any door (or trunk) is not opened within 30 seconds, the system will be rearmed.

### ✻ NOTICE

- **Avoid trying to start the engine while the alarm is activated. The vehicle starter motor is disabled during the theft-alarm stage.**
  **If the system is not disarmed with the transmitter, insert the key into the ignition switch, turn the ignition switch to the ON position and wait for 30 seconds. Then the system will be disarmed. (for Canada)**
- **If you lose your keys, consult your authorized HYUNDAI dealer.**

### ⚠ CAUTION

***Do not change, alter or adjust the theft-alarm system because it could cause the theft-alarm system to malfunction. The system should only be serviced by an authorized HYUNDAI dealer.***

***Malfunctions caused by improper alterations, adjustments or modifications to the theft-alarm system are not covered by your vehicle manufacturer warranty.***

## DOOR LOCKS

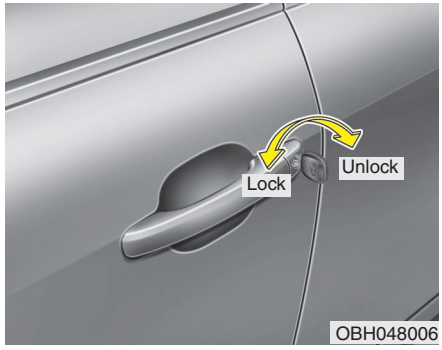


D050100ABH-EU

### Operating door locks from outside the vehicle

- Turn the key toward the rear of the vehicle to unlock and toward the front of the vehicle to lock.
- If you lock the door with a key, all vehicle doors will lock automatically.
- From the driver's door, turn the key to the right once to unlock the driver's door and once more within 4 seconds to unlock all doors.

  If your vehicle is equipped with a smart key, you can change the system to unlock all doors by turning the key to the right once. If you want this feature (central door unlock mode), refer to the "Smart key or Remote keyless entry" in this section.
- Doors can also be locked and unlocked with the transmitter (or smart key).
- Once the doors are unlocked, they may be opened by pulling the door handle.
- When closing the door, push the door by hand. Make sure that doors are closed securely.

### ✻ NOTICE

- **In cold and wet climates, door locks and door mechanisms may not work properly due to freezing conditions.**
- **If the door is locked/unlocked multiple times in rapid succession with either the vehicle key or door lock switch, the system may stop operating temporarily in order to protect the circuit and prevent damage to system components.**

### ⚠ WARNING

- **If you don't close the door securely, the door may open again.**
- **Be careful that someone's body and hands are not trapped when closing the door.**

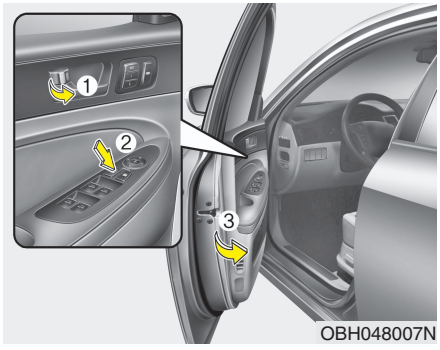


- To lock a door without the key, push the inside door lock button (1) or central door lock switch (2) to the "Lock" position and close the door (3).
- If you lock the door with the central door lock switch (2), all vehicle doors will lock automatically.

### ✻ NOTICE

**Always remove the ignition key, engage the parking brake, close all windows and lock all doors when leaving your vehicle unattended.**

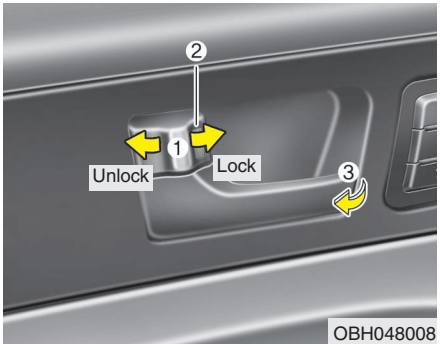

OBH048008

## Operating door locks from inside the vehicle

D050201BBH-EE

### *With the door lock button*

- To unlock a door, push the door lock button (1) to the “Unlock” position. The red mark (2) on the door lock button will be visible.
- To lock a door, push the door lock button (1) to the “Lock” position. If the door is locked properly, the red mark (2) on the door lock button will not be visible.
- To open a door, pull the door handle (3) outward.
- If the inner door handle of the driver’s (or front passenger’s) door is pulled when the door lock button is in lock position, the button is unlocked and door opens.
- Front doors cannot be locked if the ignition key is in the ignition switch (or if the smart key is in the vehicle) and any door is open.

**⚠ WARNING - Door lock malfunction**

**If a power door lock ever fails to function while you are in the vehicle, try one or more of the following techniques to exit:**

- **Operate the door unlock feature repeatedly (both electronic and manual) while simultaneously pulling on the door handle.**
- **Operate the other door locks and handles, front and rear.**
- **Lower a front window and use the key to unlock the door from outside.**

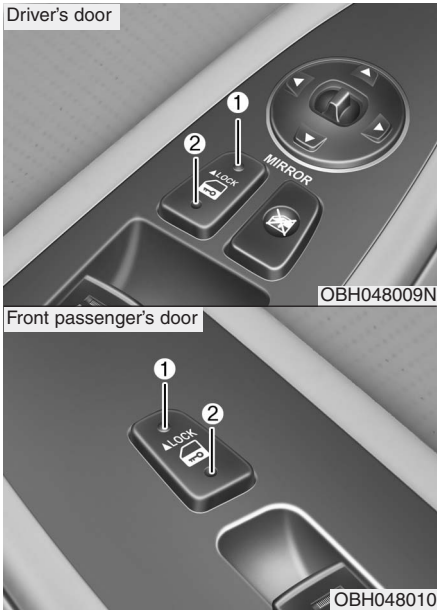


D050202BBH-EU

### *With central door lock switch*

Operate by depressing the central door lock switch.

- When pushing down on the front portion (1) of the switch, all vehicle doors will lock.
- When pushing down on the rear portion (2) of the switch, all vehicle doors will unlock.
- If the key is in the ignition switch or the smart key is in the vehicle, and any door is open, the doors will not lock even though the front portion (1) of central door lock switch is pressed.

**⚠ WARNING - Doors**

- **The doors should always be fully closed and locked while the vehicle is in motion to prevent accidental opening of the door. Locked doors will also discourage potential intruders when the vehicle stops or traveling slowly.**
- **Be careful when opening doors and watch for vehicles, motorcycles, bicycles or pedestrians approaching the vehicle in the path of the door. Opening a door when something is approaching can cause damage or injury.**

**⚠ WARNING - Unlocked vehicles**

**Leaving your vehicle unlocked can invite theft or possible harm to you or others from someone hiding in your vehicle while you are gone. Always remove the ignition key, engage the parking brake, close all windows and lock all doors when leaving your vehicle unattended.**

**⚠ WARNING - Unattended children**

**An enclosed vehicle can become extremely hot, causing death or severe injury to unattended children or animals who cannot escape the vehicle. Furthermore, children might operate features of the vehicle that could injure them, or they could encounter other harm, possibly from someone gaining entry to the vehicle. Never leave children or animals unattended in your vehicle.**

D050300AAM-EE

### Impact sensing door unlock system (if equipped)

In the event of air bag deployment resulting from a vehicle impact, all doors will automatically unlock.

D050400ABH-EU

### Speed sensing door lock system (if equipped)

All doors will be automatically locked when the vehicle speed exceeds 9 mph (15 km/h). And all doors will be automatically unlocked after you turn the engine off or when you remove the ignition key. (if equipped)

## ✻ NOTICE

**You can activate or deactivate some auto door lock/unlock features in the INFO menu of DIS (Driver Information System, if equipped) as follows;**

- **Speed sensing auto door lock**
- **Auto door unlock by unlocking the driver's door**
- **Auto door unlock when the ignition key is removed from the ignition switch or the smart key is removed from the smart key holder.**
- **Auto door lock/unlock by shifting the transmission shift lever out of P (Park) or into P (Park)**

**If you want to activate or deactivate some door lock/unlock feature, refer to the DIS manual (if equipped) supplied separately.**

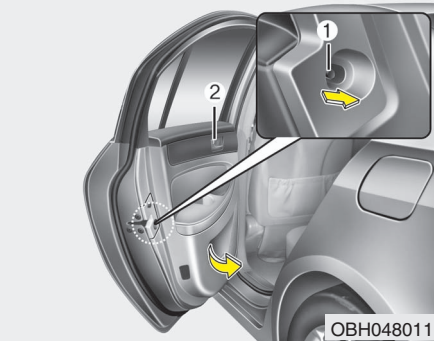


D050500ABH

### Child-protector rear door lock

The child safety lock is provided to help prevent children from accidentally opening the rear doors from inside the vehicle. The rear door safety locks should be used whenever children are in the vehicle.

1. Open the rear door.
2. Push the child safety lock (1) located on the rear edge of the door to the lock ( 🔒 ) position. When the child safety lock is in the lock position, the rear door will not open even when the inner door handle is pulled.
3. Close the rear door.

To open the rear door, pull the outside door handle.

Even though the doors may be unlocked, the rear door will not open by pulling the inner door handle (2) until the rear door child safety lock is unlocked ( 🔓 ).

**⚠ WARNING - Rear door locks**

**If children accidentally open the rear doors while the vehicle is in motion, they could fall out of the vehicle, resulting in severe injury or death. To prevent children from opening the rear doors from the inside, the rear door safety locks should be used whenever children are in the vehicle.**

## TRUNK

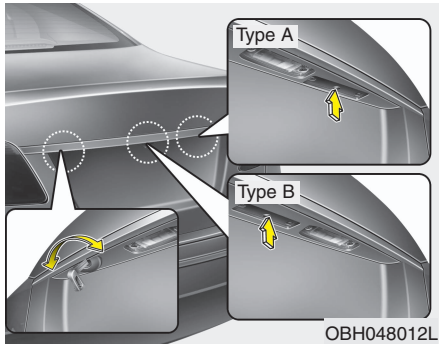


D070100ABH-EE

### Opening the trunk

- The trunk is locked or unlocked when all doors are locked or unlocked with the key, transmitter (or smart key) or central door lock switch.
- To open the trunk only while all doors are locked, press the trunk unlock button for more than 1 second on the transmitter (or smart key), press the button on the trunk handle with the smart key in your possession, or insert the master key (or mechanical key of the smart key) into the lock and turn it clockwise.

  Once the trunk is opened and then closed, the trunk is locked automatically.
- If the trunk is unlocked, it can be opened by pulling the handle up.

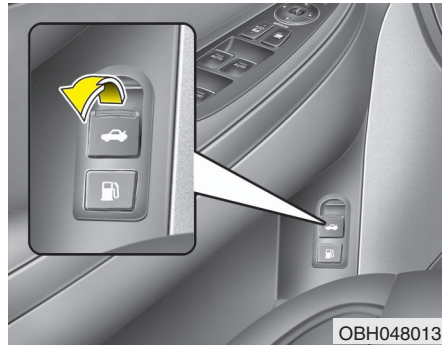


- To open the trunk from inside the vehicle pull the trunk lid release lever.

### ✻ NOTICE

**In cold and wet climates, trunk locks and trunk mechanisms may not work properly due to freezing conditions.**

### ⚠ WARNING

**Make sure no objects or people are near the rear of the vehicle when opening the trunk.**

### ⚠ CAUTION

***Make certain that you close the trunk before driving your vehicle. Possible damage may occur to the trunk lift cylinders and attached hardware if the trunk is not closed prior to driving.***

D070200ABH

## Closing the trunk

To close, lower the trunk lid, then press down on it until it locks. To be sure the trunk lid is securely fastened, always check by trying to pull it up.

**⚠ WARNING**

**The trunk lid should be always kept completely closed while the vehicle is in motion. If it is left open or ajar, poisonous exhaust gases may enter the car and serious illness or death may result.**

OBH048014

D070300ABH

## Emergency trunk safety release

Your vehicle is equipped with an emergency trunk release cable located inside the trunk. The lever glows in the dark when the trunk lid is closed. If someone is inadvertently locked in the trunk, pulling this handle will release the trunk latch mechanism and open the trunk.

**⚠ WARNING**

- **No one should be allowed to occupy the trunk of the vehicle at any time. If the trunk is partially or totally latched and the person is unable to get out, severe injury or death could occur due to lack of ventilation, exhaust fumes and rapid heat build-up, or because of exposure to cold weather conditions. The trunk is also a highly dangerous location in the event of a crash because it is not a protected occupant space but is a part of the vehicle's crush zone.**
- **Your vehicle should be kept locked and keys be kept out of the reach of children. Parents should teach their children about the dangers of playing in trunks.**

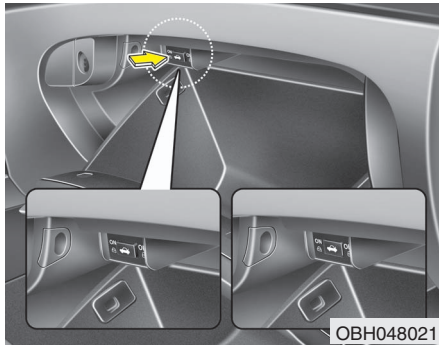


D070403ABH-EU

### Trunk lid control button

The trunk lid control button located in the vehicle glove box is used to prevent unauthorized access to the trunk.

- When the trunk lid control button is ON (depressed), the trunk can be unlocked with the trunk lid release lever and the transmitter (or smart key).
- When the trunk lid control button is OFF (not depressed), the trunk can be unlocked with the master key (or the mechanical key of the smart key) only.

### ✻ NOTICE

**Close the trunk, and keep the trunk lid control button in the OFF (not depressed) position before washing the vehicle in an automatic car wash.**

## WINDOWS

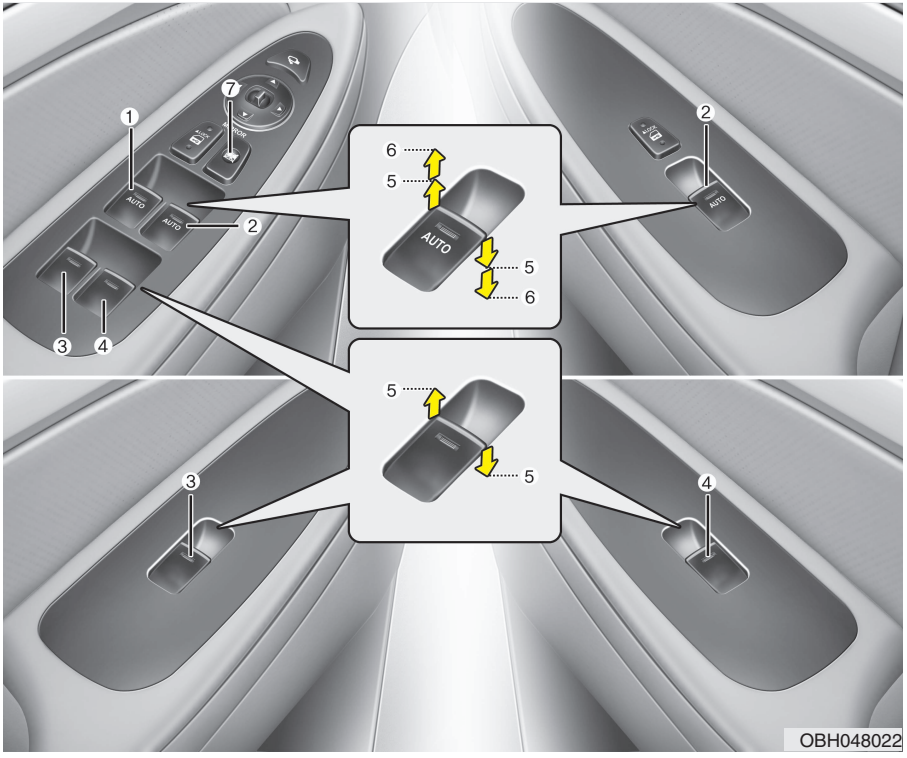


D080000AEN

(1) Driver's door power window switch
(2) Front passenger's door power window switch
(3) Rear door (left) power window switch
(4) Rear door (right) power window switch
(5) Window opening and closing
(6) Automatic power window up/down (if equipped)
(7) Power window lock switch

### ✻ NOTICE

**In cold and wet climates, power windows may not work properly due to freezing conditions.**

D080100BBH

## Power windows

The ignition switch must be in the ON position for power windows to operate.

Each door has a power window switch that controls the door's window. The driver has a power window lock switch which can block the operation of passenger windows. The power windows can be operated for approximately 30 seconds after the ignition key is removed or turned to the ACC or LOCK position. However, if the front doors open, the power windows cannot be operated within the 30 second period after ignition key removal.

### ✻ NOTICE

**While driving with the rear windows down or with the sunroof (if equipped) in an open (or partially open) position, your vehicle may demonstrate a wind buffeting or pulsation noise. This noise is a normal occurrence and can be reduced or eliminated by taking the following actions. If the noise occurs with one or both of the rear windows down, partially lower both front windows approximately one inch. If you experience the noise with the sunroof open, slightly reduce the size of the sunroof opening.**

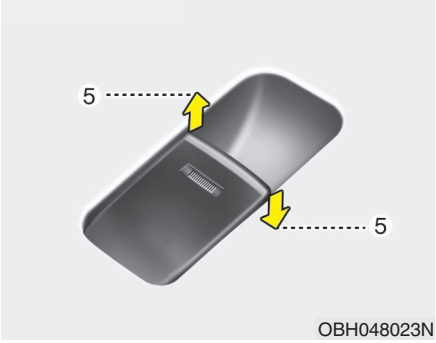


D080101AUN

### *Window opening and closing*

The driver's door has a master power window switch that controls all the windows in the vehicle.

To open or close a window, press down or pull up the front portion of the corresponding switch to the first detent position (5).

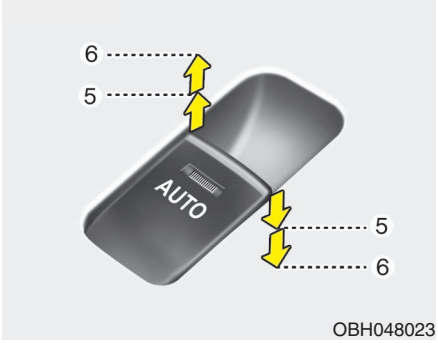


D080103ABH-EU

### *Auto up/down window (if equipped)*

Depressing or pulling up the power window switch momentarily to the second detent position (6) completely lowers or lifts the window even when the switch is released. To stop the window at the desired position while the window is in operation, momentarily pull the switch in the direction opposite of the window's movement.

If the power window is not operated correctly, the automatic power window system must be reset as follows:

1. Turn the ignition switch to the ON position.
2. Close the driver's and front passenger's windows and continue pulling up on the power window switch for at least 1 second after the window is completely closed.

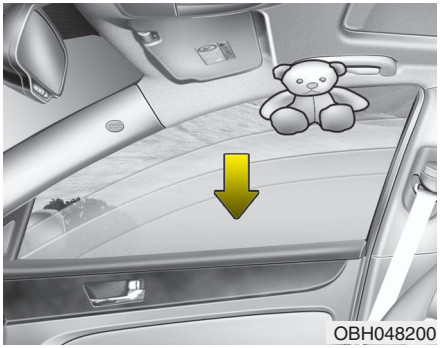


**Automatic reversal**

If the upward movement of the window is blocked by an object or part of the body, the window will detect the resistance and will stop upward movement. The window will then lower approximately 11.8 in. (30 cm) to allow the object to be cleared.

If the window detects the resistance while the power window switch is pulled up continuously, the window will stop upward movement then lower approximately 1 in. (2.5 cm). And if the power window switch is pulled up continuously again within 5 seconds after the window is lowered by the automatic window reversal feature, the automatic window reversal will not operate.

### ✻ NOTICE

**The automatic reverse feature for the driver's and front passenger's windows are only active when the "auto up" feature is used by fully pulling up the switch. The automatic reverse feature will not operate if the window is raised using the halfway position on the power window switch.**

### ⚠ WARNING

**Always check for obstructions before raising any window to avoid injuries or vehicle damage. If an object less than 0.16 in. (4 mm) in diameter is caught between the window glass and the upper window channel, the automatic reverse window may not detect the resistance and will not stop and reverse direction.**

D080104AUN

***Power window lock button***

- The driver can disable the power window switches on the passenger doors by depressing the power window lock switch located on the driver's door to LOCK (pressed).
- **When the power window lock switch is ON, the driver's master control cannot operate the passenger door power windows.**

## ⚠ CAUTION

- ***To prevent possible damage to the power window system, do not open or close two windows or more at the same time. This will also ensure the longevity of the fuse.***
- ***Never try to operate the main switch on the driver's door and the individual door window switch in opposing directions at the same time. If this is done, the window will stop and cannot be opened or closed.***

## ⚠ WARNING - Windows

- **NEVER leave the ignition key (or smart key) in the vehicle.**
- **NEVER leave any child unattended in the vehicle. Even very young children may inadvertently cause the vehicle to move, entangle themselves in the windows, or otherwise injure themselves or others.**
- **Always double check to make sure all arms, hands, head and other obstructions are safely out of the way before closing a window.**
- **Do not allow children to play with the power windows. Keep the driver's door power window lock switch in the LOCK position (depressed). Serious injury can result from unintentional window operation by the child.**
- **Do not extend any head or arms outside through the window opening while driving.**

## HOOD

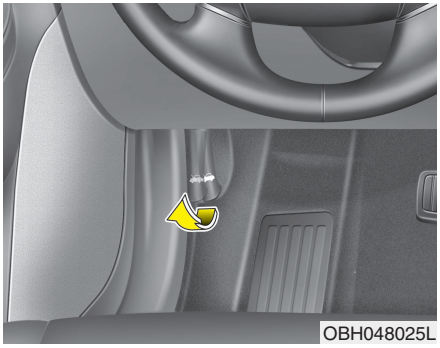


D090100AEN

### Opening the hood

1. Pull the release lever to unlatch the hood. The hood should pop open slightly.

**⚠ WARNING**

**Open the hood after turning off the engine on a flat surface, shifting the shift lever to the P(Park) position, and setting the parking brake.**

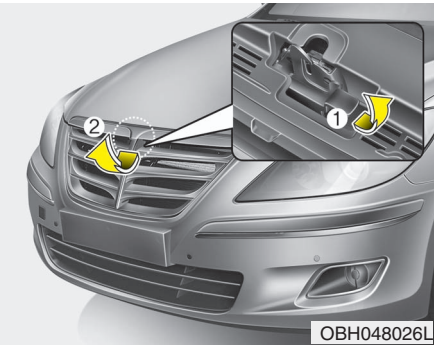


2. Go to the front of the vehicle, raise the hood slightly, pull the secondary latch (1) inside of the hood center and lift the hood (2).
3. Raise the hood. It will raise completely by itself after it has been raised about halfway.

D090200AEN

### Closing the hood

1. Before closing the hood, check the following:
   - All filler caps in engine compartment must be correctly installed.
   - Gloves, rags or any other combustible material must be removed from the engine compartment.
2. Lower the hood halfway and push down to securely lock in place.

**⚠ WARNING**

- **Before closing the hood, ensure that all obstructions are removed from the hood opening. Closing the hood with an obstruction present in the hood opening may result in property damage or severe personal injury.**
- **Do not leave gloves, rags or any other combustible material in the engine compartment. Doing so may cause a heat-induced fire.**
- **Always double check to be sure that the hood is firmly latched before driving away. If it is not latched, the hood could open while the vehicle is being driven, causing a total loss of visibility, which might result in an accident.**
- **Do not move the vehicle with the hood in the raised position, as vision is obstructed and the hood could fall or be damaged.**

## FUEL FILLER LID

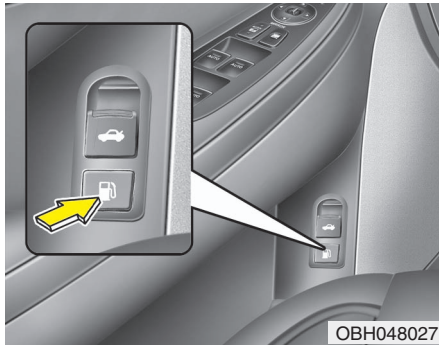


D100100AUN

### Opening the fuel filler lid

The fuel filler lid must be opened from inside the vehicle by pushing the fuel filler lid opener button located on the driver's door.

### ✻ NOTICE

**If the fuel filler lid will not open because ice has formed around it, tap lightly or push on the lid to break the ice and release the lid. Do not pry on the lid. If necessary, spray around the lid with an approved de-icer fluid (do not use radiator anti-freeze) or move the vehicle to a warm place and allow the ice to melt.**

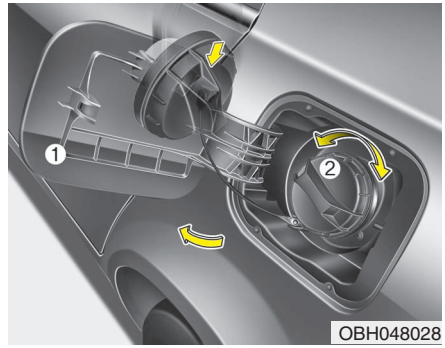


1. Stop the engine.
2. To open the fuel filler lid, push the fuel filler lid opener button.
3. Pull the fuel filler lid (1) out to fully open.
4. To remove the cap, turn the fuel tank cap (2) counterclockwise.
5. Refuel as needed.

D100200AUN

### Closing the fuel filler lid

1. To install the cap, turn it clockwise until it "clicks" one time. This indicates that the cap is securely tightened.
2. Close the fuel filler lid and push it in lightly making sure that it is securely closed.

D100300ABH-EU

### ⚠ WARNING - Refueling

- **If pressurized fuel sprays out, it can cover your clothes or skin and thus subject you to the risk of fire and burns. Always remove the fuel cap carefully and slowly. If the cap is venting fuel or if you hear a hissing sound, wait until the condition stops before completely removing the cap.**
- **Do not "top off" after the nozzle automatically shuts off when refueling.**
- **Tighten the cap until it clicks one time, otherwise the Malfunction Indicator Light will illuminate.**
- **Always check that the fuel cap is installed securely to prevent fuel spillage in the event of an accident.**

**⚠ WARNING - Refueling dangers**

**Automotive fuels are flammable materials. When refueling, please note the following guidelines carefully. Failure to follow these guidelines may result in severe personal injury, severe burns or death by fire or explosion.**

- **Read and follow all warnings posted at the gas station facility.**
- **Before refueling, note the location of the Emergency Gasoline Shut-Off, if available, at the gas station facility.**
- **Before touching the fuel nozzle, you should eliminate potentially dangerous static electricity discharge by touching another metal part of the vehicle, a safe distance away from the fuel filler neck, nozzle, or other gas source.**

**(Continued)**

**(Continued)**

- **Do not get back into a vehicle once you have begun refueling since you can generate static electricity by touching, rubbing or sliding against any item or fabric (polyester, satin, nylon, etc.) capable of producing static electricity. Static electricity discharge can ignite fuel vapors resulting in rapid burning. If you must re-enter the vehicle, you should once again eliminate potentially dangerous static electricity discharge by touching a metal part of the vehicle, away from the fuel filler neck, nozzle or other gasoline source.**
- **When using an approved portable fuel container, be sure to place the container on the ground prior to refueling. Static electricity discharge from the container can ignite fuel vapors causing a fire. Once refueling has begun, contact with the vehicle should be maintained until the filling is complete. Use only approved portable plastic fuel containers designed to carry and store gasoline.**

**(Continued)**

**(Continued)**

- **Do not use cellular phones while refueling. Electric current and/or electronic interference from cellular phones can potentially ignite fuel vapors causing a fire.**
- **When refueling, always shut the engine off. Sparks produced by electrical components related to the engine can ignite fuel vapors causing a fire. Once refueling is complete, check to make sure the filler cap and filler door are securely closed, before starting the engine.**
- **DO NOT use matches or a lighter and DO NOT SMOKE or leave a lit cigarette in your vehicle while at a gas station especially during refueling. Automotive fuel is highly flammable and can, when ignited, result in fire.**
- **If a fire breaks out during refueling, leave the vicinity of the vehicle, and immediately contact the manager of the gas station and then contact the local fire department or 911. Follow any safety instructions they provide.**

⚠ **CAUTION**

- ***Make sure to refuel your vehicle according to the "Fuel requirements" suggested in section 1.***
- ***If the fuel filler cap requires replacement, use only a genuine HYUNDAI cap or the equivalent specified for your vehicle. An incorrect fuel filler cap can result in a serious malfunction of the fuel system or emission control system.***
- ***Do not spill fuel on the exterior surfaces of the vehicle. Any type of fuel spilled on painted surfaces may damage the paint.***
- ***After refueling, make sure the fuel cap is installed securely to prevent fuel spillage in the event of an accident.***

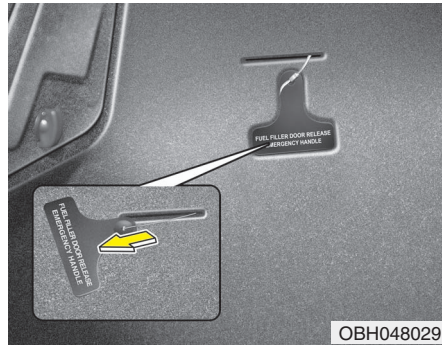


D100500ABH

## Emergency fuel filler lid release

An emergency fuel filler lid release is located in the luggage compartment, on the left side.

If the fuel filler lid does not open using the remote fuel filler lid release, you can open it manually. Pull the handle outward slightly.

⚠ **CAUTION**

***Do not pull the handle excessively, otherwise the luggage area trim or release handle may be damaged.***

## SUNROOF (IF EQUIPPED)

OBH048030N

D110000AEN

If your vehicle is equipped with a sunroof, you can slide or tilt your sunroof with the sunroof control lever located on the overhead console.

The sunroof can only be opened, closed, or tilted when the ignition switch is in the ON position.

### ✻ NOTICE

- **In cold and wet climates, the sunroof may not work properly due to freezing conditions.**
- **After washing the car or after there is rain, be sure to wipe off any water that is on the sunroof before operating it.**

### ⚠ CAUTION

***Do not continue to move the sunroof control lever after the sunroof is in the fully open, closed, or tilt position(s). Damage to the motor or system components could occur.***

### ✻ NOTICE

**The sunroof cannot slide when it is in the tilt position nor can it be tilted while in an open or slide position.**

### ⚠ WARNING

**Never adjust the sunroof or sunshade while driving. This could result in loss of control and an accident that may cause death, serious injury, or property damage.**

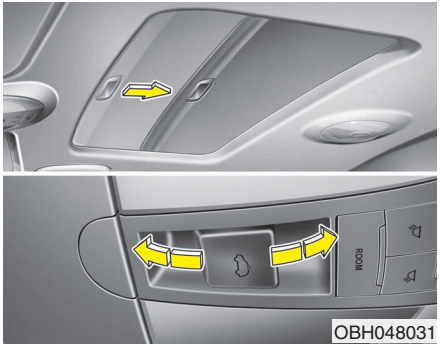

OBH048031

D110100AEN

### Sliding the sunroof

To open or close the sunroof (manual slide feature), pull or push the sunroof control lever backward or forward to the first detent position.

Pulling the control lever downward also closes the sunroof.

To open or close the sunroof completely even when the lever is released (auto slide feature), pull or push the sunroof control lever backward or forward to the second detent position. The sunroof will slide all the way open or closed. To stop the sunroof sliding at any point, pull or push the sunroof control lever momentarily in the opposite direction of sunroof movement.

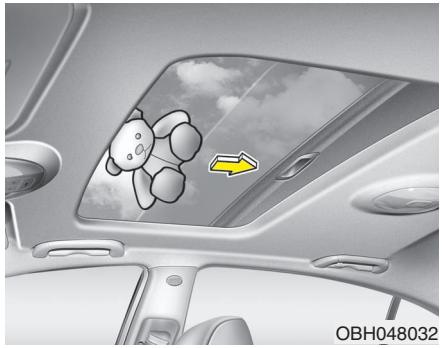


D110101AEN

***Automatic reversal***

If an object is detected while the sunroof is closing automatically, it will reverse direction, and then stop.

The auto reverse function does not work if a small obstacle is between the sliding glass and the sunroof sash. You should always check that all passengers and objects are away from the sunroof before closing it.

D110200BBH

## Tilting the sunroof

To open the sunroof (autotilt feature), push the sunroof control lever upward to the second detent. The sunroof will tilt all the way open. To stop the sunroof tilting at any point, operate the control lever.

To close the sunroof, pull the sunroof lever downward until the sunroof moves to the desired position.

**⚠ WARNING - Sunroof**

- **Be careful that no heads, hands and body parts are obstructing a closing sunroof.**
- **Do not extend the face, neck, arms or body outside the sunroof while driving.**
- **Make sure your hands and head are safely out of the way before closing a sunroof.**

**⚠ CAUTION**

- ***Periodically remove any dirt that may accumulate on the guide rail.***
- ***If you try to open the sunroof when the temperature is below freezing or when the sunroof is covered with snow or ice, the glass or the motor could be damaged.***
- ***While using the sunroof for a long time, dust that collects between sunroof and the roof panel can cause noise. Open the sunroof and regularly remove the dust using clean cloth.***

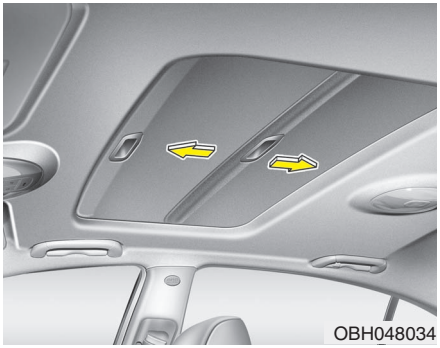


D110300ABH

## Sunshade

The sunshade will automatically open with the glass panel when the glass panel slides open. Close it manually if you want it closed.

**⚠ CAUTION**

***The sunroof is made to slide together with the sunshade. Do not leave the sunshade closed while the sunroof is open.***

D110500BBH

## Resetting the sunroof

Whenever the vehicle battery is disconnected or discharged, or related fuse is blown, you must reset your sunroof system as follows:

1. Turn the ignition switch to the ON position and close the sunroof completely.
2. Release the control lever.
3. Pull and hold the control lever downward until the sunroof tilts and slightly moves up and down. Then, release the lever.
4. Pull and hold the control lever downward until the sunroof is operated as follows;

   TILT DOWN → SLIDE OPEN → SLIDE CLOSE

   Then, release the control lever.

When this is complete, the sunroof system is reset.

❈ For more detailed information, contact an authorized HYUNDAI dealer.

**⚠ CAUTION**

***If the sunroof is not reset when the vehicle battery is disconnected or discharged, or related fuse is blown, the sunroof may operate improperly.***

## DRIVER POSITION MEMORY SYSTEM (IF EQUIPPED)

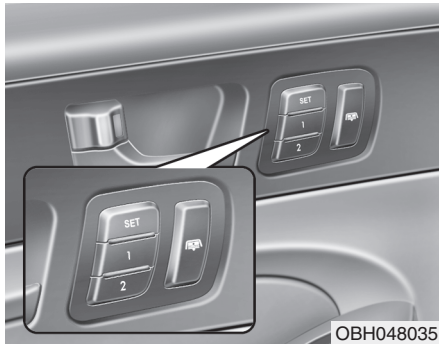

OBH048035

D120000AEN

A driver position memory system is provided to store and recall the driver seat, outside rearview mirror and steering wheel positions with a simple button operation. By saving the desired positions into the system memory, different drivers can reposition the driver seat, outside rearview mirror and steering wheel based upon their driving preference. If the battery is disconnected, the position memory will be lost and the driving positions should be restored in the system.

### ✻ NOTICE

**The buzzer sounds 10 times if there is a malfunction of the memory system. Have the driver position memory system checked by an authorized HYUNDAI dealer.**

### ⚠ WARNING

- **Never attempt to operate the driver position memory system while the vehicle is moving.**
  **This could result in loss of control, and an accident causing death, serious injury, or property damage.**
- **Do not adjust the seat while wearing seat belts. Moving the seat cushion forward may cause strong pressure on the abdomen.**

### Storing positions into memory using the buttons on the door

D120101ABH

***Storing driver's seat positions***

1. Shift the shift lever into P while the ignition switch is ON.
2. Adjust the driver seat, outside rearview mirror and steering wheel to positions comfortable for the driver.
3. Press SET button on the control panel. The system will beep once.
4. Press one of the memory buttons (1 or 2) within 5 seconds after pressing the SET button. The system will beep twice when memory has been successfully stored.

D120102ABH

### *Recalling positions from memory*

1. Shift the shift lever into P while the ignition switch is ON.
2. To recall the position in memory, press the desired memory button (1 or 2). The system will beep once, then the driver seat, outside rearview mirror and steering wheel will automatically adjust to the stored positions.

Adjusting one of the control knobs for the driver seat, outside rearview mirror and steering wheel while the system is recalling the stored positions will cause the movement for that component to stop and move in the direction that the control knob is moved. Other components will continue to the recalled position.

**⚠ WARNING**

**Use caution when recalling adjustment memory while sitting in the vehicle. Push the seat position control knob to the desired position immediately if the seat moves too far in any direction.**

D120300BBH

## Easy access function (if equipped)

With the shift lever in the P position, the system will move the steering wheel upward and driver's seat rearward automatically so you can comfortably enter and exit the vehicle.

- Without smart key system
  - It will move the steering wheel away from the driver and the driver's seat rearward when the ignition key is removed.
  - It will move the steering wheel toward the driver and the driver's seat forward when the ignition key is inserted.
- With smart key system
  - It will move the steering wheel away from the driver and the driver's seat rearward when the engine start/stop button is turned to the OFF position or the smart key is removed from the smart key holder with engine start/stop button in OFF position.
  - It will move the steering wheel toward the driver and the driver's seat forward when the engine start/stop button is turned to the ACC position or the smart key is inserted to the smart key holder with engine start/stop button in OFF position.

**✻ NOTICE**

**You can activate or deactivate the easy access function in the INFO menu of DIS (Driver Information System, if equipped) as follows;**

- **Seat easy access**
- **Steering easy access**

**If you want detailed informations, refer to the DIS manual supplied separately.**

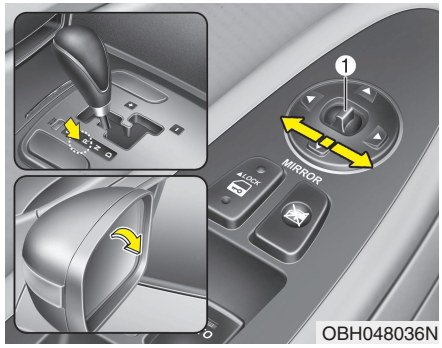


D120400BBH

## Reverse parking aid function (if equipped)

When you shift the shift lever to the R (Reverse) position, the outside rearview mirror(s) will move downward to aid reverse parking. According to the position of the outside rearview mirror switch (1), the outside rearview mirror(s) will operate as follows:

**Left/Right** : When the remote control outside rearview mirror switch is selected to the left/right position, both outside rearview mirrors will move downward.

**Neutral** : When the remote control outside rearview mirror switch is placed in the middle position, the outside rearview mirrors will not operate.

### ✻ NOTICE

**The outside rearview mirrors will automatically revert to their original positions under the following conditions:**

1. **Ignition switch is turned to the LOCK or ACC position.**
2. **Shift lever is moved to any position except R.**
3. **Remote control outside rearview mirror switch is placed in the middle position.**

# STEERING WHEEL

D130100ABH

## Power steering

Power steering uses energy from the engine to assist you in steering the vehicle. If the engine is off or if the power steering system becomes inoperative, the vehicle may still be steered, but it will require increased steering effort.

Should you notice any change in the effort required to steer during normal vehicle operation, have the power steering checked by an authorized HYUNDAI dealer.

### *Electronic Hydraulic Power Steering (EHPS) (if equipped)*

EHPS uses an electromotor to assist you in steering the vehicle. It senses the vehicle speed and road condition.

If the engine is off or if the power steering system becomes inoperative, the vehicle may still be steered, but it will require increased steering effort.

Should you notice any change in the effort required to steer during normal vehicle operation, have the power steering checked by an authorized HYUNDAI dealer.

**⚠ CAUTION**

***Never hold the steering wheel against a stop (extreme right or left turn) for more than 5 seconds with the engine running. Holding the steering wheel for more than 5 seconds in either position may cause damage to the power steering pump.***

**✻ NOTICE**

**If the power steering drive belt breaks or if the power steering pump malfunctions, the steering effort will greatly increase.**

**✻ NOTICE**

**If the vehicle is parked for extended periods outside in cold weather (below 14°F/-10°C), the power steering may require increased effort when the engine is first started. This is caused by increased fluid viscosity due to the cold weather and does not indicate a malfunction.**
**When this happens, increase the engine RPM by depressing accelerator until the RPM reaches 1,500 rpm then release or let the engine idle for two or three minutes to warm up the fluid.**

D130300AEN

## Tilt steering/Telescope steering (if equipped)

Tilt steering allows you to adjust the steering wheel before you drive. You can also raise the steering wheel to give your legs more room when you exit and enter the vehicle.

The steering wheel should be positioned so that it is comfortable for you to drive, while permitting you to see the instrument panel warning lights and gauges.

**⚠ WARNING**

- **Never adjust the angle of the steering wheel while driving. You may lose steering control and cause severe personal injury, death or accidents.**
- **After adjusting, push the steering wheel both up and down to be certain it is locked in position.**

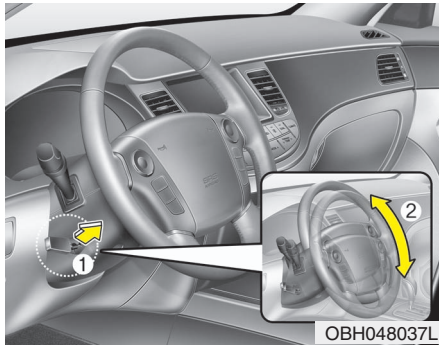


D130301ABH

***Manual type***

To change the steering wheel angle, pull up the lock-release lever (1), adjust the steering wheel to the desired angle (2), then pull down the lock-release lever to lock the steering wheel in place. Be sure to adjust the steering wheel to the desired position before driving.

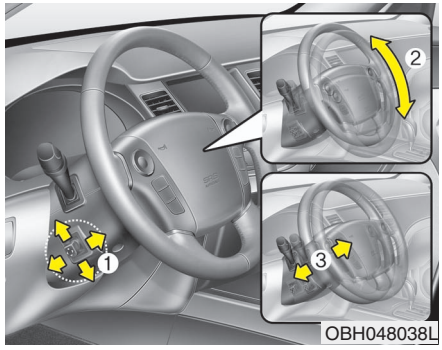


D130302ABH

***Electric type***

Adjust the steering wheel angle (2) and position (3) with the knob (1). Never adjust the position of the steering wheel while driving.

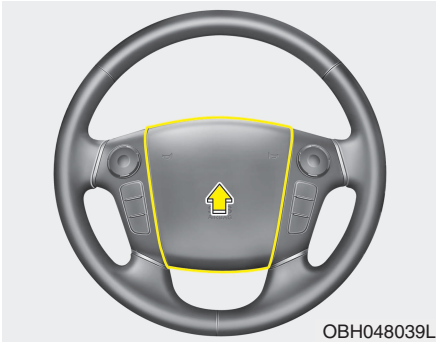


D130500AUN

## Horn

To sound the horn, press the horn symbol on the steering wheel.

Check the horn regularly to be sure it operates properly.

### ✻ NOTICE

**To sound the horn, press the area indicated by the horn symbol on the steering wheel (see illustration). The horn will operate only when this area is pressed.**

### ⚠ CAUTION

***Do not strike the horn severely to operate it, or hit it with your fist. Do not press on the horn with a sharp-pointed object.***

# MIRRORS

D140100AUN

## Inside rearview mirror

Adjust the rearview mirror to center on the view through the rear window. Make this adjustment before you start driving.

**⚠ WARNING - Rear visibility**

**Do not place objects in the rear seat, cargo area or rear package tray which would interfere with your vision through the rear window.**

**⚠ WARNING**

**Do not modify the inside mirror and do not install a wide mirror. It could result in injury, during an accident or deployment of the air bag.**

D140105AEN

### *Electric chromic mirror (ECM) with HomeLink® system and compass (if equipped)*

Your vehicle may be equipped with a Gentex Automatic-Dimming Mirror with a Z-Nav™ Electronic Compass Display and an Integrated HomeLink® Wireless Control System. During nighttime driving, this feature will automatically detect and reduce rearview mirror glare while the compass indicates the direction the vehicle is pointed. The HomeLink® Universal Transceiver allows you to activate your garage door(s), electric gate, home lighting, etc.

(1) Channel 1 button
(2) Channel 2 button
(3) Status indicator LED
(4) Channel 3 button
(5) Rear light sensor
(6) Dimming ON/OFF button
(7) Compass control button
(8) Compass display

**Automatic-Dimming Night Vision Safety™ (NVS®) Mirror**

The NVS® Mirror in your vehicle is the most advanced way to reduce annoying glare in the rearview mirror during any driving situation. For more information regarding NVS® mirrors and other applications, please refer to the Gentex website:

www.gentex.com

⚠ **CAUTION**

***The NVS® Mirror automatically reduces glare during driving conditions based upon light levels monitored in front of the vehicle and from the rear of the vehicle. These light sensors are visible through openings in the front and rear of the mirror case. Any object that obstructs either light sensor will degrade the automatic dimming control feature.***

**Automatic-dimming function**

Your mirror will automatically dim upon detecting glare from the vehicles traveling behind you. The auto-dimming function can be controlled by the Dimming ON/OFF Button:

1. Pressing the ⏻ button turns the auto-dimming function OFF which is indicated by the green Status Indicator LED turning off.
2. Pressing the ⏻ button again turns the auto-dimming function ON which is indicated by the green Status Indicator LED turning on.

✻ **NOTICE**

**The mirror defaults to the ON position each time the vehicle is started.**

**Z-Nav™ Compass Display**

The NVS™ Mirror in your vehicle is also equipped with a Z-Nav™ Compass that shows the vehicle Compass heading in the Display Window using the 8 basic cardinal headings (N, NE, E, SE, etc.).

**Compass function**

The Compass can be turned ON and OFF and will remember the last state when the ignition is cycled. To turn the display feature ON/OFF:

1. Press and release the button to turn the display feature OFF.
2. Press and release the button again to turn the display back ON.

Additional options can be set with press and hold sequences of the button and are detailed below.

There is a difference between magnetic north and true north. The compass in the mirror can compensate for this difference when it knows the Magnetic Zone in which it is operating. This is set either by the dealer or by the user. The operating Zone Numbers for North America are shown in the figure on the following section.

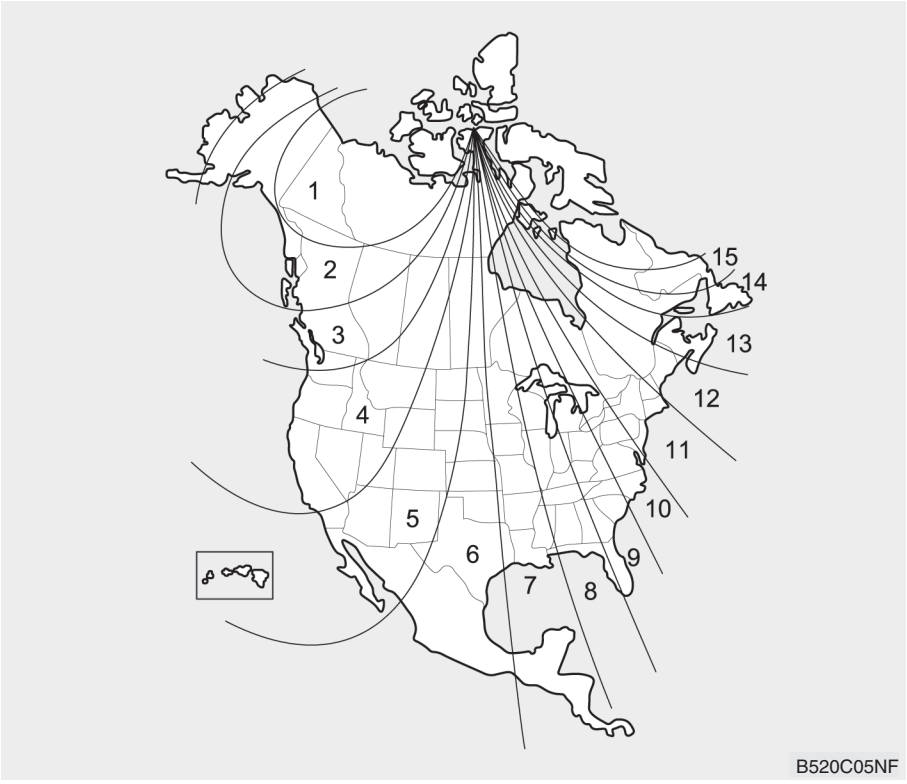


To adjust the Zone setting:

1. Determine the desired Zone Number based upon your current location on the Zone Map.
2. Press and hold the button for more than 3 but less than 6 seconds, the current Zone Number will appear on the display.
3. Pressing and holding the button again will cause the numbers to increment (Note: they will repeat …13, 14, 15, 1, 2, …). Releasing the button when the desired Zone Number appears on the display will set the new Zone.
4. Within about 5 seconds the compass will start displaying a compass heading again.

There are some conditions that can cause changes to the vehicle magnets, such as installing a ski rack or a CB antenna. Body repair work on the vehicle can also cause changes to the vehicle's magnetic field. In these situations, the compass will need to be re-calibrated to quickly correct for these changes. To re-calibrate the compass:

1. Press and hold the button for more than 6 seconds. When the compass memory is cleared a "C" will appear in the display.
2. To calibrate the compass, drive the vehicle in 2 complete circles at less than 5 mph (8 km/h).

**Integrated HomeLink® Wireless Control System**

The HomeLink® Wireless Control System provides a convenient way to replace up to three hand-held radio-frequency (RF) transmitters with a single built-in device. This innovative feature will learn the radio frequency codes of most current transmitters to operate devices such as gate operators, garage door openers, entry door locks, security systems, even home lighting. Both standard and rolling code-equipped transmitters can be programmed by following the outlined procedures. Additional HomeLink® information can be found at: www.homelink.com or by calling 1-800-355-3515.

**⚠ CAUTION**

***Before programming HomeLink® to a garage door opener or gate operator, make sure that people and objects are out of the way of the device to prevent potential harm or damage. Do not use HomeLink® with any garage door opener that lacks the safety stop and reverse features required by U.S. federal safety standards (this includes any garage door opener model manufactured before April 1, 1982). A garage door that cannot detect an object - signaling the door to stop and reverse - does not meet current U.S. federal safety standards. Using a garage door opener without these features increases the risk of serious injury or death.***

Retain the original transmitter of the RF device you are programming for use in other vehicles as well as for future HomeLink® programming. It is also suggested that upon the sale of the vehicle, the programmed HomeLink® buttons be erased for security purposes.

**Programming HomeLink®**

**✻ NOTICE**

- **When programming a garage door opener, it is advised to park the vehicle outside of the garage.**
- **It is recommended that a new battery be placed in the hand-held transmitter of the device being programmed to HomeLink® for quicker training and accurate transmission of the radio-frequency signal.**
- **Some vehicles may require the ignition switch to be turned to the second (or "accessories") position for programming and/or operation of HomeLink.**
- **In the event that there are still programming difficulties or questions after following the programming steps listed below, contact HomeLink® at: www.homelink.com or 1-800-355-3515.**

**Standard programming**

To train most devices, follow these instructions:

1. For first-time programming, press and hold the two outside buttons, HomeLink® Channel 1 and Channel 3 Buttons, until the indicator light begins to flash (after 20 seconds). Release both buttons. Do not hold the buttons for longer than 30 seconds.
2. Position the end of your hand-held transmitter 1-3 inches (2-8 cm) away from the HomeLink® buttons while keeping the indicator light in view.
3. Simultaneously press and hold both the HomeLink® and hand-held transmitter button. DO NOT release the buttons until step 4 has been completed.
4. While continuing to hold the buttons the red Indicator Status LED will flash slowly and then rapidly after HomeLink® successfully trains to the frequency signal from the hand-held transmitter. Release both buttons.
5. Press and hold the just-trained HomeLink® button and observe the red Status Indicator LED. If the indicator light stays on constantly, programming is complete and your device should activate when the HomeLink® button is pressed and released.
6. To program the remaining two HomeLink® buttons, follow steps 2 through 5.

**Rolling code programming**

Rolling code devices which are "code-protected" and manufactured after 1996 may be determined by the following:

- Reference the device owner's manual for verification.
- The handheld transmitter appears to program the HomeLink® Universal Transceiver but does not activate the device.
- Press and hold the trained HomeLink button. The device has the rolling code feature if the indicator light flashes rapidly and then turns solid after 2 seconds.

To train rolling code devices, follow these instructions:

1. At the garage door opener receiver (motor-head unit) in the garage, locate the "learn" or "smart" button. This can usually be found where the hanging antenna wire is attached to the motor-head unit. Exact location and color of the button may vary by garage door opener brand.

   If there is difficulty locating the training button, reference the device owner's manual or please visit our Web site at www.homelink.com.
2. Firmly press and release the "learn" or "smart" button (which activates the "training light").

**✻ NOTICE**

**There are 30 seconds in which to initiate step3.**

3. Return to the vehicle and firmly press, hold for two seconds and then release the desired HomeLink® button. Repeat the "press/hold/release" sequence a second time to complete the programming. (Some devices may require you to repeat this sequence a third time to complete the programming.)
4. Press and hold the just-trained HomeLink® button and observe the red Status Indicator LED. If the indicator light stays on constantly, programming is complete and your device should activate.
5. To program the remaining two HomeLink® buttons, follow either steps 1 through 4 above for other Rolling Code devices or steps 2 through 5 in Standard Programming for standard devices.

**Gate operator & Canadian programming**

During programming, your handheld transmitter may automatically stop transmitting. Continue to press the Integrated HomeLink® Wireless Control System button (note steps 2 through 4 in the Standard Programming portion of this document) while you press and re-press ("cycle") your handheld transmitter every two seconds until the frequency signal has been learned. The indicator light will flash slowly and then rapidly after several seconds upon successful training.

**Operating HomeLink®**

To operate, simply press and release the programmed HomeLink® button. Activation will now occur for the trained device (i.e. garage door opener, gate operator, security system, entry door lock, home/office lighting, etc.). For convenience, the hand-held transmitter of the device may also be used at any time.

**Reprogramming a single HomeLink® button**

To program a new device to a previously trained HomeLink® button, follow these steps:

1. Press and hold the desired HomeLink® button. Do NOT release until step 4 has been completed.
2. When the indicator light begins to flash slowly (after 20 seconds), position the handheld transmitter 1 to 3 inches away from the HomeLink® surface.
3. Press and hold the handheld transmitter button. The HomeLink® indicator light will flash, first slowly and then rapidly.
4. When the indicator light begins to flash rapidly, release both buttons.
5. Press and hold the just-trained HomeLink® button and observe the red Status Indicator LED. If the indicator light stays on constantly, programming is complete and your new device should activate.

**Erasing HomeLink® buttons**

Individual buttons cannot be erased. However, to erase all three programmed buttons:

1. Press and hold the two outer HomeLink® buttons until the indicator light begins to flash-after 20 seconds.
2. Release both buttons. Do not hold for longer than 30 seconds.

The Integrated HomeLink® Wireless Control System is now in the training (learn) mode and can be programmed at any time following the appropriate steps in the Programming sections above.

**FCC ID: NZLZTVHL3**
**IC: 4112A-ZTVHL3**

**This device complies with Part 15 of the FCC Rules.**

Operation is subject to the following two conditions:

1. this device may not cause harmful interference, and
2. This device must accept any interference received, including interference that may cause undesired operation.

**⚠ WARNING**

**The transceiver has been tested and complies with FCC and Industry Canada rules. Changes or modifications not expressly approved by the party responsible for compliance could void the user's authority to operate the device.**

NVS® is a registered trademark and Z-Nav™ is a trademark of the Gentex Corporation, Zeeland, Michigan. HomeLink® is a registered trademark owned by Johnson Controls, Incorporated, Milwaukee, Wisconsin.

D140200AUN-EU

## Outside rearview mirror

Be sure to adjust mirror angles before driving.

Your vehicle is equipped with both left-hand and right-hand outside rearview mirrors. The mirrors can be adjusted remotely with the remote switch. The mirror heads can be folded back to prevent damage during an automatic car wash or when passing in a narrow street.

**⚠ WARNING - Rearview mirrors**

- **The right outside rearview mirror is convex. Objects seen in the mirror are closer than they appear.**
- **Use your interior rearview mirror or direct observation to determine the actual distance of following vehicles when changing lanes.**

**⚠ CAUTION**

***Do not scrape ice off the mirror face; this may damage the surface of the glass. If ice should restrict movement of the mirror, do not force the mirror for adjustment. To remove ice, use a deicer spray, or a sponge or soft cloth with warm water.***

**⚠ CAUTION**

***If the mirror is jammed with ice, do not adjust the mirror by force. Use an approved spray de-icer (not radiator antifreeze) to release the frozen mechanism or move the vehicle to a warm place and allow the ice to melt.***

**⚠ WARNING**

**Do not adjust or fold the outside rearview mirrors while the vehicle is moving. This could result in loss of control, and an accident which could cause death, serious injury or property damage.**

D140201ABH

### *Remote control*

The electric remote control mirror switch allows you to adjust the position of the left and right outside rearview mirrors. To adjust the position of either mirror, move the lever (1) to right or left to select the right side mirror or the left side mirror, then press a corresponding point (▲) on the mirror adjustment control to position the selected mirror up, down, left or right.

After adjustment, put the lever into neutral position to prevent the inadvertent adjustment.

**⚠ CAUTION**

- ***The mirrors stop moving when they reach the maximum adjusting angles, but the motor continues to operate while the switch is depressed. Do not depress the switch longer than necessary, the motor may be damaged.***
- ***Do not attempt to adjust the outside rearview mirror by hand. Doing so may damage the parts.***

### *Electric chromic mirror (ECM) (if equipped)*

The electric chromic mirror automatically controls the glare from the headlights of the car behind you in nighttime or low light driving conditions. The sensor mounted in the mirror senses the light level around the vehicle, and automatically controls the headlight glare from vehicles behind you.

When the engine is running, the glare is automatically controlled by the sensor mounted in the rearview mirror.

Whenever the shift lever is shifted into R (Reverse), the mirror will automatically go to the brightest setting in order to improve the drivers view behind the vehicle. If the ECM of inside rear view mirror operates, it will be working.

**⚠ CAUTION**

***When cleaning the mirror, use a paper towel or similar material dampened with glass cleaner. Do not spray glass cleaner directly on the mirror as that may cause the liquid cleaner to enter the mirror housing.***

D140202ABH

### *Folding the outside rearview mirror*

**Electric Type (if equipped)**

To fold the outside rearview mirror, depress the button.

To unfold it, depress the button again.

> ⚠ **CAUTION**
>
> ***In case of the electric type of outside rearview mirror, don't fold it by hand. It could cause the failure of the motor.***

The ignition switch must be in the ON position for the electric outside rearview mirrors to fold.

The electric folding outside rearview mirror can be operated for approximately 30 seconds after the ignition key is removed or turned to the LOCK position.

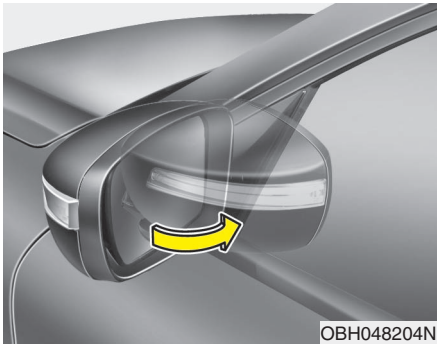


D140202AEN

**Manual Type (if equipped)**

To fold the outside rearview mirror, grasp the housing of the mirror and then fold it toward the rear of the vehicle.

## INSTRUMENT CLUSTER

■ **Type I**

1. Tachometer
2. Turn signal indicators
3. Speedometer
4. Engine temperature gauge
5. Warning and indicator lights
6. Fuel gauge
7. LCD screen
8. Low washer fluid level warning light*
   SCC sensor malfunction indicator*
   AUTO HOLD malfunction indicator*
9. Shift pattern indicator
10. SCC malfunction indicator*
    Charging system warning light

* : if equipped
* The actual cluster in the vehicle may differ from the illustration.
For more details refer to the "Gauges" in the next pages.

OBH042045N

■ **Type II**

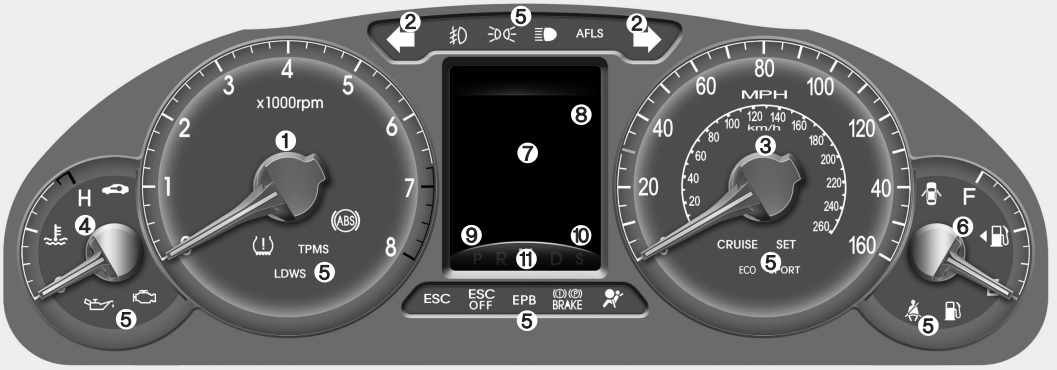


1. Tachometer
2. Turn signal indicators
3. Speedometer
4. Engine temperature gauge
5. Warning and indicator lights
6. Fuel gauge
7. LCD screen
8. LDWS FAIL LDWS malfunction indicator*
   SCC malfunction indicator*
   SCC sensor malfunction indicator*
9. Charging system warning light
   Low washer fluid level warning light*
   Trunk ajar warning light
10. AUTO HOLD AUTO HOLD indicator/
    AUTO HOLD malfunction indicator*
11. Shift pattern indicator

* : if equipped
* The actual cluster in the vehicle may differ from the illustration.
For more details refer to the "Gauges" in the next pages.

OBH042300N

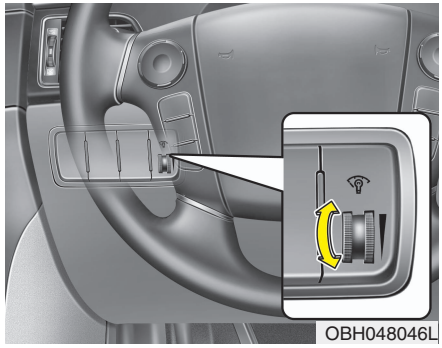


D150100AUN

## Instrument panel illumination

When the vehicle's parking lights or headlights are on, rotate the illumination control knob to adjust the brightness of the instrument panel illumination.

## Gauges

D150201AUN

### *Speedometer*

The speedometer indicates the forward speed of the vehicle.

The speedometer is calibrated in miles per hour and/or kilometers per hour.

D150202AUN

### *Tachometer*

The tachometer indicates the approximate number of engine revolutions per minute (rpm).

Use the tachometer to select the correct shift points and to prevent lugging and/or over-revving the engine.

When the door is open, or if the engine is not started within 1 minute, the tachometer pointer may move slightly in ON position with the engine OFF. This movement is normal and will not affect the accuracy of the tachometer once the engine is running.

**⚠ CAUTION**

***Do not operate the engine within the tachometer's RED ZONE.***

***This may cause severe engine damage.***

D150203AUN

***Engine temperature gauge***

This gauge shows the temperature of the engine coolant when the ignition switch is ON.

Do not continue driving with an overheated engine. If your vehicle overheats, refer to “If the engine overheats” in section 6.

**⚠ CAUTION**

***If the gauge pointer moves beyond the normal range area toward the “H” position, it indicates overheating that may damage the engine.***

**⚠ WARNING**

**Never remove the radiator cap when the engine is hot. The engine coolant is under pressure and could cause severe burns. Wait until the engine is cool before adding coolant to the reservoir.**

OBH041052

D150204BBH

### *Fuel gauge*

The fuel gauge indicates the approximate amount of fuel remaining in the fuel tank. The fuel tank capacity is given in section 8. The fuel gauge is supplemented by a low fuel warning light, which will illuminate when the fuel tank is near empty.

On inclines or curves, the fuel gauge pointer may fluctuate or the low fuel warning light may come on earlier than usual due to the movement of fuel in the tank.

**⚠ WARNING - Fuel gauge**

**Running out of fuel can expose vehicle occupants to danger.**

**You must stop and obtain additional fuel as soon as possible after the warning light comes on or when the gauge indicator comes close to the E level.**

**⚠ CAUTION**

***Avoid driving with a very low fuel level. If you run out of fuel, it could cause the engine to misfire and result in excessive loading of the catalytic converter.***

D150206ABH-EU

### *Trip computer*

The trip computer is a microcomputer-controlled driver information system that displays information related to driving, including odometer, tripmeter, elapsed time, average speed, average fuel consumption (if equipped), instant fuel consumption and distance to empty on the display when the ignition switch is in the ON position. All stored driving information (except odometer) is reset if the battery is disconnected.

OBH048053N

### *TRIP Button*

Push the TRIP button for less than 1 second to select tripmeter function as follows:

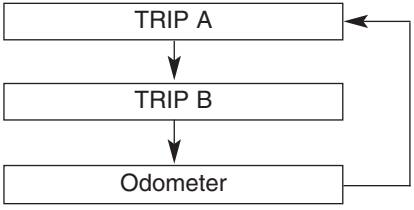

OBH042055N

### Odometer (mi. or km)

The odometer indicates the total distance the vehicle has been driven.

You will also find the odometer useful to determine when periodic maintenance should be performed.

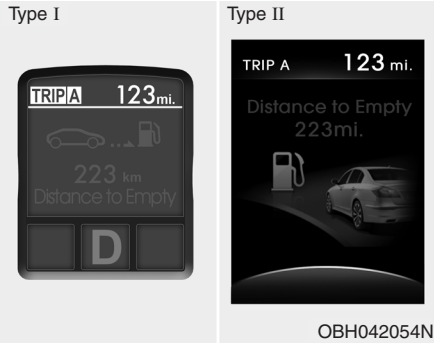


OBH042054N

### Tripmeter (mi. or km)

TRIP A : Tripmeter A

TRIP B : Tripmeter B

This mode indicates the distance of individual trips selected since the last tripmeter reset.

The meter's working range is from 0.0 to 999.9 miles (0.0 to 999.9 km).

Pressing the TRIP button for more than 1 second, when the tripmeter (TRIP A or TRIP B) is being displayed, clears the tripmeter to zero (0.0).

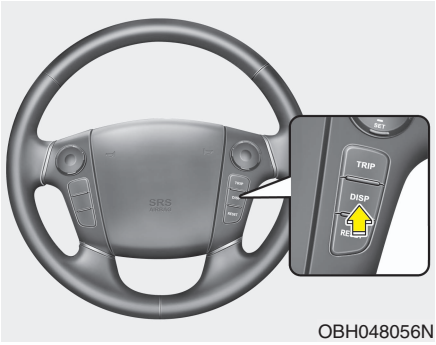


**DISP Button**

Press the DISP button to change between modes.

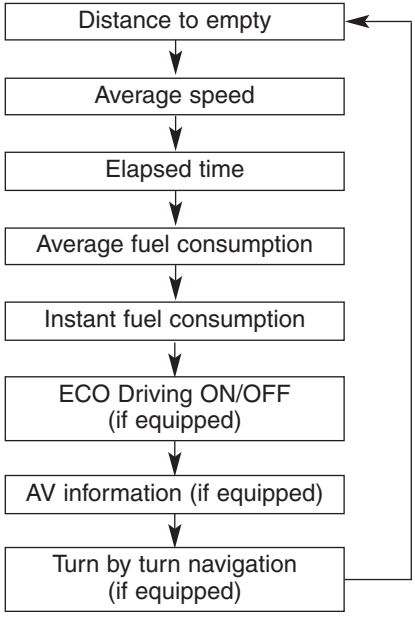

**Distance to empty (mi. or km)**

This mode indicates the estimated distance to empty based on the current fuel in the fuel tank and the amount of fuel delivered to the engine. When the remaining distance is below 30 miles (50 km), "---" will be displayed and the distance to empty indicator will blink.

The meter's working range is from 30 to 990 miles (50 to 990 km).

**Average speed (MPH or km/h)**

This mode calculates the average speed of the vehicle since the last average speed reset.

Even if the vehicle is not in motion, the average speed is calculated while the engine is running.

Pressing the RESET button for more than 1 second, when the average speed is being displayed, clears the average speed to zero (---). If the ignition switch is turned to OFF for more than 2 hours, it will be reset automatically.

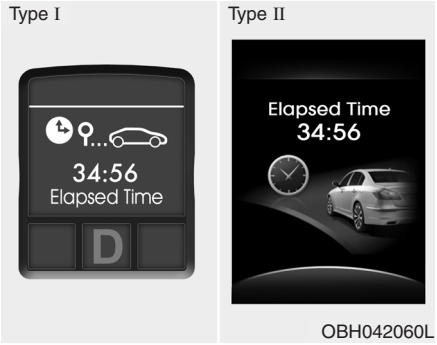


**Elapsed time**

This mode indicates the total time traveled since the last driving time reset.

Even if the vehicle is not in motion, the driving time is calculated while the engine is running.

The meter's working range is from 0:00~99:59.

Pressing the RESET button for more than 1 second, when the driving time is being displayed, clears the driving time to zero (0:00). If the ignition switch is turned to OFF for more than 2 hours, it will be reset automatically.

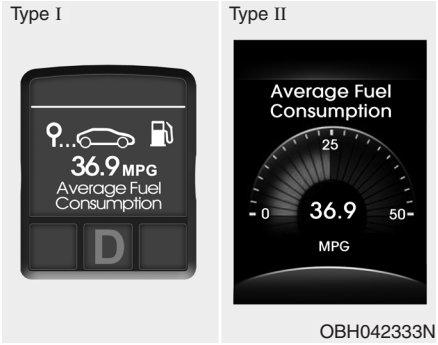


**Average fuel consumption (if equipped) (MPG or *l*/100 km)**

This mode calculates the average fuel consumption from the total fuel used and the distance since the last average consumption reset. The total fuel used is calculated from the fuel consumption input. For an accurate calculation, begin driving the vehicle for several miles.

Pressing the RESET button for more than 1 second, when the average fuel consumption is being displayed, clears the average fuel consumption to zero (----).

If the vehicle speed exceeds 1.6 MPH (1 km/h) after refueled more than 1.6 gallons (6 *l*), the average fuel consumption will be cleared to zero (---).

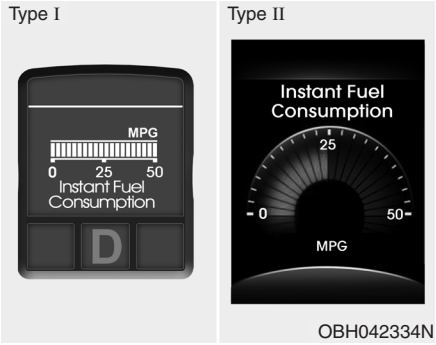


**Instant fuel consumption (MPG or *l*/100km)**

This mode calculates the instant fuel consumption every 0.2 second from the driving distance and quantity of fuel consumed.

## ✻ NOTICE

- **If the vehicle is not on level ground or the battery power has been interrupted, the "Distance to empty" function may not operate correctly.**
  **The trip computer may not register additional fuel if less than 1.6 gallons (6 liters) of fuel are added to the vehicle.**
- **The fuel consumption and distance to empty values may vary significantly based on driving conditions, driving habits, and condition of the vehicle.**
- **The distance to empty value is an estimate of the available driving distance. This value may differ from the actual driving distance available.**

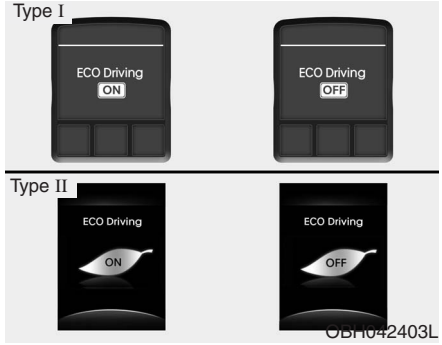


**ECO Driving ON/OFF mode (if equipped)**

You can turn the ECO indicator on/off on the instrument cluster in this mode.

If you push the DISP button (or the RESET button) more than 1 second in the ECO Driving ON mode, ECO Driving OFF is displayed in the screen and the ECO indicator turns off while driving.

If you want to display the ECO indicator again, press the DISP button (or the RESET button) more than 1 second in the ECO Driving OFF mode and then ECO Driving ON mode is displayed in the screen.

OBH042353L

**AV information (if equipped)**

This mode displays the state of the AV (RADIO, CD, USB, AUX etc.).

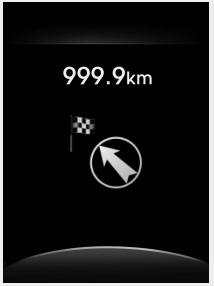


OBH042350L

**Turn by turn navigation (if equipped)**

This mode displays the information of the navigation.

D150300AEN

## Warnings and indicators

All warning lights are checked by turning the ignition switch ON (do not start the engine). Any light that does not illuminate should be checked by an authorized HYUNDAI dealer.

After starting the engine, check to make sure that all warning lights are off. If any are still on, this indicates a situation that needs attention. When releasing the parking brake, the brake system warning light should go off. The fuel warning light will stay on if the fuel level is low.

### *ECO indicator (if equipped)*

The ECO indicator light helps that you to drive economically.

It is displayed if you drive fuel efficiently to help you improve fuel efficiency.

- The ECO indicator (green) will turn on when you are driving fuel efficiently in the ECO Driving ON mode.

  If you don't want the indicator displayed, you can turn the ECO Driving ON mode to OFF mode by pressing the DISP button (or the RESET button).

  As per ECO Driving ON/OFF mode operation, refer to the previous page.
- The fuel-efficiency can be changed by the driver's driving habits and road conditions.
- The ECO indicator will not display if the condition doesn't meet economical driving such as P (Park), N (Neutral), R (Reverse) or sports mode.
- While the instant fuel consumption mode is displayed on the LCD screen, the ECO indicator turns off (if equipped).

**⚠ WARNING**

**Do not watch the indicator while driving. This will distract you and may cause an accident that results in severe personal injury.**

D150302ABH

### *Air bag warning light*

This warning light will illuminate for approximately 6 seconds each time you turn the ignition switch to the ON position.

This light also comes on when the Supplemental Restraint System (SRS) is not working properly. If the SRS air bag warning light does not come on, or continuously remains on after operating for about 6 seconds when you turned the ignition switch to the ON position or started the engine, or if it comes on while driving, have the SRS inspected by an authorized HYUNDAI dealer.

D150303AEN

### *Anti-lock brake system (ABS) warning light*

This light illuminates if the ignition switch is turned ON and goes off in approximately 3 seconds if the system is operating normally.

If the ABS warning light remains on, comes on while driving, or does not come on when the ignition switch is turned to the ON position, this indicates that there may be a malfunction with the ABS.

If this occurs, have your vehicle checked by an authorized HYUNDAI dealer as soon as possible. The normal braking system will still be operational, but without the assistance of the anti-lock brake system.

**Electronic brake force distribution (EBD) system warning light**

If these two warning lights illuminate at the same time while driving, your vehicle may have a malfunction with the ABS and EBD system.

In this case, your ABS and regular brake system may not work normally. Have the vehicle checked by an authorized HYUNDAI dealer as soon as possible.

**⚠ WARNING**

**If the both ABS and brake warning lights are on and stay on, your vehicle's brake system will not work normally during sudden braking. In this case, avoid high speed driving and abrupt braking. Have your vehicle checked by an authorized HYUNDAI dealer as soon as possible.**

**✻ NOTICE**

**If the ABS warning light or EBD warning light is on and stays on, the speedometer or odometer/tripmeter may not work. In this case, have your vehicle checked by an authorized HYUNDAI dealer as soon as possible.**

D150304CBH-EU

### *Seat belt warning*

As a reminder to the driver, the seat belt warning light will blink for approximately 6 seconds each time you turn the ignition switch ON, regardless of belt fastening.

The warning light will blink again for approximately 6 seconds when starting the engine.

If the driver's seat belt is not fastened when the ignition switch is turned on, the seat belt warning light and chime will operate for approximately 6 seconds. But if it is fastened within the 6 seconds, the warning light will blink for the 6 seconds and the warning chime will turn off immediately.

If the driver's seat belt is disconnected after the ignition switch is turned to the ON position, the seat belt warning light will turn on for approximately 6 seconds. But if it is fastened within the 6 seconds, the warning light will turn off immediately.

If the driver's seat belt is not fastened when the vehicle speed exceeds 6 mph (10 km/h), the seat belt warning light and chime will operate for approximately 11 times with a pattern of 6 seconds on and 24 seconds off until the belt is fastened or the vehicle speed decreases below 3 mph (5 km/h).

D150305AUN

### *Turn signal indicator*

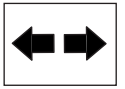

The blinking green arrows on the instrument panel show the direction indicated by the turn signals. If the arrow comes on but does not blink, blinks more rapidly than normal, or does not illuminate at all, a malfunction in the turn signal system is indicated. Your dealer should be consulted for repairs.

D150306AUN

### *High beam indicator*

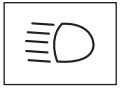

This indicator illuminates when the headlights are on and in the high beam position or when the turn signal lever is pulled into the Flash-to-Pass position.

D150331ABH

### *Tail light indicator*

This indicator illuminates when the tail lights are on.

D150307AEN

### *Engine oil pressure warning light*

This warning light indicates the engine oil pressure is low.

If the warning light illuminates while driving:

1. Drive safely to the side of the road and stop.
2. With the engine off, check the engine oil level. If the level is low, add oil as required.

If the warning light remains on after adding oil or if oil is not available, call an authorized HYUNDAI dealer.

**⚠ CAUTION**

***If the engine is not stopped immediately after the engine oil pressure warning light is illuminated, severe damage could result.***

**⚠ CAUTION**

***If the oil pressure warning light stays on while the engine is running, serious engine damage may result. The oil pressure warning light comes on whenever there is insufficient oil pressure. In normal operation, it should come on when the ignition switch is turned on, then go out when the engine is started. If the oil pressure warning light stays on while the engine is running, there is a serious malfunction.***

***If this happens, stop the car as soon as it is safe to do so, turn off the engine and check the oil level. If the oil level is low, fill the engine oil to the proper level and start the engine again. If the light stays on with the engine running, turn the engine off immediately. In any instance where the oil light stays on when the engine is running, the engine should be checked by an authorized HYUNDAI dealer before the car is driven again.***

D150308ABH-EU

### *Parking brake & brake fluid warning light*

**Parking brake warning**

This light is illuminated when the parking brake is applied with the ignition switch in the START or ON position. The warning light should go off when the parking brake is released while an engine is running.

The parking brake warning chime will sound to remind you that the parking brake is applied when you are driving above 6 mph (10 km/h). Always release the parking brake before you drive.

**Low brake fluid level warning**

If the warning light remains on, it may indicate that the brake fluid level in the reservoir is low.

If the warning light remains on:

1. Drive carefully to the nearest safe location and stop your vehicle.
2. With the engine stopped, check the brake fluid level immediately and add fluid as required. Then check all brake components for fluid leaks.
3. Do not drive the vehicle if leaks are found, the warning light remains on or the brakes do not operate properly.

Have the vehicle towed to any authorized HYUNDAI dealer for a brake system inspection and necessary repairs.

Your vehicle is equipped with a dual-diagonal braking system. This means you still have braking on two wheels even if one of the brake circuits is damaged or malfunctions. With only one of the circuits working, more than normal pedal travel and greater pedal pressure are required to stop the car. Also, the car will not stop in as short a distance with only a portion of the brake system working. If the brakes fail while you are driving, shift to a lower gear for additional engine braking and stop the car as soon as it is safe to do so.

To check bulb operation, check whether the parking brake and brake fluid warning light illuminates when the ignition switch is in the ON position.

**⚠ WARNING**

**Driving the vehicle with a warning light on is dangerous. If the brake warning light remains on, have the brakes checked and repaired immediately by an authorized HYUNDAI dealer.**

D150331ABH

***Low tire pressure telltale***

***Low tire pressure position telltale***

The low tire pressure telltale comes on for 3 seconds after the ignition switch is turned to the ON position.

If the warning light does not come on, or continuously remains on after coming on for about 3 seconds when you turned the ignition switch to the ON position, the Tire Pressure Monitoring System is not working properly. If this occurs, have your vehicle checked by an authorized HYUNDAI dealer as soon as possible.

The warning lights will also illuminate if one or more of your tires is significantly under-inflated. The low tire pressure position telltale (supplemental) indicates which tire is significantly under-inflated by illuminating the corresponding position light. You should stop and check your tires as soon as possible. If the warning lights illuminate while driving, reduce vehicle speed immediately and stop the vehicle. Avoid hard braking and overcorrecting at the steering wheel. Inflate the tires to the proper pressure as indicated on the vehicle's tire information placard.

**⚠ WARNING - Low tire pressure**

**Significantly low tire pressure makes the vehicle unstable and can contribute to loss of vehicle control and increased braking distances.**

**Continued driving on tires with low pressure will cause the tires to overheat and fail.**

D150332AEN

### *TPMS (Tire Pressure Monitoring System) malfunction indicator*

The TPMS malfunction indicator comes on for 3 seconds after the ignition switch is turned to the ON position. If the warning light does not come on, or remains on after 3 seconds when the ignition switch is turned to the ON position, the Tire Pressure Monitoring System is not working properly. If this occurs, have your vehicle checked by an authorized HYUNDAI dealer as soon as possible.

The warning light also comes on and stays on when there is a problem with the Tire Pressure Monitoring System.

If this happens, the system may not monitor the tire pressure. Have the system checked by an authorized HYUNDAI dealer as soon as possible.

**⚠ WARNING - Safe stopping**

- **The TPMS cannot alert you to severe and sudden tire damage caused by external factors.**
- **If you feel any vehicle instability, immediately take your foot off the accelerator, apply the brakes gradually and with light force, and slowly move to a safe position off the road.**

For more information about the TPMS, refer to “Tire Pressure Monitoring System” in section 6.

D150312ABH

### *Shift pattern indicator*

The indicator displays which automatic transmission shift position is selected.

D150313AEN

### *Charging system warning light*

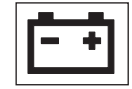

This warning light indicates a malfunction of either the generator or electrical charging system.

If the warning light comes on while the vehicle is in motion:

1. Drive to the nearest safe location.
2. With the engine off, check the generator drive belt for looseness or breakage.
3. If the belt is adjusted properly, a problem exists somewhere in the electrical charging system. Have an authorized HYUNDAI dealer correct the problem as soon as possible.

D150309AUN

### *Front fog light indicator (if equipped)*

This light comes on when the front fog lights are ON.

D150315AHD

### *Trunk lid open warning light*

This warning light illuminates when the trunk lid is not closed securely with the ignition in any position.

D150316AUN

### *Door ajar warning light*

This warning light illuminates when a door is not closed securely with the ignition switch in any position.

D150317CBH

### *Immobilizer indicator*

**Without smart key system**

This light illuminates when the immobilizer key is inserted and turned to the ON position to start the engine.

At this time, you can start the engine. The light goes out after the engine is running.

If this light blinks when the ignition switch is in the ON position before starting the engine, have the system checked by an authorized HYUNDAI dealer.

**With smart key system (if equipped)**

If any of the following occurs in a vehicle equipped with the smart key, the immobilizer indicator illuminates, blinks or the light goes off.

- When the smart key is in the vehicle, if the engine start/stop button is turned to the ON position, the indicator will illuminate until the engine is started. However, when the smart key is not in the vehicle, if the engine start/stop button is depressed, the indicator will blink for a few minutes to indicate that you will not be able to start the engine.
- When the ignition switch is turned to the ON position and the indicator turns off after 2 seconds, the system may have a problem. Have the vehicle checked by an authorized HYUNDAI dealer.
- When the battery is weak, if the engine start/stop button is depressed, the indicator will blink and you will not be able to start the engine. However, you may still be able to start the engine by inserting the smart key in the smart key holder. If smart key system related parts have a problem, the indicator blinks.

D150318AUN

### *Low fuel level warning light*

This warning light indicates the fuel tank is nearly empty. When it comes on, you should add fuel as soon as possible. Driving with the fuel level warning light on or with the fuel level below “E” can cause the engine to misfire and damage the catalytic converter.

D150319AUN

### *Low washer fluid level warning light (if equipped)*

This warning light indicates the washer fluid reservoir is near empty. Refill the washer fluid as soon as possible.

D150320ABH-EU

### *Malfunction indicator light (MIL) (check engine light)*

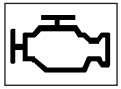

This indicator light is part of the Engine Control System which monitors various emission control system components. If this light illuminates while driving, it indicates that a potential malfunction has been detected somewhere in the emission control system.

This light will also illuminate when the ignition switch is turned to the ON position, and will go out in a few seconds after the engine is started. If it illuminates while driving, or does not illuminate when the ignition switch is turned to the ON position, take your vehicle to your nearest authorized HYUNDAI dealer and have the system checked.

Generally, your vehicle will continue to be drivable, but have the system checked by an authorized HYUNDAI dealer promptly.

**⚠ CAUTION**

- ***Prolonged driving with the Malfunction Indicator Light illuminated may cause damage to the emission control systems which could effect drivability and/or fuel economy.***
- ***If the Malfunction Indicator Light illuminates, potential catalytic converter damage is possible. This could result in loss of engine power. Have the Engine Control System inspected as soon as possible by an authorized HYUNDAI dealer.***

D150323AUN-EU

### *ESC (Electronic Stability Control) indicator*

ESC

The ESC indicator will illuminate when the ignition switch is turned ON, but should go off after approximately 3 seconds. When the ESC is on, it monitors the driving conditions and under normal driving conditions, the ESC light will remain off. When a slippery or low traction condition is encountered, the ESC will operate, and the ESC indicator will blink to indicate the ESC is operating.

The ESC indicator stays on when the ESC may have a malfunction. Take your car to an authorized HYUNDAI dealer and have the system checked.

D150324AEN-EU

### *ESC OFF indicator*

ESC OFF

To switch to ESC OFF mode, press the ESC OFF button. The ESC OFF indicator will illuminate indicating the ESC is deactivated.

D150325ABH

### *Cruise indicator (if equipped)*

**CRUISE indicator**

CRUISE

The indicator light illuminates when the cruise control system is enabled.

The cruise indicator light in the instrument cluster is illuminated when the cruise control ON-OFF button on the steering wheel is pushed.

The indicator light turns off when the cruise control ON-OFF button is pushed again. For more information about the use of cruise control, refer to “Cruise control system or Smart cruise control system” in section 5.

**Cruise SET indicator**

SET

The indicator light illuminates when the cruise function switch (SET- or RES+) is ON.

The cruise SET indicator light in the instrument cluster is illuminated when the cruise control switch (SET- or RES+) is pushed. The cruise SET indicator light does not illuminate when the cruise control switch (CANCEL) is pushed or the system is disengaged.

D150320ABH

### *Smart cruise control indicator (if equipped)*

**SCC (Smart cruise control) malfunction indicator**

The warning light illuminates when the vehicle to vehicle distance control system is not functioning normally.

Take your vehicle to an authorized HYUNDAI dealer and have the system checked.

**SCC (Smart cruise control) sensor malfunction indicator**

If the sensor or cover is dirty or obscured with foreign matter such as snow, the indicator will illuminate. Clean the sensor by using a soft cloth.

For more information about the use of smart cruise control, refer to "Smart cruise control system" in section 5.

### *LDWS indicator (if equipped)*

The LDWS indicator will illuminate when you turn the lane departure warning system on by pressing the LDWS switch.

### *LDWS malfunction indicator (if equipped)*

If the LDWS malfunction indicator comes on, the LDWS is not working properly. Take your vehicle to an authorized HYUNDAI dealer and have the system checked.

D150327ABH

### *Key reminder warning chime*

**Without smart key**

If the driver's door is opened while the ignition key is left in the ignition switch (ACC or LOCK position), the key reminder warning chime will sound. This is to prevent you from locking your keys in the vehicle. The chime sounds until the key is removed from the ignition switch or the driver's door is closed.

**With smart key**

If the driver's door is opened while the smart key is in the vehicle with the engine start/stop button in ACC or the smart key is in the smart key holder with the engine start/stop button in OFF, the key reminder warning chime will sound.

The chime sounds until the smart key is removed from the smart key holder or the driver's door is closed.

D150332ABH

### *EPB (Electric Parking Brake) malfunction indicator (if equipped)*

EPB

The EPB malfunction indicator will illuminate when the ignition switch is turned ON, but should go off after approximately 3 seconds. If the warning light does not come on, or continuously remains on after coming on for about 3 seconds when you turned the ignition switch to the ON position, the Electric Parking Brake is not working properly.

If it comes on while driving, the EPB is not working properly.

Take your vehicle to an authorized HYUNDAI dealer and have the system checked.

The EPB malfunction indicator may illuminate when the ESC indicator comes on to indicate that the ESC is not working properly, but if this occurs it does not indicate malfunction of the EPB.

D150333ABH

### *AUTO HOLD indicator (if equipped)*

AUTO HOLD

If you press the AUTO HOLD switch, the white AUTO HOLD indicator on the cluster will illuminate. And when you stop the vehicle completely by pressing the brake pedal, the indicator changes from white to green.

If the AUTO HOLD malfunction indicator on the LCD screen lights up yellow, the AUTO HOLD is not working properly. Take your vehicle to an authorized HYUNDAI dealer and have the system checked.

For more information, refer to “AUTO HOLD” in section 5.

D150334ABH

### *AFLS(Adaptive Front Lighting System) malfunction indicator (if equipped)*

AFLS

If the AFLS malfunction indicator comes on, the AFLS is not working properly. Drive to the nearest safe location and restart the engine. If the indicator continuously remains on, take your vehicle to an authorized HYUNDAI dealer and have the system checked.

D150401ABH

## Warning on the LCD screen (if equipped)

### *Key is not in vehicle*

Type I

Type II

If the smart key is not in the vehicle and if any door is opened or closed with the engine start/stop button in ACC, ON, or START, the warning illuminates on the LCD screen. The chime also sounds for 5 seconds when the smart key is not in the vehicle and any door is closed.

Turn the ignition switch off or get hold of the smart key.

D150402ABH

### *Key is not detected*

Type I

Type II

If the smart key is not in the vehicle or is not detected and you push the engine start/stop button, the warning illuminates on the LCD screen for 10 seconds.

D150403ABH

### *Low key battery*

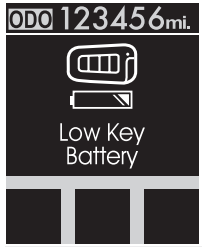


Type I

Type II

When the smart key in the vehicle discharges, the warning illuminates on the LCD screen for 10 seconds.

Replace the battery with a new one. If it is not possible, you can start the engine by inserting the smart key into the smart key holder and pushing the engine start/stop button.

D150404ABH

***Press brake pedal to start engine***

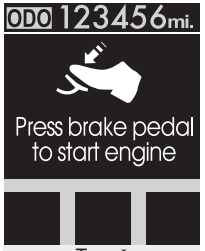


Type I

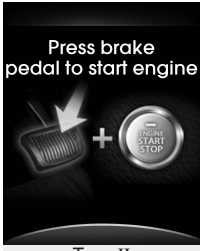


Type II

If the engine start/stop button turns to the ACC position twice by pushing the engine start/stop button repeatedly without pressing the brake pedal, the warning illuminates on the LCD screen for 10 seconds to indicate that you should press the brake pedal to start the engine.

D150405ABH

***Shift to "P" position***

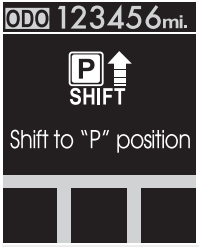


Type I

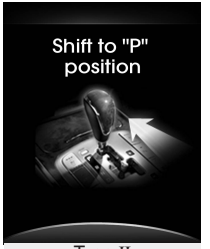


Type II

If you push the engine start/stop button with the engine start/stop button ON and the shift lever not in P(Park), the warning illuminates on the LCD screen for 10 seconds to indicate that you should press the engine start/stop button with the shift lever in P(Park) to turn off the engine.

D150406ABH

***Remove key***

Type I

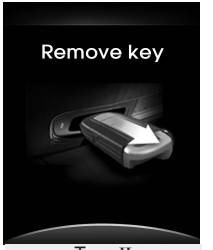


Type II

When you turn off the engine with the smart key in the smart key holder, the warning illuminates on the LCD screen for 10 seconds.

Push the smart key inward and pull it out from the smart key holder.

D150407ABH

***Insert key***

Type I

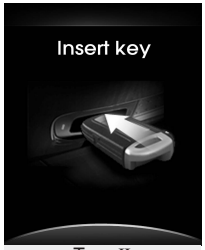


Type II

If you push the engine start/stop button while the "Key is not detected" illuminates on the LCD screen, the warning illuminates for 10 seconds.

D150408ABH

***Press start button again***

Type I

Type II

If there is a problem with the engine start/stop button system, the warning illuminates for 10 seconds to indicate that you could start the engine by pressing the engine start/stop button while pressing the brake pedal.

If the warning illuminates each time you push the engine start/stop button, take your vehicle to an authorized HYUNDAI dealer and have the system checked.

D150409ABH

***Shift to "P" or "N" to start the engine***

Type I

Type II

If you try to start the engine with the shift lever not in P(Park) or N(Neutral), the warning illuminates for 10 seconds on the LCD screen.

You can also start the engine with the shift lever in N(Neutral), but for your safety start the engine with the shift lever in P(Park).

D150412ABH

### *Check stop lamp fuse*

Type I

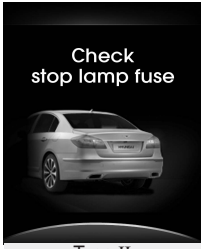

Type II

When the stop lamp fuse is disconnected, the warning illuminates for 10 seconds on the LCD screen.

Replace the fuse with a new one. If that is not possible you can start the engine by pressing the engine start/stop button for 10 seconds with the ignition switch in ACC.

## PARKING ASSIST SYSTEM (IF EQUIPPED)

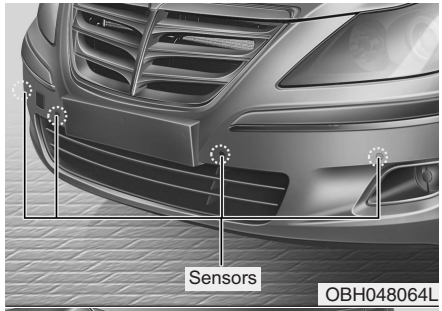


OBH048064L

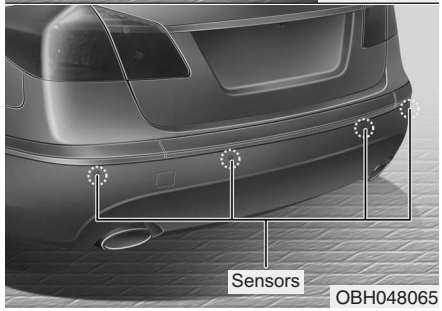


OBH048065

D170000ABH

The parking assist system assists the driver during movement of the vehicle by chiming if any object is sensed within the distance of 23.62 in (60 cm) in front or 39.37 in (100 cm) behind the vehicle. This system is a supplemental system and it is not intended to nor does it replace the need for extreme care and attention of the driver.

The sensing range and objects detectable by the sensors are limited. When moving the vehicle, pay as much attention to what is in front of and behind you as you would in a vehicle without a parking assist system.

**⚠ WARNING**

**The parking assist system should only be considered as a supplementary function. The driver must check the front and rear view. The operational function of the parking assist system can be affected by many factors and conditions of the surroundings, so the responsibility rests always with the driver.**

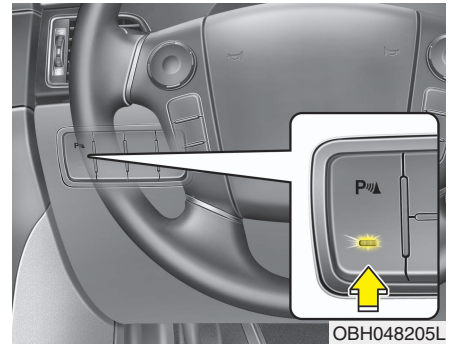

OBH048205L

### Operation of the parking assist system

D170101ABH

***Operating condition***

- This system will activate when the parking assist button is pressed with the engine running.
- Sensing distance in backing up is approximately 39.37 in (100 cm) when you are driving less than 6.21 mph (10 km/h).
- Sensing distance in moving forward is approximately 23.62 in (60 cm) when you are driving less than 6.21 mph (10 km/h).
- When more than two objects are sensed at the same time, the closest one will be recognized first.

## ✻ NOTICE

**The parking assist system may not operate if the vehicle's distance from the object is already less than approximately 9.84 in (25 cm) when the system is ON.**

D170102ABH

***Types of warning sound***

- When an object is 39.37 in (100 cm) to 23.62 in (61 cm) from the rear bumper : Buzzer beeps intermittently
- When an object is 23.62 in (60 cm) to 11.81 in (31 cm) from the front or rear bumper : Buzzer sounds two beeps intermittently
- When an object is within 11.81 in (30 cm) of the front or rear bumper : Buzzer sounds continuously.

D170200ABH

### Non-operational conditions of parking assist system

***Parking assist system may not operate normally when:***

1. Moisture is frozen to the sensor. (It will operate normally when the moisture melts.)
2. The sensor is covered with foreign matter, such as snow or water, or the sensor cover is blocked. (It will operate normally when the material is removed or the sensor is no longer blocked.)
3. The sensor is stained with foreign matter such as snow or water. (Sensing range will return to normal when removed.)

***There is a possibility of parking assist system malfunction when:***

1. Driving on uneven road surfaces such as unpaved roads, gravel, bumps, or gradient.
2. Objects generating excessive noise such as vehicle horns, loud motorcycle engines, or truck air brakes can interfere with the sensor.
3. Heavy rain or water spray.
4. Wireless transmitters or mobile phones present near the sensor.
5. Sensor is covered with snow.

***Detecting range may decrease when:***

1. Outside air temperature is extremely hot or cold.
2. Undetectable objects smaller than 39.37 in (1 m) and narrower than 5.51 in (14 cm) in diameter.

***The following objects may not be recognized by the sensor:***

1. Sharp or slim objects such as ropes, chains or small poles.
2. Objects, which tend to absorb sensor frequency such as clothes, spongy material or snow.

## ✻ NOTICE

1. **The warning may not sound sequentially depending on the speed and shapes of the objects detected.**
2. **The parking assist system may malfunction if the vehicle bumper height or sensor installation has been modified. Any non-factory installed equipment or accessories may also interfere with the sensor performance.**
3. **Sensor may not recognize objects less than 11.81 in (30 cm) from the sensor, or it may sense an incorrect distance. Use with caution.**
4. **When the sensor is frozen or stained with snow or water, the sensor may be inoperative until the stains are removed using a soft cloth.**
5. **Do not push, scratch or strike the sensor with any hard objects that could damage the surface of the sensor. Sensor damage could occur.**

## ✻ NOTICE

**This system can only sense objects within the range and location of the sensors, it can not detect objects in other areas where sensors are not installed. Also, small or slim objects, or objects located between sensors may not be detected.**
**Always visually check in front and behind the vehicle when driving.**
**Be sure to inform any drivers in the vehicle that may be unfamiliar with the system regarding the system's capabilities and limitations.**

## ⚠ WARNING

**Pay close attention when the vehicle is driven close to objects on the road, particularly pedestrians, and especially children. Be aware that some objects may not be detected by the sensors, due to the objects distance, size or material, all of which can limit the effectiveness of the sensor. Always perform a visual inspection to make sure the vehicle is clear of all obstructions before moving the vehicle in any direction.**

D170400ABH

## Self-diagnosis

If you don't hear an audible warning sound or if the buzzer sounds intermittently when shifting the gear to the R (Reverse) position, this may indicate a malfunction in the rear parking assist system. If this occurs, have your vehicle checked by an authorized HYUNDAI dealer as soon as possible.

**⚠ WARNING**

**Your new vehicle warranty does not cover any accidents or damage to the vehicle or injuries to its occupants related to a parking assist system. Always drive safely and cautiously.**

## REAR VIEW CAMERA (IF EQUIPPED)

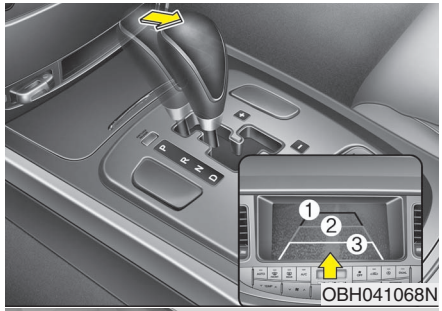

OBH041068N

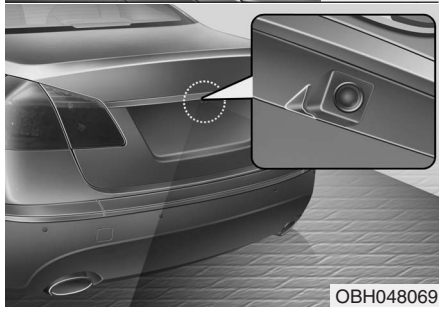
OBH048069

D330000ABH

The rearview camera will activate when the back-up light is ON with the ignition switch ON and the shift lever in the R position.

This system is a supplemental system that shows behind the vehicle through the navigation display while backing-up.

The green line (1) is the position 118.11 in (300 cm) from the rear bumper.

The yellow line (2) is the position 39.37 in (100 cm) from the rear bumper.

The red line (3) is the position 19.68 in (50 cm) from the rear bumper.

**⚠ WARNING**

- **This system is a supplementary function only. It is the responsibility of the driver to always check the inside/outside rearview mirror and the area behind the vehicle before and while backing up.**
- **Always keep the camera lens clean. If the lens is covered with foreign matter, the camera may not operate normally.**

**✻ NOTICE**

**The rearview camera may not operate normally, when you drive in the extremely high or low temperature area (operating temperature : -20°C~65°C (-13°F~149°F)).**

## HAZARD WARNING FLASHER

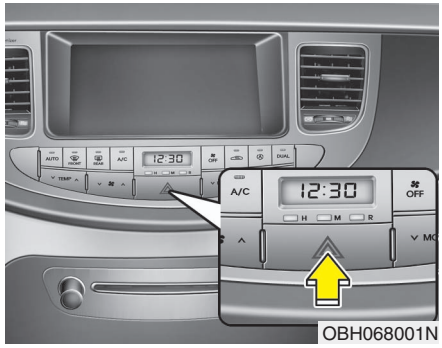

OBH068001N

D180000AUN

The hazard warning flasher should be used whenever you find it necessary to stop the car in a hazardous location. When you must make such an emergency stop, always pull off the road as far as possible.

The hazard warning lights are turned on by pushing in the hazard switch. This causes all turn signal lights to blink. The hazard warning lights will operate even though the key is not in the ignition switch.

To turn the hazard warning lights off, push the switch a second time.

# LIGHTING

D190100ABH

## Battery saver function

- The purpose of this feature is to prevent the battery from being discharged. The system automatically turns off the parking lights when the driver removes the ignition key (smart key : turns off the engine) and opens the driver-side door (in that order).
- With this feature, the parking lights will be turned off automatically if the driver parks on the side of the road at night.

  If necessary, to keep the lights on when the ignition key is removed (smart key : turns off the engine), perform the following:

  1) Open the driver-side door.
  2) Turn the parking lights OFF and ON again using the light switch on the steering column.

## Headlight welcome function (if equipped)

When the headlight switch is set to ON or AUTO position and all doors (and trunk) are closed and locked, if you press the door unlock button on the transmitter (or the smart key), the headlights will come on for about 15 seconds. At this time, if you press the door lock button, the headlights will turn off immediately.

D190200ABH

## Headlight escort function (if equipped)

If you turn the ignition switch to the ACC or OFF position with the headlights ON, the headlights (and/or tail lights) remain on for about 20 minutes. However, if the driver's door is opened and closed, the headlights are turned off after 30 seconds.

The headlights can be turned off by pressing the lock button on the transmitter (or smart key) twice or turning the light switch to the OFF or Auto position.

If the headlight switch is in the AUTO position, the function can only operate at night.

### ⚠ CAUTION

***If the driver gets out of the vehicle through other doors (except driver's door), the battery saver function does not operate and the headlight escort function does not turn off automatically. Therefore, it causes the battery to be discharged. In this case, make sure to turn off the lamp before getting out of the vehicle.***

OBH049072

D190400AUN

## Lighting control

The light switch has a Headlight and a Parking light position.

To operate the lights, turn the knob at the end of the control lever to one of the following positions:

(1) OFF position
(2) Parking light position
(3) Headlight position
(4) Auto light/AFLS position (if equipped)

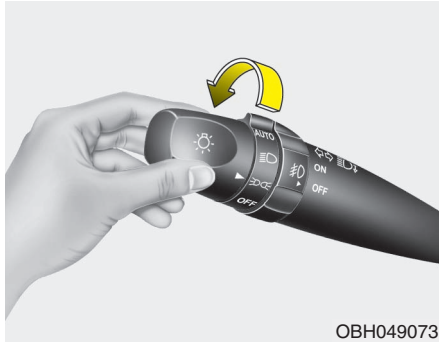


OBH049073

D190401ABH

***Parking light position ( ⊃DOE⊂ )***

When the light switch is in the parking light position (1st position), the tail, license and instrument panel lights are ON and the tail light indicator is ON (if equipped).

OBH049074

D190402ABH

***Headlight position ( ≡D )***

When the light switch is in the headlight position (2nd position), the head, tail, license and instrument panel lights are ON.

## ✻ NOTICE

**The ignition switch must be in the ON position to turn on the headlights.**

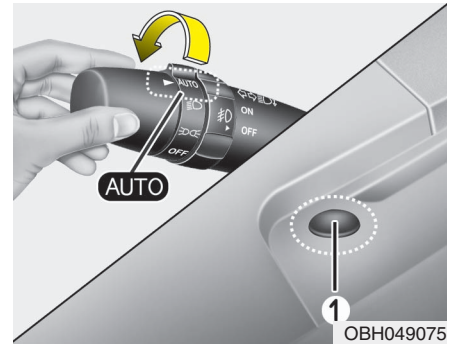


OBH049075

D190403AUN

***Auto light/AFLS position (if equipped)***

When the light switch is in the AUTO light position while the engine is running, the taillights and headlights will be turned ON or OFF automatically depending on the amount of light outside the vehicle.

If your vehicle is equipped with the adaptive front lighting system (AFLS), it will also operate when the headlamp is ON.

**⚠ CAUTION**

- ***Never place anything over the sensor (1) located on the instrument panel. This will ensure better auto-light system control.***
- ***Don't clean the sensor using a window cleaner. The cleaner may leave a light film which could interfere with sensor operation.***
- ***If your vehicle has window tint or other types of metallic coating on the front windshield, the Auto light system may not work properly.***

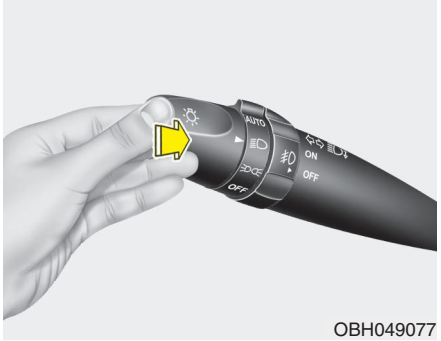


OBH049077

D190500AUN

## High beam operation

To turn on the high beam headlights, push the lever away from you. Pull it back for low beams.

The high beam indicator will light when the headlight high beams are switched on.

To prevent the battery from being discharged, do not leave the lights on for a prolonged time while the engine is not running.

**⚠ WARNING**

**Do not use high beam when there are other vehicles. Using high beam could obstruct the other driver's vision.**

OBH049076

To flash the headlights, pull the lever towards you. It will return to the normal (low beam) position when released. The headlight switch does not need to be on to use this flashing feature.

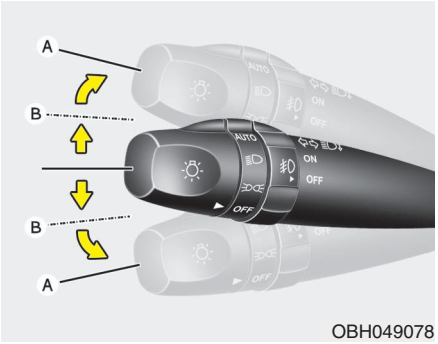


OBH049078

D190600AUN

## Turn signals and lane change signals

The ignition switch must be on for the turn signals to function. To turn on the turn signals, move the lever up or down (A). Green arrow indicators on the instrument panel indicate which turn signal is operating. They will self-cancel after a turn is completed. If the indicator continues to flash after a turn, manually return the lever to the OFF position.

To signal a lane change, move the turn signal lever slightly and hold it in position (B). The lever will return to the OFF position when released.

If an indicator stays on and does not flash or if it flashes abnormally, one of the turn signal bulbs may be burned out and will require replacement.

### *One-touch triple turn signal (if equipped)*

To activate an one-touch triple turn signal move the turn signal lever slightly for less than 1.8 seconds and then release it. The lane change signals will blink 3 times.

### ✻ NOTICE

**If an indicator flash is abnormally quick or slow, a bulb may be burned out or have a poor electrical connection in the circuit.**

OBH049079

D190700AHD-EU

## Front fog light (if equipped)

Fog lights are used to provide improved visibility and avoid accidents when visibility is poor due to fog, rain or snow etc. The fog lights will turn on when the fog light switch (1) is turned to ON after the headlights are turned on.

To turn off the fog lights, turn the switch to OFF.

### ⚠ CAUTION

***When in operation, the fog lights consume large amounts of vehicle electrical power. Only use the fog lights when visibility is poor or unnecessary battery and generator drain could occur.***

### Daytime running light (if equipped)

Daytime Running Lights (DRL) can make it easier for others to see the front of your vehicle during the day. DRL can be helpful in many different driving conditions, and it is especially helpful after dawn and before sunset.

The DRL system will turn OFF when:

1. The headlight switch is ON.
2. The parking brake is applied.
3. Engine stops.

D191002ABH

### Headlight leveling device (if equipped)

***Automatic type***

It automatically adjusts the headlight beam level according to the number of passengers and the loading weight in the luggage area.

It offers the proper headlight beam under various conditions.

**⚠ WARNING**

**If it is not working properly, have your vehicle inspected by an authorized HYUNDAI dealer.**

**Don't attempt to inspect yourself.**

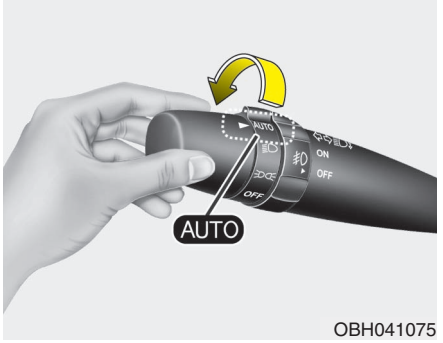


OBH041075

D191300ABH

### AFLS (Adaptive Front Lighting System) (if equipped)

Adaptive front lighting system uses the steering angle and vehicle speed, to keep your field of vision wide by swiveling and leveling the headlamp.

Turn the knob to the AUTO position when the engine is running. The adaptive front lighting system will operate when the headlamp is ON. To turn off the AFLS, turn the knob to the other position. After turning the AFLS off, headlamp swiveling no longer occurs, but leveling operates continuously.

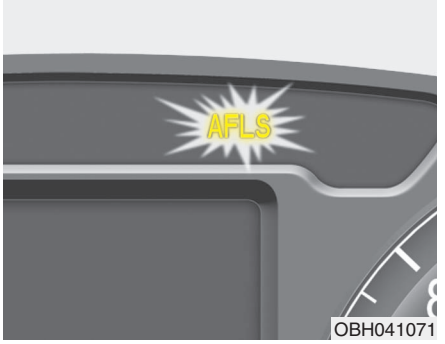


OBH041071

If the AFLS malfunction indicator comes on, the AFLS is not working properly. Drive to the nearest safe location and restart the engine. If the indicator continuously remains on, take your vehicle to an authorized HYUNDAI dealer and have the system checked.

## WIPERS AND WASHERS

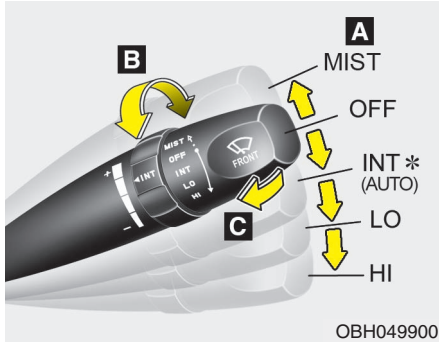


**A : Wiper speed control**

- MIST – Single wipe
- OFF – Off
- INT – Intermittent wipe
  AUTO – AUTO control wipe (if equipped)
- LO – Low wiper speed
- HI – High wiper speed

**B : Intermittent or Auto control wipe time adjustment**

**C : Wash with brief wipes**

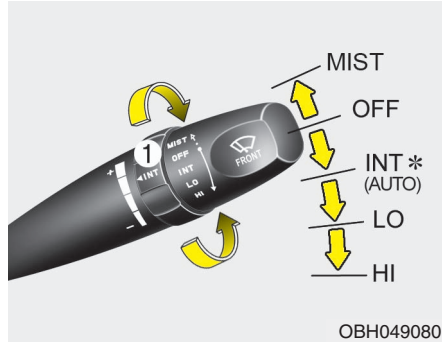


D200100AEN-EU

### Windshield wipers

Operates as follows when the ignition switch is turned ON.

MIST : For a single wiping cycle, push the lever upward and release it with the lever in the OFF position. The wipers will operate continuously if the lever is pushed upward and held.

OFF : Wiper is not in operation

INT : Wiper operates intermittently at the same wiping intervals. Use this mode in a light rain or mist. To vary the speed setting, turn the speed control knob(1).

LO : Normal wiper speed

HI : Fast wiper speed

### ✻ NOTICE

**If there is heavy accumulation of snow or ice on the windshield, defrost the windshield for about 10 minutes, or until the snow and/or ice is removed before using the windshield wipers to ensure proper operation.**

### ✻ NOTICE

- **When you operate the wipers, if your vehicle has a problem in any part of the wiper operation system, the wiper may operate in the LO mode regardless of the wiper switch position. In this case, have your vehicle checked by an authorized HYUNDAI dealer as soon as possible.**
- **When the ignition key is removed, the wiper blade sometimes may move slightly for reducing the deterioration of the windshield wipers.**

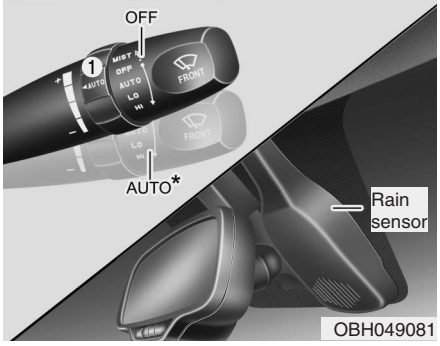


D200101AEN

### *Auto control (if equipped)*

The rain sensor located on the upper end of the windshield glass senses the amount of rainfall and controls the wiping cycle for the proper interval. The more it rains, the faster the wiper operates. When the rain stops, the wiper stops. To vary the speed setting, turn the speed control knob (1).

If the wiper switch is set in AUTO mode when the ignition switch is ON, the wiper will operate once to perform a self-check of the system. Set the wiper to OFF position when the wiper is not in use.

### ⚠ CAUTION

***When the ignition switch is ON and the windshield wiper switch is placed in the AUTO mode, use caution in the following situations to avoid any injury to the hands or other parts of the body:***

- ***Do not touch the upper end of the windshield glass facing the rain sensor.***
- ***Do not wipe the upper end of the windshield glass with a damp or wet cloth.***
- ***Do not put pressure on the windshield glass.***

### ⚠ CAUTION

***When washing the vehicle, set the wiper switch in the OFF position to stop the auto wiper operation.***

***The wiper may operate and be damaged if the switch is set in the AUTO mode while washing the vehicle.***

***Do not remove the sensor cover located on the upper end of the passenger side windshield glass. Damage to system parts could occur and may not be covered by your vehicle warranty.***

***When starting the vehicle in winter, set the wiper switch in the OFF position. Otherwise, wipers may operate and ice may damage the windshield wiper blades. Always remove all snow and ice and defrost the windshield properly prior to operating the windshield wipers.***

OBH049082

D200200AUN

## Windshield washers

In the OFF position, pull the lever gently toward you to spray washer fluid on the windshield and to run the wipers 1-3 cycles.

Use this function when the windshield is dirty.

The spray and wiper operation will continue until you release the lever.

If the washer does not work, check the washer fluid level. If the fluid level is not sufficient, you will need to add appropriate non-abrasive windshield washer fluid to the washer reservoir.

The reservoir filler neck is located in the front of the engine compartment on the passenger side.

### ⚠ CAUTION

***To prevent possible damage to the washer pump, do not operate the washer when the fluid reservoir is empty.***

### ⚠ WARNING

**Do not use the washer in freezing temperatures without first warming the windshield with the defrosters; the washer solution could freeze on contact with the windshield and obscure your vision.**

### ⚠ CAUTION

- ***To prevent possible damage to the wipers or windshield, do not operate the wipers when the windshield is dry.***
- ***To prevent damage to the wiper blades, do not use gasoline, kerosene, paint thinner, or other solvents on or near them.***
- ***To prevent damage to the wiper arms and other components, do not attempt to move the wipers manually.***

## INTERIOR LIGHT

D210000AEN

**⚠ CAUTION**

***Do not use the interior lights for extended periods when the engine is not running.***

***It may cause battery discharge.***

**⚠ WARNING**

**Do not use the interior lights when driving in the dark. Accidents could happen because the view may be obscured by interior lights.**

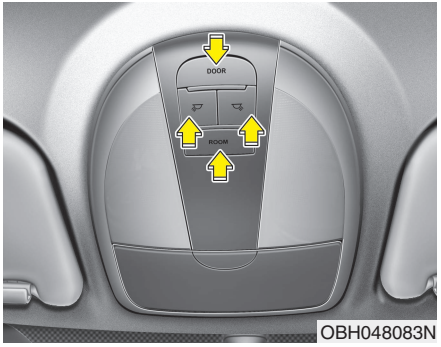


OBH048083N

D210100ABH-EU

### Map lamp

- : Push the switch to turn the map lamp on or off. This light produces a spot beam for convenient use as a map lamp at night or as a personal lamp for the driver and the front passenger.

- DOOR : In the DOOR position, the map lamp and the room lamp come on when any door is opened regardless of the ignition switch position.

  When doors are unlocked by the transmitter (or smart key), the map lamp and the room lamp come on for approximately 30 seconds as long as any door is not open. The map lamp and the room lamp goes out gradually after approximately 30 seconds if the door is closed. However, if the ignition switch is ON or all doors are locked, the map lamp and the room lamp will turn off immediately. If a door is opened with the ignition switch in the ACC or LOCK position, the map lamp and the room lamp stays on for about 20 minutes. However, if a door is opened with the ignition switch in the ON position, the map lamp and the room lamp stays on continuously.

  Also, if you turn the engine start/stop button off or remove the ignition key from the ignition switch when the room lamp is in off position with all doors closed, the room lamp will turn on.

- ROOM : Push the switch to turn the map lamp and the room lamp on or off.

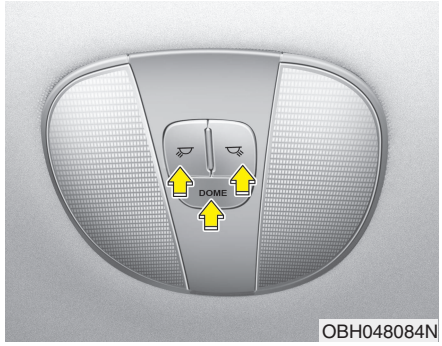

OBH048084N

D210200ABH-EU

## Room lamp

- : Push the switch to turn the room lamp on or off. This light produces a spot beam for convenient use as a room lamp at night or as a personal lamp for the rear passenger.
- DOME : Push the switch to turn the room lamp on or off.

**⚠ CAUTION**

***Do not leave the lamp switches on for an extended period of time when the vehicle is not running.***

OBH048085

D210300ABH

## Trunk room lamp

The trunk room lamp comes on when the trunk is opened.

**⚠ CAUTION**

***The trunk room lamp comes on as long as the trunk lid opens. To prevent unnecessary charging system drain, close the trunk lid securely after using the trunk room.***

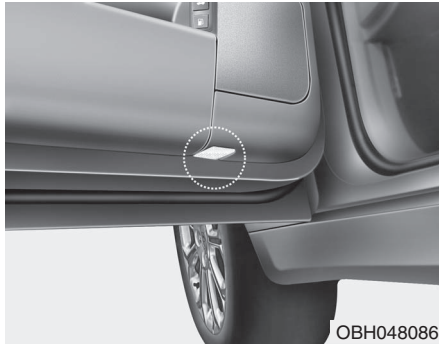
OBH048086

D210400AEN

## Door courtesy lamp (if equipped)

The door courtesy lamp comes ON when the door is opened to assist entering or exiting the vehicle. It also serves as a warning to passing vehicles that the vehicle door is open.

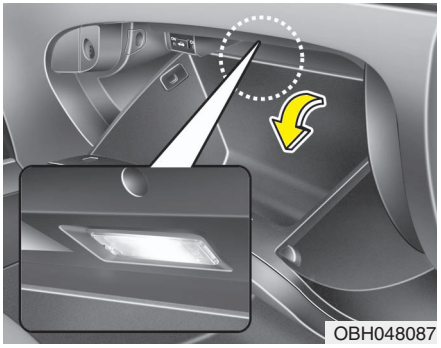


D210500ABH

## Glove box lamp

The glove box lamp comes on when the glove box is opened.

**⚠ CAUTION**

***To prevent unnecessary charging system drain, close the glove box securely after using the glove box.***

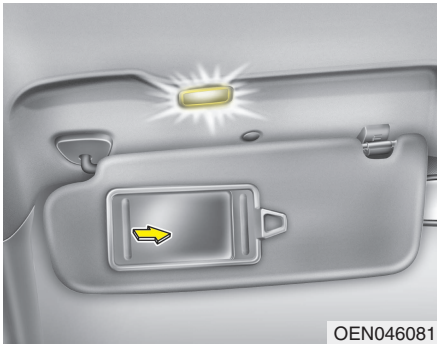


D210600AUN

## Vanity mirror lamp

Opening the lid of the vanity mirror will automatically turn on the mirror light.

**⚠ CAUTION**

***To prevent unnecessary charging system drain, close the vanity mirror cover after using the mirror.***

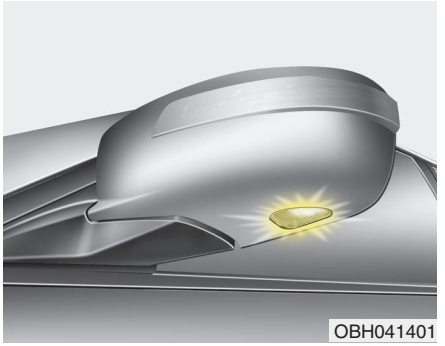


## Welcome light (if equipped)

When all the doors (and trunk) are locked and closed, the puddle lamp will come on for about 15 seconds if any of the below is performed.

- When the door unlock button is pressed on the transmitter.
- When the door unlock button is pressed on the smart key.
- When the button of the outside door handle is pressed.
- When the vehicle is approached with the smart key in possession.

But, if you don't lock or unlock the doors for 14 days after you lock the doors, the light does not come on. Press the door unlock button on the transmitter/smart key or press the button of the front outside door handle. The welcome light will illuminate.

## DEFROSTER

D220000AUN

### ⚠ CAUTION

***To prevent damage to the conductors bonded to the inside surface of the rear window, never use sharp instruments or window cleaners containing abrasives to clean the window.***

### ✻ NOTICE

**If you want to defrost and defog the front windshield, refer to "Windshield defrosting and defogging" in this section.**

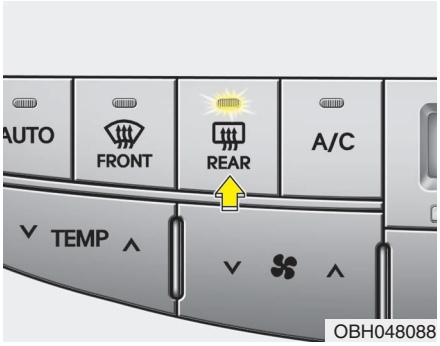

OBH048088

D220100AEN

### Rear window defroster

The defroster heats the window to remove frost, fog and thin ice from the rear window, while the engine is running.

To activate the rear window defroster, press the rear window defroster button located in the center facia switch panel. The indicator on the rear window defroster button illuminates when the defroster is ON.

If there is heavy accumulation of snow on the rear window, brush it off before operating the rear defroster.

The rear window defroster automatically turns off after approximately 20 minutes or when the ignition switch is turned off. To turn off the defroster, press the rear window defroster button again.

D220101AEN

#### *Outside rearview mirror defroster (if equipped)*

If your vehicle is equipped with the outside rearview mirror defrosters, they will operate at the same time you turn on the rear window defroster.

D220200AEN

### Front wiper deicer (if equipped)

If your vehicle is equipped with the front wiper deicer, it will be operating at the same time you operate the rear window defroster.

## AUTOMATIC CLIMATE CONTROL SYSTEM

■ **Type A**

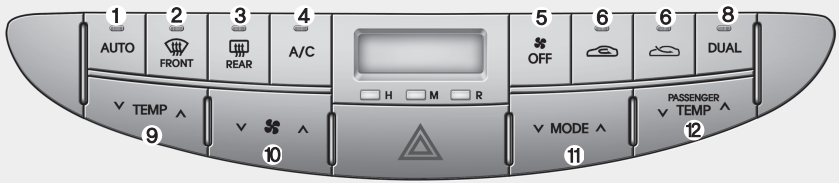


■ **Type B**

1. AUTO (automatic control) button
2. Front windshield defrost button
3. Rear window defrost button
4. Air conditioning button
5. OFF button
6. Air intake control button
7. AQS (Air quality system) button (if equipped)
8. Dual temperature control selection button
9. Driver's temperature control button
10. Fan speed control button
11. Mode selection button
12. Passenger's temperature control button

OBH042089N/OBH048089N

D240000ABH-EU

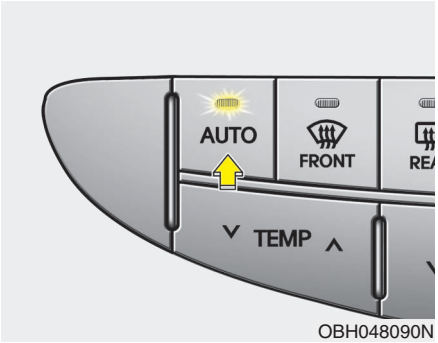

OBH048090N

D240100ABH

## Automatic heating and air conditioning

The automatic climate control system is controlled by simply setting the desired temperature.

The Full Automatic Temperature Control (FATC) system automatically controls the heating and cooling system as follows;

1. Push the AUTO button. The modes, fan speeds, air intake and air-conditioning will be controlled automatically by temperature setting.
2. Push the TEMP button to set the desired temperature.
   If the temperature is set to the lowest setting (Lo), the air conditioning system will operate continuously.
3. To turn the automatic operation off, press any button except the temperature control button. If you press the mode selection button, air conditioning button, defrost button or air intake control button, or the fan speed button, the selected function will be controlled manually while other functions operate automatically.

For your convenience and to improve the effectiveness of the climate control, use the AUTO button and set the temperature to 73°F (23°C).

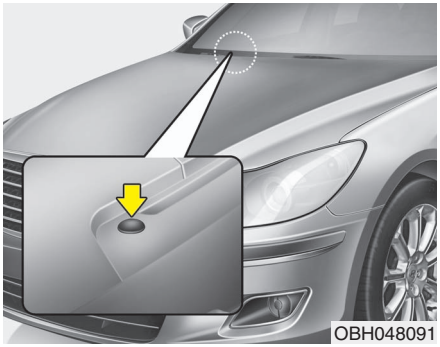
OBH048091

### ✻ NOTICE

**Never place anything over the sensor located on the instrument panel to ensure better control of the heating and cooling system.**

D240200ABH

## Manual heating and air conditioning

The heating and cooling system can be controlled manually by pushing buttons other than the AUTO button. In this case, the system works sequentially according to the order of buttons selected.

### ✻ NOTICE

**When pressing any button except the AUTO button while using automatic operation, the functions not selected will continue to be controlled automatically.**

1. Start the engine.
2. Set the mode to the desired position.
   For improving the effectiveness of heating and cooling;
   - Heating:
   - Cooling:
3. Set the temperature control to the desired position.
4. Set the air intake control to the outside (fresh) air position.
5. Set the fan speed control to the desired speed.
6. If air conditioning is desired, turn the air conditioning system on.

Press the AUTO button in order to resume to full automatic control of the system.

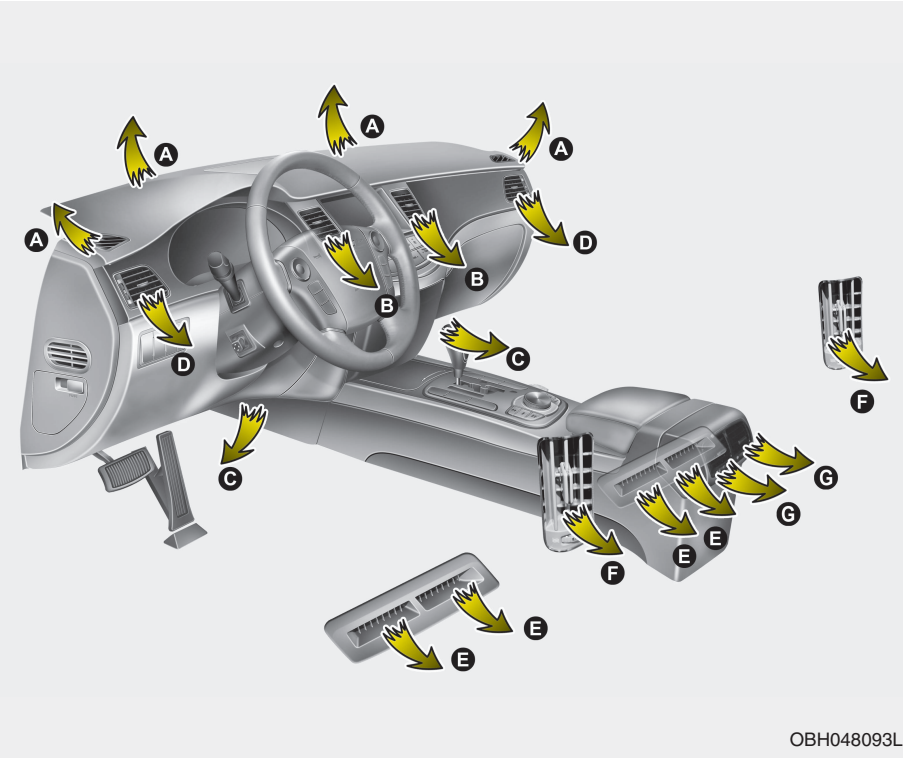

OBH048093L

**❋ Rear outlet vents (F)**

- The air flow of the Rear outlet vents is delivered by the front climate control system and delivered through the inside air duct of the front doors. If the door is open or not closed completely, the air flow of the Rear outlet vent is not delivered properly. Make sure the front doors are closed completely.
- The air flow of the Rear outlet vents may be weaker than the instrument panel vents due to the long air duct in the front doors.

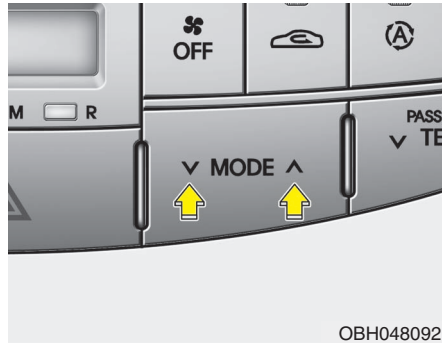


D240201ABH

***Mode selection***

The mode selection button controls the direction of the air flow through the ventilation system.

The air flow direction is cycled as follows:

**Face-Level (B, C, D, E, F, G)**

Air flow is directed toward the upper body and face. Additionally, each outlet can be controlled to direct the air discharged from the outlet.

**Bi-Level (B, C, D, E, F, G)**

Air flow is directed towards the face and the floor.

**Floor-Level (A, C, D, E, F, G)**

Most of the air flow is directed to the floor, with a small amount of the air being directed to the windshield and side window defrosters.

**Floor & Defrost (A, C, D, E, F, G)**

Most of the air flow is directed to the floor and the windshield with a small amount directed to the side window defrosters.

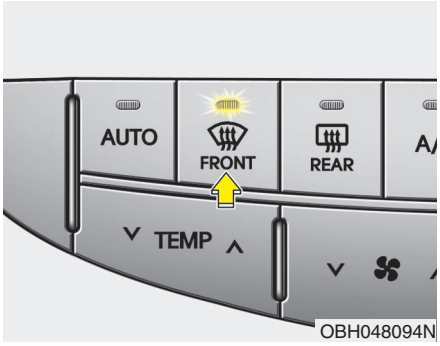


**Defrost-Level (A, D)**

Most of the air flow is directed to the windshield with a small amount of air directed to the side window defrosters.

## ✻ NOTICE

**The defrost mode is more effective when a warmer air temperature setting is selected.**

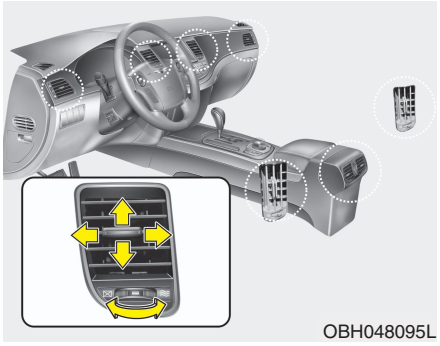


**Instrument panel vents**

The outlet vents can be opened or closed separately using the horizontal thumbwheel. To close the vent, rotate it left to the maximum position. To open the vent, rotate it right to the desired position.

Also, you can adjust the direction of air delivery from these vents using the vent control lever as shown.

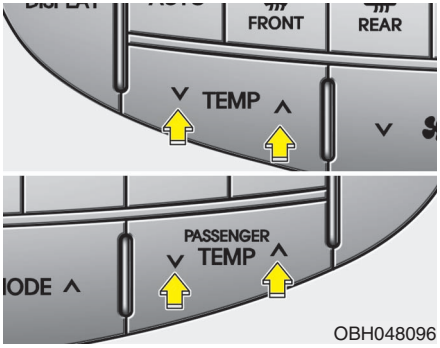


D240202ABH-EU

***Temperature control***

The temperature will increase to the maximum (HI) by pushing the up (∧) button.

The temperature will decrease to the minimum (Lo) by pushing the down (∨) button.

When pushing the button, the temperature will increase or decrease by 1°F/0.5°C. When set to the lowest temperature setting, the air conditioning will operate continuously.

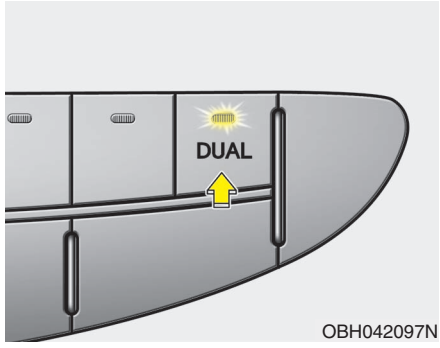

OBH042097N

**Adjusting the driver and passenger side temperature individually**

1. Press the DUAL button to operate the driver and passenger side temperature individually. Pressing the right temperature control button will automatically switch to the DUAL mode as well.
2. Press the left temperature control to adjust the driver side temperature. Press the right temperature control to adjust the passenger side temperature.

When the driver side temperature is set to the highest (HI) or lowest (Lo) temperature setting, the DUAL mode is deactivated for maximum heating or cooling.

**Adjusting the driver and passenger side temperature equally**

1. Press the DUAL button again to deactivate DUAL mode. The passenger side temperature will be set to the same temperature as the driver side temperature.
2. Press the left temperature control button. The driver and passenger side temperature will be adjusted equally.

**Temperature conversion**

If the battery has been discharged or disconnected, the temperature mode display will reset to Fahrenheit.

This is a normal condition. You can switch the temperature mode between Fahrenheit to Centigrade as follows;

While pressing the MODE button, depress the DUAL button for 3 seconds or more. The display will change from Fahrenheit to Centigrade, or from Centigrade to Fahrenheit.

■ Type A

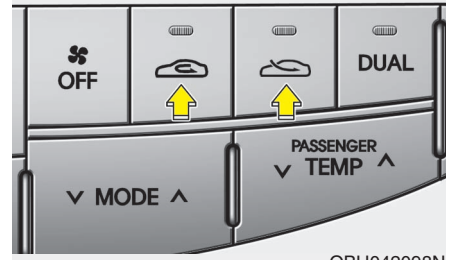

OBH042098N

■ Type B

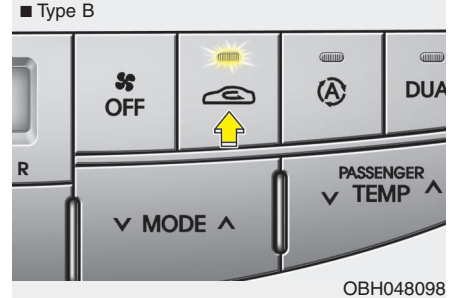

OBH048098

D240203AEN

### *Air intake control*

This is used to select the outside (fresh) air position or recirculated air position.

To change the air intake control position, push the control button.

**Recirculated air position**

With the recirculated air position selected, air from the passenger compartment will be drawn through the heating system and heated or cooled according to the function selected.

**Outside (fresh) air position**

■ Type A

■ Type B

With the outside (fresh) air position selected, air enters the vehicle from outside and is heated or cooled according to the function selected.

## ✻ NOTICE

**Prolonged operation of the heater in the recirculated air position (without air conditioning selected) may cause fogging of the windshield and side windows and the air within the passenger compartment may become stale.**
**In addition, prolonged use of the air conditioning with the recirculated air position selected will result in excessively dry air in the passenger compartment.**

## ⚠ WARNING

- **Continued use of the climate control system operation in the recirculated air position may allow humidity to increase inside the vehicle which may fog the glass and obscure visibility.**
- **Do not sleep in a vehicle with the air conditioning or heating system on. It may cause serious harm or death due to a drop in the oxygen level and/or body temperature.**
- **Continued use of the climate control system operation in the recirculated air position can cause drowsiness or sleepiness, and loss of vehicle control. Set the air intake control to the outside (fresh) air position as much as possible while driving.**

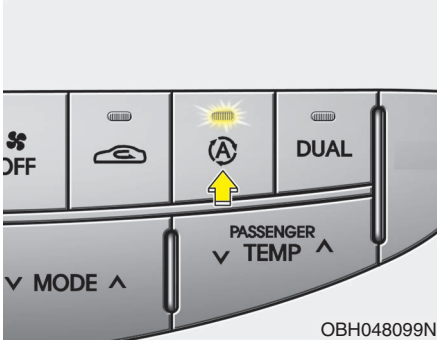


D240204ABH

### *Air quality System (if equipped)*

The air inflow from outside the vehicle can be automatically controlled. Press the button to activate the air quality control system.

When using AQS mode, AQS(Air Quality System) automatically senses outdoor air pollutants and minimizes them from entering the vehicle, however, unpleasant or foul odors that might be present may still be noticeable within the vehicle.

**Exhaust gas cutoff mode :**

Air enters the vehicle from the outside.

If exhaust gas enters the vehicle from the outside, the exhaust gas cutoff mode of the Air Quality System automatically switches from the outside air position to the recirculated air position to prevent exhaust gas from entering the vehicle.

## ✻ NOTICE

**It should be noted that prolonged operation of the heating system in recirculation mode will give rise to misting of the windshield and side windows and the air within the passenger compartment will become stale. In addition, prolonged use of the air conditioning with the recirculation mode selected may result in the air within the passenger compartment becoming excessively dry.**

## ⚠ CAUTION

***If the windows fog up with the Recirculation or A.Q.S mode selected, set the air intake control to the fresh air position or A.Q.S control to OFF.***

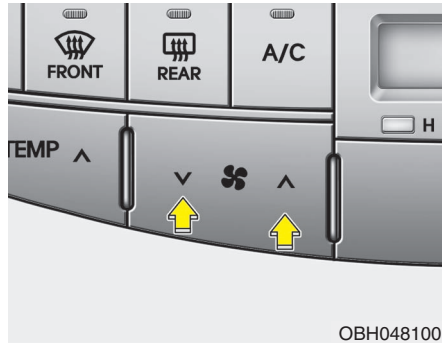


D240205ABH

### *Fan speed control*

The fan speed can be set to the desired speed by pushing the fan speed control button.

The higher the fan speed is, the more air is delivered.

Pressing the OFF button turns off the fan.

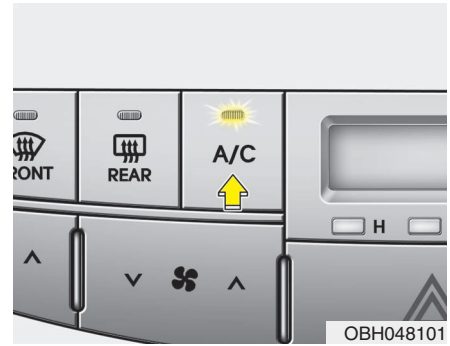


D240206AUN

### *Air conditioning*

Push the A/C button to manually turn the air conditioning system on (indicator light will illuminate).

Push the button again to turn the air conditioning system off.

## ✻ NOTICE

**When AUTO mode and the desired temperature has been selected, the Full Automatic Temperature Control (FATC) will select the A/C operation automatically in the background. The A/C button is not illuminated at all times during AUTO mode operation.**

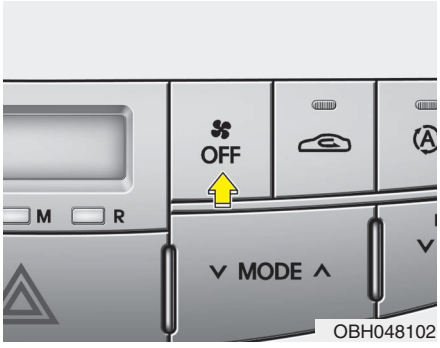


D240208AUN

***OFF mode***

Push the OFF button to turn off the air climate control system. However, you can still operate the mode and air intake buttons as long as the ignition switch is in the ON position.

## System operation

D230501AUN

***Ventilation***

1. Set the mode to the position.
2. Set the air intake control to the outside (fresh) air position.
3. Set the temperature control to the desired position.
4. Set the fan speed control to the desired speed.

D230502AEN

***Heating***

1. Set the mode to the position.
2. Set the air intake control to the outside (fresh) air position.
3. Set the temperature control to the desired position.
4. Set the fan speed control to the desired speed.
5. If dehumidified heating is desired, turn the air conditioning system on.

- If the windshield fogs up, set the mode to the or position.

**Operation Tips**

- To keep dust or unpleasant fumes from entering the car through the ventilation system, temporarily set the air intake control to the recirculated air position. Be sure to return the control to the fresh air position when the irritation has passed to keep fresh air in the vehicle. This will help keep the driver alert and comfortable.
- Air for the heating/cooling system is drawn in through the grilles just ahead of the windshield. Care should be taken that these are not blocked by leaves, snow, ice or other obstructions.
- To prevent interior fog on the windshield, set the air intake control to the fresh air position and fan speed to the desired position, turn on the air conditioning system, and adjust the temperature control to desired temperature.

D230503AEN

### *Air conditioning*

All HYUNDAI Air Conditioning Systems are filled with environmentally friendly R-134a refrigerant which does not damage the ozone layer.

1. Start the engine. Push the air conditioning button.
2. Set the mode to the position.
3. Set the air intake control to the outside air or recirculated air position.
4. Adjust the fan speed control and temperature control to maintain maximum comfort.

### ✻ NOTICE

- **When using the air conditioning system, monitor the engine temperature gauge closely while driving up hills or in heavy traffic when outside temperatures are high. Air conditioning system operation may cause engine overheating. Continue to use the blower fan but turn the air conditioning system off if the engine temperature gauge indicates engine overheating.**
- **When opening the windows in humid weather air conditioning may create water droplets inside the vehicle. Since excessive water droplets may cause damage to electrical equipment, air conditioning should only be operated with the windows closed.**

**Air conditioning system operation tips**

- If the vehicle has been parked in direct sunlight during hot weather, open the windows for a short time to let the hot air inside the vehicle escape.
- To help reduce moisture inside of the windows on rainy or humid days, decrease the humidity inside the vehicle by operating the air conditioning system.
- During air conditioning system operation, you may occasionally notice a slight change in engine speed as the air conditioning compressor cycles. This is a normal system operation characteristic.
- Use the air conditioning system every month only for a few minutes to ensure maximum system performance.

- When using the air conditioning system, you may notice clear water dripping (or even puddling) on the ground under the passenger side of the vehicle. This is a normal system operation characteristic.
- Operating the air conditioning system in the recirculated air position provides maximum cooling, however, continual operation in this mode may cause the air inside the vehicle to become stale.

  After sufficient cooling has been achieved, switch back from the recirculated air to the fresh outside air position.
- During cooling operation, you may occasionally notice a misty air flow because of rapid cooling and humid air intake. This is a normal system operation characteristic.

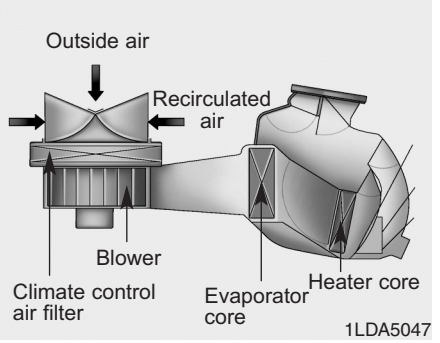


D230300AEN

### Climate control air filter

The climate control air filter installed behind the glove box filters the dust or other pollutants that come into the vehicle from the outside through the heating and air conditioning system. If dust or other pollutants accumulate in the filter over a period of time, the air flow from the air vents may decrease, resulting in moisture accumulation on the inside of the windshield even when the outside (fresh) air position is selected. If this happens, have the climate control air filter replaced by an authorized HYUNDAI dealer.

### ✻ NOTICE

- **Replace the filter every 15,000 miles (24,000 km) or once a year.**
  **If the car is being driven in severe conditions such as dusty or rough roads, more frequent air conditioner filter inspections and changes are required.**
- **When the air flow rate suddenly decreases, the system should be checked at an authorized HYUNDAI dealer.**

D230400AEN

### Checking the amount of air conditioner refrigerant and compressor lubricant

When the amount of refrigerant is low, the performance of the air conditioning is reduced. Overfilling also has a negative impact on the air conditioning system.

Therefore, if abnormal operation is found, have the system inspected by an authorized HYUNDAI dealer.

### ✻ NOTICE

**It is important when servicing the air conditioning system that the correct type and amount of oil and refrigerant is used. Otherwise, damage to the compressor and abnormal system operation may occur.**

### ⚠ WARNING

**The air conditioning system should be serviced by an authorized HYUNDAI dealer. Improper service may cause serious injury to the person performing the service.**

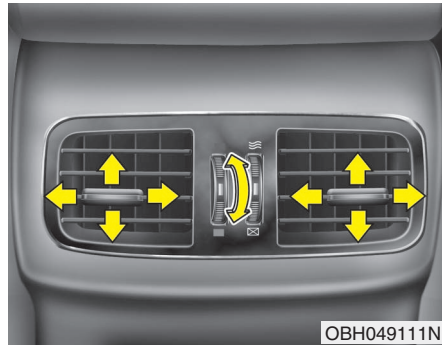


D231000BBH-EU

### Rear vent

It will operate at the same time when you operate the climate control system.

You can adjust the temperature by turning the temperature control knob. Turn the knob to the red mark when warm air is desired, or to the blue mark when cool air is desired.

The outlet vents can be opened or closed using the thumbwheel. To close the vent, rotate it down to the maximum position. To open the vent, rotate it up to the desired position.

Also, you can adjust the direction of air delivery from these vents using the vent control lever as shown.

## WINDSHIELD DEFROSTING AND DEFOGGING

D250000AEN

**⚠ WARNING - Windshield heating**

**Do not use the or position during cooling operation in extremely humid weather. The difference between the temperature of the outside air and that of the windshield could cause the outer surface of the windshield to fog up, causing loss of visibility could cause an accident resulting in serious injury or death. In this case, set the mode selection knob or button to the position and fan speed control knob or button to a lower speed.**

- For maximum defrosting, set the temperature control to the extreme right/hot position and the fan speed control to the highest speed.
- If warm air to the floor is desired while defrosting or defogging, set the mode to the floor-defrost position.
- Before driving, clear all snow and ice from the windshield, rear window, outside rear view mirrors, and all side windows.
- Clear all snow and ice from the hood and air inlet in the cowl grill to improve heater and defroster efficiency and to reduce the probability of fogging up the inside of the windshield.

### ✻ NOTICE

**If the engine temperature is still cold after starting, then a brief engine warm up period may be required for the vented air flow to become warm or hot.**

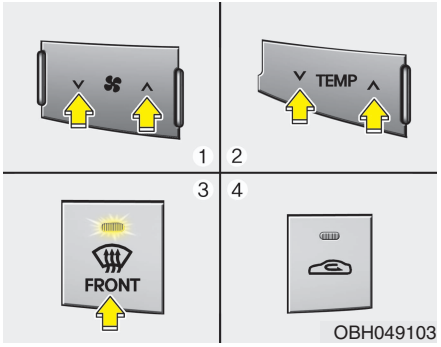


D250201AEN-EU

***To defog inside windshield***

1. Select desired fan speed.
2. Select desired temperature.
3. Press the defrost button ( ).
4. The outside (fresh) air position will be selected automatically.

If the outside (fresh) air position is not selected automatically, adjust the corresponding button manually.

If the position is selected, lower fan speed is adjusted to a higher fan speed.

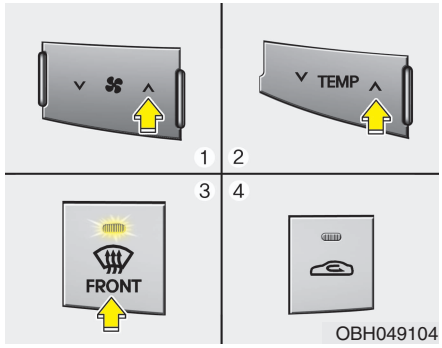


D250202AEN-EU

***To defrost outside windshield***

1. Set the fan speed to the highest (extreme right) position.
2. Set the temperature to the extreme hot (HI) position.
3. Press the defrost button ( ).
4. The outside (fresh) air position will be selected automatically.

If the position is selected, lower fan speed is adjusted to a higher fan speed.

D250300AUN-EU

## Defogging logic

To reduce the possibility of fogging up the inside of the windshield, the air intake is controlled automatically according to certain conditions such as or position. To cancel or return the defogging logic, perform the following steps:

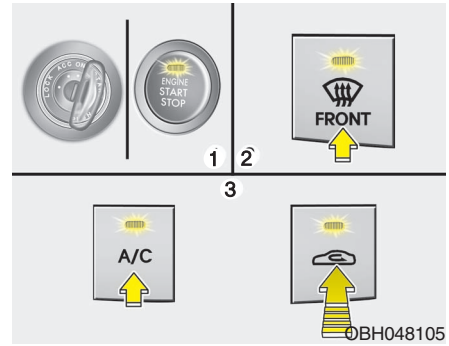


D250302AUN

1. Turn the ignition switch to the ON position.
2. Select the defrost position pressing defrost button ( ).
3. While holding the air conditioning button (A/C) pressed, press the air intake control button at least 5 times within 3 seconds.

The indicator on the air intake control button blinks 3 times with 0.5 second of interval. It indicates that the defogging logic is canceled or returned to the programmed status.

If the battery has been discharged or disconnected, the system resets to the preprogrammed defogging logic.

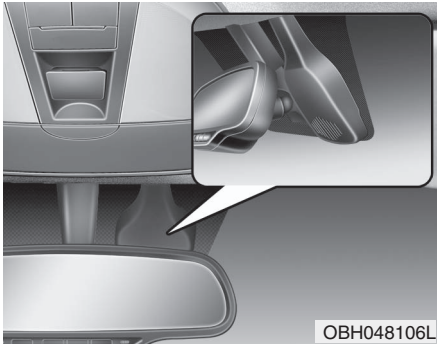


D250305ABH

***Auto defogging system (if equipped)***

Auto defogging reduces the probability of fogging up the inside of the windshield by automatically sensing the moisture on the inside of the windshield.

The auto defogging system operates when the heater or air conditioning is on.

This indicator illuminates when the auto defogging system senses the moisture on the inside of the windshield and operates.

If higher level of moisture has been sensed in the vehicle, the auto defogging system will operate in the following order. For example if auto defogging does not defog inside the windshield at step 1 Outside air position, it tries to defog again at step 2 Blowing air toward the windshield.

Step 1 : Outside air position
Step 2 : Blowing air toward the windshield
Step 3 : Increasing air flow toward the windshield
Step 4 : Operating the air conditioning
Step 5 : Maximizing the air conditioning

If your vehicle is equipped with the auto defogging system, it is automatically activated when the conditions are met. However, if you would like to cancel the auto defogging system, press the front defroster button 4 times within 2 seconds while pressing the AUTO button. The indicator will blink 3 times to notify you that the system is cancelled. To use the auto defogging system again, follow the procedures mentioned above.

If the battery has been disconnected or discharged, it resets to the auto defogging status.

## ✻ NOTICE

- **If the A/C off or recirculated air position is manually selected while the auto defogging system is on, the auto defogging indicator will blink 3 times to give notice that manual operation is canceled.**
- **If the air quality system (AQS) is selected while the auto defogging system is operating at the step 1 outside air position, the recirculated air position may operate when the outside air is polluted.**

## ⚠ CAUTION

***Do not remove the sensor cover located on the upper end of the passenger side windshield glass. Damage to system parts could occur and may not be covered by your vehicle warranty.***

## STORAGE COMPARTMENTS

D270000AUN

These compartments can be used to store small items required by the driver or passengers.

### ⚠ CAUTION

- ***To avoid possible theft, do not leave valuables in the storage compartments.***
- ***Always keep the storage compartment covers closed while driving. Do not attempt to place so many items in the storage compartment that the storage compartment cover cannot close securely.***

### ⚠ WARNING - Flammable materials

**Do not store cigarette lighters, propane cylinders, or other flammable/explosive materials in the vehicle. These items may catch fire and/or explode if the vehicle is exposed to hot temperatures for extended periods.**

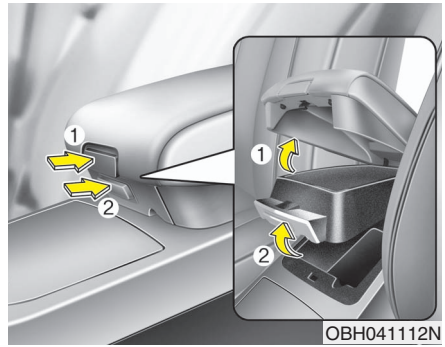


D270100ABH

### Center console storage

These compartments can be used to store small items required by the driver or front passenger.

To open the center console storage, push the button (1) or (2).

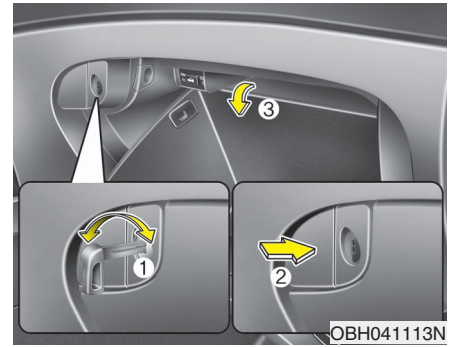


D270200ABH

### Glove box

The glove box can be locked and unlocked with a master key (or the mechanical key of the smart key) (1).

To open the glove box, push the button (2) and the glove box will automatically open (3). Close the glove box after use.

**⚠ WARNING**

**To reduce the risk of injury in an accident or sudden stop, always keep the glove box door closed while driving.**

**⚠ CAUTION**

***Do not keep food in the glove box for a long time.***

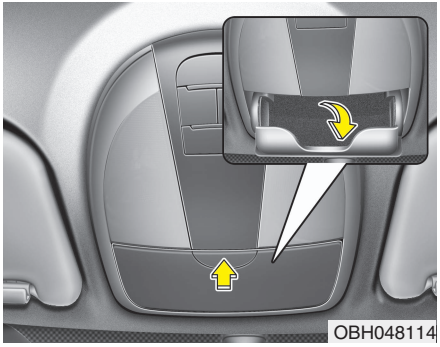


D270300AUN

## Sunglass holder

To open the sunglass holder, press the cover and the holder will slowly open. Place your sunglasses in the compartment door with the lenses facing out. Push to close.

**⚠ WARNING**

- **Do not keep objects except sunglasses inside the sunglass holder. Such objects can be thrown from the holder in the event of a sudden stop or an accident, possibly injuring the passengers in the vehicle.**
- **Do not open the sunglass holder while the vehicle is moving. The rear view mirror of the vehicle can be blocked by an open sunglass holder.**

## INTERIOR FEATURES

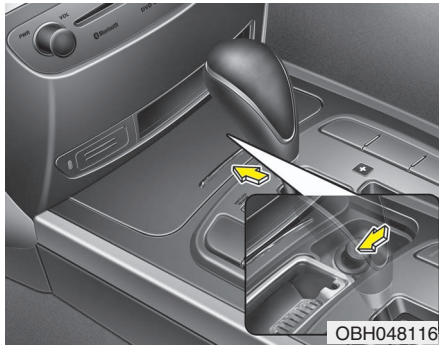


D280100ABH

### Cigarette lighter

For the cigarette lighter to work, the ignition switch must be in the ACC position or the ON position.

To open the cover, push the cover forward.

To use the cigarette lighter, push it all the way into its socket. When the element has heated, the lighter will pop out to the "ready" position.

If it is necessary to replace the cigarette lighter, use only a genuine HYUNDAI replacement or its approved equivalent.

**⚠ WARNING**

- **Do not hold the lighter in after it is already heated because it will overheat.**
- **If the lighter does not pop out within 30 seconds, remove it to prevent overheating.**

**⚠ CAUTION**

***Only a genuine HYUNDAI lighter should be used in the cigarette lighter socket. The use of plug-in accessories (shavers, hand-held vacuums, and coffee pots, etc.) may damage the socket or cause electrical failure.***

D280200ABH

### Ashtray

**⚠ WARNING - Ashtray use**

- **Do not use the vehicle's ashtrays as waste receptacles.**
- **Putting lit cigarettes or matches in an ashtray with other combustible materials may cause a fire.**

To open the cover, push the cover forward. To clean the ashtray, the plastic receptacle should be removed by lifting the plastic ash receptacle upward and pulling it out.

D280300ABH-EU

## Cup holder

**⚠ WARNING - Hot liquids**

- **Do not place uncovered cups of hot liquid in the cup holder while the vehicle is in motion. If the hot liquid spills, you could be burned. Such a burn to the driver could lead to loss of control of the vehicle.**
- **To reduce the risk of personal injury in the event of sudden stop or collision, do not place uncovered or unsecured bottles, glasses, cans, etc., in the cup holder while the vehicle is in motion.**

**⚠ WARNING**

**Keep cans or bottles out of direct sun light and do not put them in a vehicle that is heated up. It may explode.**

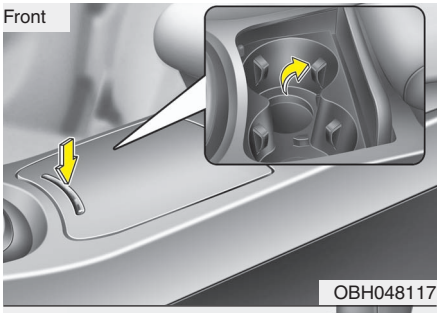


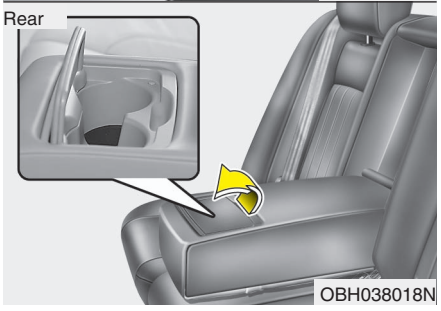


Cups or small beverage cans may be placed in the cup holders.

**Front**

To open the cover, press the cover and it will slowly open.

**Rear**

To open the cover, pull the cover.

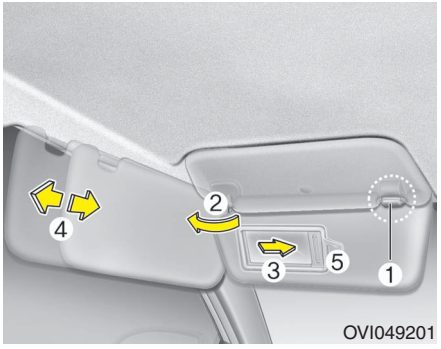


## Sunvisor

Use the sunvisor to shield direct light through the front or side windows.

To use the sunvisor, pull it downward.

To use the sunvisor for the side window, pull it downward, unsnap it from the bracket (1) and swing it to the side (2).

To use the vanity mirror, pull down the visor and slide the mirror cover (3).

Adjust the sunvisor extension forward or backward (4).

The ticket holder (5) is provided for holding a tollgate ticket. (if equipped)

**⚠ CAUTION - Vanity mirror lamp**

***Close the vanity mirror cover securely and return the sunvisor to its original position after use. If the vanity mirror is not closed securely, the lamp will stay on and could result in battery discharge and possible sunvisor damage.***

**⚠ WARNING**

**For your safety, do not obstruct your vision when using the sunvisor.**

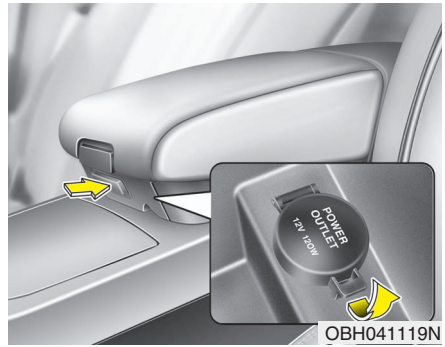


D280500AEN

## Power outlet

The power outlet is designed to provide power for mobile telephones or other devices designed to operate with vehicle electrical systems. The devices should draw less than 10 amps with the engine running.

**⚠ CAUTION**

- ***Use the power outlet only when the engine is running and remove the accessory plug after use. Using the accessory plug for prolonged periods of time with the engine off could cause the battery to discharge.***
- ***Only use 12V electric accessories which are less than 10A in electric capacity.***
- ***Adjust the air-conditioner or heater to the lowest operating level when using the power outlet.***
- ***Close the cover when not in use.***
- ***Some electronic devices can cause electronic interference when plugged into a vehicle's power outlet. These devices may cause excessive audio static and malfunctions in other electronic systems or devices used in your vehicle.***

**⚠ WARNING**

**Do not put a finger or a foreign element (pin, etc.) into a power outlet and do not touch with a wet hand. You may get an electric shock.**

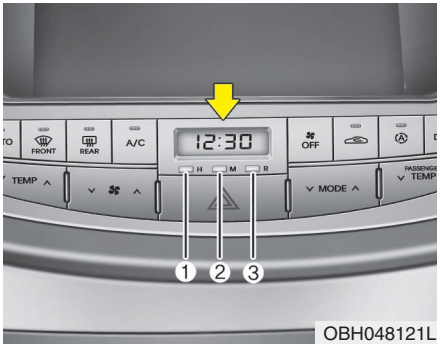


OBH048121L

D280600AEN

## Digital clock

**⚠ WARNING**

**Do not adjust the clock while driving. You may lose your steering control and cause an accident that results in severe personal injury or death.**

Whenever the battery terminals or related fuses are disconnected, you must reset the time.

When the ignition switch is in the ACC or ON position, the clock buttons operate as follows:

D280601AUN

### *Hour (1)*

Pressing the H button with your finger, a pencil or similar object will advance the time displayed by one hour.

D280602AUN

### *Minute (2)*

Pressing the M button with your finger, a pencil or similar object will advance the time displayed by one minute.

D280603ABH

### *Reset (3)*

To clear away minutes, press the R button with your finger, a pencil or similar object. Then the clock will be set precisely on the hour.

For example, if the R button is pressed while the time is between 9:01 and 9:29, the display will be reset to 9:00.

9:01 ~ 9:29 display changed to 9:00

9:30 ~ 9:59 display changed to 10:00

D280604AEN

***Display conversion***

To change the 12 hour format to the 24 hour format, press the R button until the display blinks.

For example, if the R button is pressed while the time is 10:15 p.m., the display will be changed to 22:15.

Type A

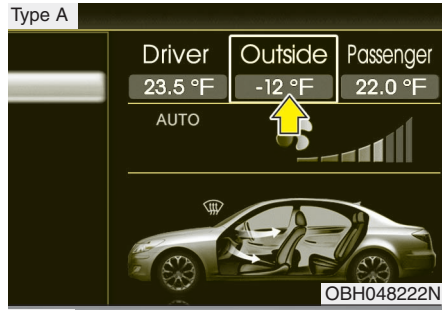


OBH048222N

Type B

OBH041400N

D281200ABH

## Outside thermometer

The current outside temperature is displayed in 1°F (1°C) increments. The temperature range is between -30°F~140°F (-30°C ~ 60°C).

- If the battery has been discharged or disconnected, the temperature mode display will reset to Fahrenheit.

  This is a normal condition. You can switch the temperature mode between Fahrenheit to Centigrade as follows;

  While pressing the MODE button, depress the DUAL button for 3 seconds or more. The display will change from Fahrenheit to Centigrade, or from Centigrade to Fahrenheit.
- The outside temperature on the display may not change immediately like a general thermometer to prevent the driver from being inattentive.

D280800AEN

## Clothes hanger (if equipped)

**⚠ CAUTION**

***Do not hang heavy clothes, since those may damage the hook.***

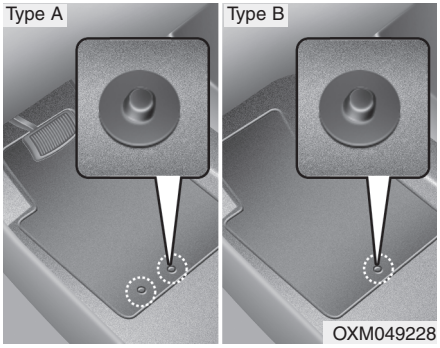


B571A03Y-AAT

## Floor mat anchor(s) (if equipped)

When using a floor mat on the front floor carpet, make sure it attaches to the floor mat anchor(s) in your vehicle. This keeps the floor mat from sliding forward.

**⚠ WARNING**

**The following must be observed when installing ANY floor mat to the vehicle.**

- **Ensure that the floor mats are securely attached to the vehicle's floor mat anchor(s) before driving the vehicle.**
- **Do not use ANY floor mat that cannot be firmly attached to the vehicle's floor mat anchors.**
- **Do not stack floor mats on top of one another (e.g. all-weather rubber mat on top of a carpeted floor mat). Only a single floor mat should be installed in each position.**

**IMPORTANT - Your vehicle was manufactured with driver's side floor mat anchors that are designed to securely hold the floor mat in place. To avoid any interference with pedal operation, HYUNDAI recommends that only the HYUNDAI floor mat designed for use in your vehicle be installed.**

D281000AEN

## Luggage net (holder) (if equipped)

To keep items from shifting in the cargo area, you can use the 4 holders located in the cargo area to attach the luggage net.

### ⚠ CAUTION

***To prevent damage to the goods or the vehicle, care should be taken when carrying fragile or bulky objects in the luggage compartment.***

### ⚠ WARNING

**Avoid eye injury. DO NOT overstretch the luggage net, ALWAYS keep your face and body out of the luggage net's recoil path. DO NOT use when the strap has visible signs of wear or damage.**

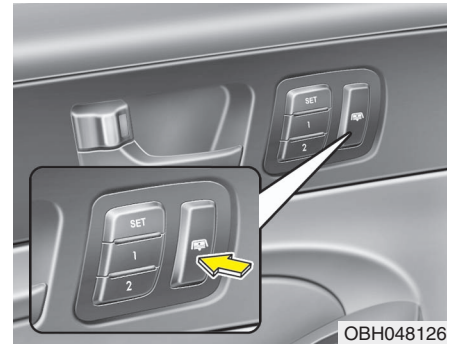


D281500ABH

## Rear curtain (if equipped)

To fold the rear curtain, depress the button. To unfold the rear curtain, depress the button again.

The rear curtain will be folded automatically when you shift the shift lever into R (Reverse) and unfolded automatically when you shift the shift lever from R (Reverse) into P (Park).

After the rear curtain is folded by shifting the shift lever into R (Reverse), if you drive more than 20km/h with the shift lever in D (Drive), the rear curtain will be unfolded automatically.

⚠ **CAUTION**

***Do not pull or fold the rear curtain by hand. It could cause motor failure.***

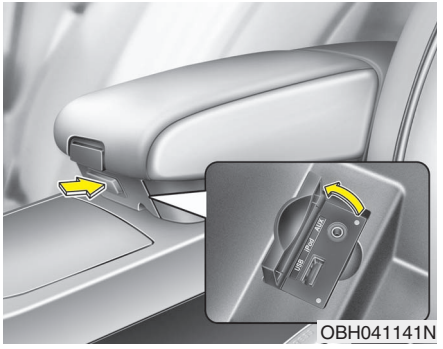

OBH041141N

D281400AFD

## Aux, USB and iPod® port

If your vehicle has an aux and/or USB(universal serial bus) port or iPod port, you can use an aux port to connect audio devices and a USB port to plug in a USB, and an iPod port to plug in an iPod.

### ✻ NOTICE

**When using a portable audio device connected to the power outlet, noise may occur during playback. If this happens, use the power source of the portable audio device.**

❊ iPod® is a trademark of Apple Inc.

Type A

OBH048139N

Type B

OBH049139N

D281800ABH

## Navigation system (if equipped)

The navigation system ascertains the present position of your vehicle by using information from satellites and guides you to the place you assign as the destination.

Detailed information for the navigation system is described in a separately supplied manual.

D282000ABH

## DIS (Driver Information System) (if equipped)

Information for DIS is provided in the DIS manual.

D281900ABH

## Bluetooth hands-free (if equipped)

You can use a wireless bluetooth phone.

Detailed information for the Bluetooth hands-free is described in a separate manual.

## AUDIO SYSTEM

### ✻ NOTICE

**If you install an aftermarket HID headlamp, your vehicle's audio and electronic device may malfunction.**

### Antenna

D300102ABH

***Glass antenna (if equipped)***

When the radio power switch is turned on while the ignition key is in either the “ON” or “ACC” position, your car will receive both AM and FM broadcast signals through the antenna in the rear window glass.

**⚠ CAUTION**

- ***Do not clean the inside of the rear window glass with a cleaner or scraper to remove foreign deposits as this may cause damage to the antenna elements.***
- ***Avoid adding metallic coatings such as Ni, Cd, and so on. These can disturb receiving AM and FM broadcast signals.***

D300200AEN

### Steering wheel audio control

The steering wheel may incorporate audio control buttons.

**⚠ CAUTION**

***Do not operate audio remote control buttons simultaneously.***

D300204ABH

***VOLUME (∧/∨) (1)***

- Press the up button (∧) to increase volume.
- Press the down button (∨) to decrease volume.

D300203AEN

***SEEK/PRESET (∧/∨) (2)***

If the SEEK/PRESET button is pressed for 0.8 second or more, it will work as follows in each mode.

**RADIO mode**

It will function as the AUTO SEEK select button. It will SEEK until you release the button.

**CD player mode**

It will function as the FF/REW button.

**CD changer mode**

It will function as the DISC UP/DOWN button.

If the SEEK/PRESET button is pressed for less than 0.8 second, it will work as follows in each mode.

**RADIO mode**

It will function as the PRESET STATION select buttons.

**CD player mode**

It will function as the TRACK UP/DOWN button.

**CD changer mode**

It will function as the TRACK UP/DOWN button.

Detailed information for audio control buttons is included in the following pages in this section.

D300205ABH

***MODE (3)***

Press the MODE button to select Radio, CD (Compact Disc) or CDC (Compact Disc Changer, if equipped).

D300205AEN

***MUTE (4) (if equipped)***

- Press the MUTE button to cancel the sound.
- Press the MUTE button again to activate the sound.

**FM radio reception**

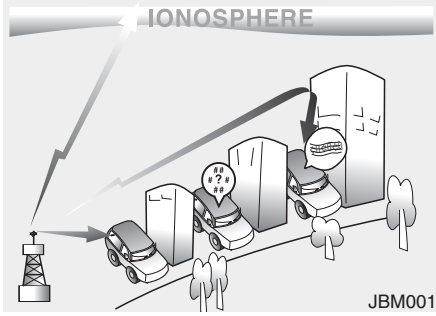


D300800AEN-EU

## How car audio works

AM and FM radio signals are broadcast from transmitter towers located around your city. They are intercepted by the radio antenna on your vehicle. This signal is then received by the radio and sent to your vehicle speakers.

When a strong radio signal has reached your vehicle, the precise engineering of your audio system ensures the best possible quality reproduction. However, in some cases the signal coming to your vehicle may not be strong and clear. This can be due to factors such as the distance from the radio station, closeness of other strong radio stations or the presence of buildings, bridges or other large obstructions in the area.

## AM radio receptionreception

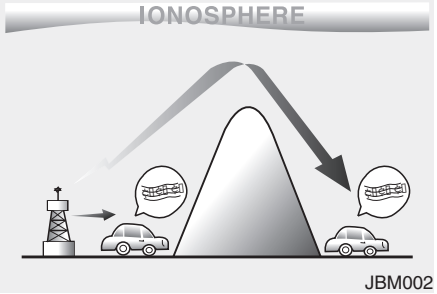


AM broadcasts can be received at greater distances than FM broadcasts. This is because AM radio waves are transmitted at low frequencies. These long, low frequency radio waves can follow the curvature of the earth rather than travelling straight out into the atmosphere. In addition, they curve around obstructions so that they can provide better signal coverage.

## FM radio station

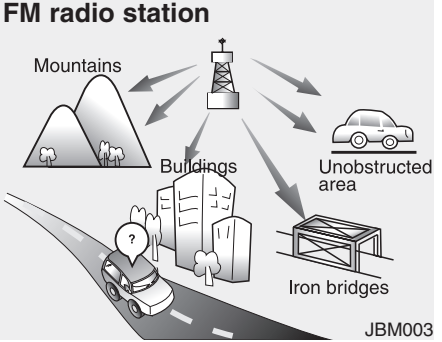


FM broadcasts are transmitted at high frequencies and do not bend to follow the earth's surface. Because of this, FM broadcasts generally begin to fade at short distances from the station. Also, FM signals are easily affected by buildings, mountains, or other obstructions. These can result in certain listening conditions which might lead you to believe a problem exists with your radio. The following conditions are normal and do not indicate radio trouble:

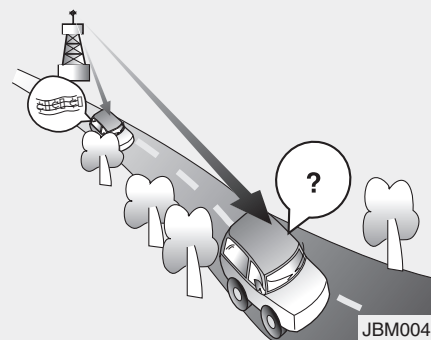


- Fading - As your car moves away from the radio station, the signal will weaken and sound will begin to fade. When this occurs, we suggest that you select another stronger station.
- Flutter/Static - Weak FM signals or large obstructions between the transmitter and your radio can disturb the signal causing static or fluttering noises to occur. Reducing the treble level may lessen this effect until the disturbance clears.

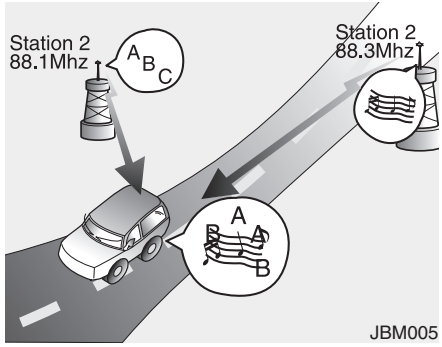


- Station Swapping - As a FM signal weakens, another more powerful signal near the same frequency may begin to play. This is because your radio is designed to lock onto the clearest signal. If this occurs, select another station with a stronger signal.
- Multi-Path Cancellation - Radio signals being received from several directions can cause distortion or fluttering. This can be caused by a direct and reflected signal from the same station, or by signals from two stations with close frequencies. If this occurs, select another station until the condition has passed.

## Satellite radio reception

You may experience problems in receiving XM™ satellite radio signals in the following situations.

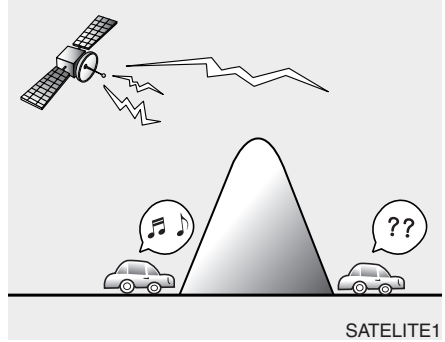


- If you are driving in a tunnel or a covered parking area.
- If you are driving beneath the top level of a multi-level freeway.
- If you drive under a bridge.
- If you are driving next to a tall vehicle (such as a truck or a bus) that block the signal.
- If you are driving in a valley where the surrounding hills or peaks block the signal from the satellite.
- If you are driving on a mountain road where the signal is blocked by mountains.

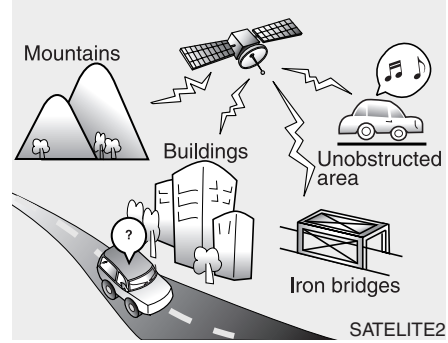


- If you are driving in an area with tall trees that block the signal (30ft./10m or more); for example, on a road through a dense forest.
- The signal can become weak in some areas that are not covered by the XM™ repeater network.

Please note that these may be other unforeseen circumstances when there are problems with the reception of XM™ satellite radio signal.

***Using a cellular phone or a two-way radio***

When a cellular phone is used inside the vehicle, noise may be produced from the audio equipment. This does not mean that something is wrong with the audio equipment. In such a case, use the cellular phone at a place as far as possible from the audio equipment.

**⚠ CAUTION**

***When using a communication system such a cellular phone or a radio set inside the vehicle, a separate external antenna must be fitted. When a cellular phone or a radio set is used with an internal antenna alone, it may interfere with the vehicle's electrical system and adversely affect safe operation of the vehicle.***

**⚠ WARNING**

**Don't use a cellular phone when you are driving. You should stop at a safe place to use a cellular phone.**

## Care of discs

- If the temperature inside the car is too high, open the car windows for ventilation before using your car audio.
- It is illegal to copy and use MP3/WMA files without permission. Use CDs that are created only by lawful means.
- Do not apply volatile agents such as benzene and thinner, normal cleaners and magnetic sprays made for analogue discs onto CDs.
- To prevent the disc surface from getting damaged, hold and carry CDs by the edges or the edges of the center hole only.
- Clean the disc surface with a piece of soft cloth before playback (wipe it from the center to the outside edge).
- Do not damage the disc surface or attach pieces of sticky tape or paper onto it.
- Make sure nothing other than CDs are inserted into the CD player (Do not insert more than one CD at a time).
- Keep CDs in their cases after use to protect them from scratches or dirt.
- Depending on the type of CD-R/CD-RW CDs, certain CDs may not operate normally depending upon manufacturing companies or processes and recording methods. In such circumstances, if you still continue to use those CDs, they may cause the malfunction of your car audio system.

**✻ NOTICE - Playing an Incompatible Copy Protected Audio CD**

**Some copy protected CDs, which do not comply with the international audio CD standards (Red Book), may not play on your car audio. Please note that if you try to play copy protected CDs and the CD player does not perform correctly, the CDs maybe defective, not the CD player.**

## RADIO, SET UP, VOLUME CONTROL (CD Player : PA710BH)

1. FM/AM Button
2. POWER Button & VOLUME Knob
3. SEEK Button
4. PRESET Buttons
5. DISPLAY (Screen ON/OFF) Button
6. TUNE Knob & SETUP Button
7. SCAN Button

BH_PA710BH_RADIO

## Using RADIO, SET UP, VOLUME Control

### 1. FM/AM Button

Turns to FM or AM mode, and toggles in the order of FM1➞FM2➞AM➞FM1... when the button is pressed each time.

### 2. POWER Button & VOLUME Knob

Turns the set on/off when the IGNITION SWITCH is on ACC or ON. If the button is turned to the right, it increases the volume and left, decreases the volume.

### 3. SEEK Button

- When the [SEEK ∨] button is pressed, it reduces the band frequency to automatically select a channel. Stops at the previous frequency if no channel is found.
- When the [SEEK ∧] button is pressed, it increases the band frequency to automatically select a channel. Stops at the previous frequency if no channel is found.

### 4. PRESET Buttons

Press [1]~[6] buttons less than 0.8 second to play the channel saved in each button. Press preset button for 0.8 second or longer to save current channel to the respective button with a beep.

### 5. DISPLAY (Screen ON/OFF) Button

Turns the displayed data and light on/off on the LCD.

### 6. TUNE Knob & SETUP Button

When you rotate to clockwise or counterclockwise, the frequency increases or decreases by each step.

General(AM 9kHz, FM 100kHz), USA (AM 10kHz, FM 200kHz)

When you press this button, enter the SETUP mode. If no action is taken for 5 seconds after pressing the button, it will return to the play mode. (After entering SETUP mode, move between items using the left, right and push functions of the TUNE/SETUP button.)

### 7. SCAN Button

Press to hear a brief sampling of all stations on the frequency band. When you press this button again at this moment, you can receive the broadcasting that you choose.

## CD (CD Player : PA710BH)

1. RANDOM Button
2. REPEAT Button
3. CD Button
4. TRACK Button
5. SCAN Button
6. CD Eject Button
7. TUNE Knob & SETUP Button
8. INFO Button
9. FOLDER Button
10. CD Indicator
11. CD Slot

BH_PA710BH_CD

## Using CD Player

### 1. RANDOM Button

Turns on/off the randomization of the play list of files in the currently played DISC. To cancel the mode, press the button once again.

### 2. REPEAT Button

Repeats current song when the button is pressed for less than 0.8 second.

Repeats the entire DISC when the button is pressed for 0.8 second or longer.

### 3. CD Button

Turns to CD mode.

### 4. TRACK Button

- Press [TRACK ∨] button for less than 0.8 second to play from the beginning of current song.
- Press [TRACK ∨] button for less than 0.8 second and press again within 1 second to play the previous song.
- Press [TRACK ∨] button for 0.8 second or longer to initiate reverse direction high speed sound search of current song.
- Press [TRACK ∧] button for less than 0.8 second to play the next song.
- Press [TRACK ∧] button for 0.8 second or longer to initiate high speed sound search of current song.

### 5. SCAN Button

Play first 10 seconds of each song in the DISC. To cancel the mode, press the button once again.

### 6. CD Eject Button

Press ⏏ button to eject the CD during CD playback. This button is enabled when ignition switch is off.

### 7. TUNE Knob & SETUP Button

Turn this button clockwise to display songs after current song.

Also, turn this button counterclockwise to display songs before current song.

To listen to the displayed song, press the button to skip to the song and play.

### 8. INFO Button

Displays the information of the current CD TRACK (or FILE) in the order of DISC TITLE➞DISC ARTIST➞TRACK TITLE➞TRACK ARTIST➞TOTAL➞Play Screen➞DISC TITLE... when the button is pressed each time.

### 9. FOLDER Button

- Press [FOLDER ∨] button child folder of the current folder and display the first song in the folder. Press TUNE/SETUP button to move to the folder displayed. It will play the first song in the folder.
- Press [FOLDER ∧] button parent folder and displays the first song in the folder. Press TUNE/SETUP button to move to the folder displayed. It will play the first song in the folder. (MP3 only)

### 10. CD Indicator

When the ignition switch is in ACC or ON and if the CD is loaded, this indicator icon is on. If the CD is ejected the icon is off.

### 11. CD Slot

Insert CD with printed side upward and gently push in. When the ignition switch is on ACC or ON and power is off, power is automatically turned on if the CD is loaded. This CDP supports 12 cm CDs. But if a VCD, Data CD, or DVD are loaded, "Media Error" message will appear.

### ⚠ CAUTION IN USING USB DEVICE

- *To use an external USB device, make sure the device is not connected when starting up the vehicle. Connect the device after starting up.*
- *If you start the engine when the USB device is connected, it may damage the USB device. (USB flashdrives are very sensitive to electric shock.)*
- *If the engine is started up or turned off while the external USB device is connected, the external USB device may not work.*
- *It may not play inauthentic MP3 or WMA files.*
  1) *It can only play MP3 files with the compression rate between 8Kbps~320Kbps.*
  2) *It can only play WMA music files with the compression rate between 8Kbps~320Kbps.*
- *Take precautions for static electricity when connecting or disconnecting the external USB device.*

*(Continued)*

*(Continued)*

- *An encrypted MP3 PLAYER is not recognizable.*
- *Depending on the condition of the external USB device, the connected external USB device can be unrecognizable.*
- *When the formatted byte/sector setting of External USB device is not either 512BYTE or 2048BYTE, then the device will not be recognized.*
- *Use only a USB device formatted to FAT 12/16/32.*
- *USB devices without USB I/F authentication may not be recognizable.*
- *Make sure the USB connection terminal does not come in contact with the human body or other objects.*
- *If you repeatedly connect or disconnect the USB device in a short period of time, it may break the device.*
- *You may hear a strange noise when connecting or disconnecting a USB device.*

*(Continued)*

*(Continued)*

- *If you disconnect the external USB device during playback in USB mode, the external USB device can be damaged or may malfunction. Therefore, disconnect the external USB device when the audio is turned off or in another mode. (e.g, Radio, XM or CD)*
- *Depending on the type and capacity of the external USB device or the type of the files stored in the device, there is a difference in the time taken for recognition of the device.*
- *Do not use the USB device for purposes other than playing music files.*
- *Playing videos through the USB is not supported.*
- *Use of USB accessories such as rechargers or heaters using USB I/F may lower performance or cause trouble.*
- *If you use devices such as a USB hub purchased separately, the vehicle's audio system may not recognize the USB device. In that case, connect the USB device directly to the multimedia terminal of the vehicle.*

*(Continued)*

*(Continued)*

- *If the USB device is divided by logical drives, only the music files on the highest-priority drive are recognized by car audio.*
- *Devices such as MP3 Player/ Cellular phone/Digital camera can be unrecognizable by standard USB I/F can be unrecognizable.*
- *Charging through the USB may not be supported in some mobile devices.*

  ✻ *A car exclusive cable (provided or sold separately) is required to use the iPod.*
- *Some non-standard USB devices (METAL COVER TYPE USB) can be unrecognizable.*
- *Some USB flash memory readers (such as CF, SD, microSD, etc.) or external-HDD type devices can be unrecognizable.*
- *Music files protected by DRM (DIGITAL RIGHTS MANAGEMENT) are not recognizable.*

*(Continued)*

*(Continued)*

- *The data in the USB memory may be lost while using this audio. Always back up important data on a personal storage device.*
- *Please avoid using USB memory products which can be used as key chains or cellular phone accessories as they could cause damage to the USB jack. Please make certain only to use plug type connector products as shown below.*

## USB (CD Player : PA710BH)

1. RANDOM Button
2. REPEAT Button
3. USB Button
4. TRACK Button
5. SCAN Button
6. TUNE Knob & SETUP Button
7. INFO Button
8. FOLDER Button

BH_PA710BH_USB

### Using USB device

Using a USB that is connected to the multiple terminal inside the console on the right hand side of the driver's seat.

### 1. RANDOM Button

Turns on/off the randomization of the play list of files in the currently played folder. Press the button for more than 0.8 second to randomly play the entire songs in the USB device. To cancel the mode, press the button once again.

### 2. REPEAT Button

Repeats current song when the button is pressed for less than 0.8 second.

Repeats the entire folder when the button is pressed for 0.8 second or longer.

### 3. USB Button

If USB device is connected, it switches to the USB mode from CD mode to play the song files stored in the USB.

If the auxiliary device is connected, it turns to AUX mode to play the sound from the auxiliary player.

### 4. TRACK Button

- Press [TRACK ∨] button for less than 0.8 second to play from the beginning of current song.
- Press [TRACK ∨] button for less than 0.8 second and press again within 1 seconds to play the previous song.
- Press [TRACK ∨] button for 0.8 second or longer to initiate reverse direction high speed sound search of current song.
- Press [TRACK ∧] button for less than 0.8 second to play the next song.
- Press [TRACK ∧] button for 0.8 second or longer to initiate high speed sound search of current song.

### 5. SCAN Button

Play first 10 seconds of each song in the folder. To cancel the mode, press the button once again.

### 6. TUNE Knob & SETUP Button

Turn this button clockwise to display songs after the current song.

Also, turn this button counterclockwise to display songs before the current song.

To listen to the displayed song, press the button to skip to the song and play.

### 7. INFO Button

Displays the information of the file currently played in order of FILE➞TITLE ➞ARTIST➞ALBUM➞FOLDER➞TOTAL➞ Play Screen➞FILE... when the button is pressed each time.

### 8. FOLDER Button

- Press [FOLDER ∨] button sub folder of the current folder and display the first song in the folder. Press TUNE/SETUP button to move to the folder displayed. It will play the first song in the folder.
- Press [FOLDER ∧] button main folder and displays the first song in the folder. Press TUNE/SETUP button to move to the folder displayed. It will play the first song in the folder. (MP3 only)

## iPod® (CD Player : PA710BH)

1. RANDOM Button
2. REPEAT Button
3. iPod Button
4. TRACK Button
5. CATEGORY Button
6. TUNE Knob & SETUP Button
7. INFO Button

❊ iPod® is a trademark of Apple Inc.

BH_PA710BH_iPod®

### Using iPod®

Using an iPod when the exclusive cable is connected to the multiple terminal inside the console on the right hand side of the driver's seat.

### 1. RANDOM Button

Press the button for less than 0.8 second to activate or deactivate the random playback of the songs within the current category. Press the button for longer than 0.8 second to randomly play all songs in the entire album of the iPod. Press the button once again to cancel the mode.

### 2. REPEAT Button

Repeats the song currently played.

### 3. iPod Button

If an iPod is connected, the system switches to the iPod mode to play the song files stored in the iPod.

### 4. TRACK Button

- Press the [TRACK ∨] button for less than 0.8 second to play from the beginning of the current song.
- Press the [TRACK ∨] button for less than 0.8 second and press again within 1 seconds to play the previous song.
- Press the [TRACK ∨] button for 0.8 second or longer to initiate reverse direction high speed sound search of current song.
- Press the [TRACK ∧] button for less than 0.8 second to play the next song.
- Press the [TRACK ∧] button for 0.8 second or longer to initiate high speed sound search of current song.

### 5. CATEGORY Button

Press [CAT FOLDER ∧/∨] button to move the category and display the first song in the category. Press [TUNE/SETUP] button to move to the category displayed. It will play the first song in the folder.

(PLAYLISTS ➞ ARTISTS ➞ ALBUMS ➞ GENRES ➞ SONGS ➞ COMPOSERS ➞ PLAYLISTS ➞...)

### 6. TUNE Knob & SETUP Button

Turn this button clockwise or counterclockwise, it will display the category menu. To select the displayed menu, press the button.

### 7. INFO Button

Displays the information of the file currently played in order of TITLE➞ARTIST ➞ALBUM➞Play Screen➞TITLE...

## ✻ NOTICE FOR USING THE iPod® DEVICE

- Some iPod models might not support the communication protocol and the files will not be played.
  Supported iPod models:
  - iPod Mini
  - iPod 4th(Photo) ~ 6th(Classic) generation
  - iPod Nano 1st~4th generation
  - iPod Touch 1st~2nd generation
- The order of search or playback of songs in the iPod can be different from the order searched in the audio system.
- If the iPod disabled due to its own malfunction, reset the iPod. (Reset: Refer to iPod manual)
- An iPod may not operate normally on low battery.
- Some iPod devices, such as the iPhone, can be connected through the Bluetooth® interface. The device must have audio Bluetooth® capability (such as for stereo headphone Bluetooth®). The device can play, but it will not be controlled by the audio system.

## ⚠ CAUTION IN USING THE iPod® DEVICE

- *The HYUNDAI iPod Power Cable is needed in order to operate iPod with the audio buttons on the audio system. The USB cable provided by Apple may cause malfunction and should not be used for HYUNDAI vehicles.*

  ✻ *The HYUNDAI iPod Power Cable may be purchased through your HYUNDAI Dealership.*
- *When connecting iPod with the iPod Power Cable, insert the connector to the multimedia socket completely. If not inserted completely, communications between iPod and audio may be interrupted.*
- *When adjusting the sound effects of the iPod and the audio system, the sound effects of both devices will overlap and might reduce or distort the quality of the sound.*
- *Deactivate (turn off) the equalizer function of an iPod when adjusting the audio system's volume, and turn off the equalizer of the audio system when using the equalizer of an iPod.*

*(Continued)*

*(Continued)*

- *When the iPod cable is connected, the system can be switched to AUX mode even without iPod device and may cause noise. Disconnect the iPod cable when you are not using the iPod device.*
- *When not using iPod with car audio, detach the iPod cable from iPod. Otherwise, iPod may remain in accessory mode, and may not work properly.*

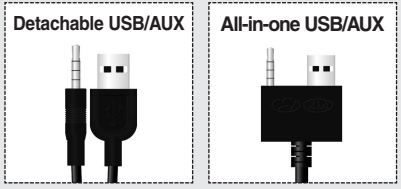


- *When connecting the iPod, use the USB/AUX terminals.*
- *When disconnecting the iPod, disconnect both the USB/AUX terminal.*
- *The iPod exclusive cable must be connected to both the USB/AUX terminals for iPod charging and operations to be supported.*

## XM Satellite Radio (CD Player : PA710BH)

1. XM Button
2. SEEK Button
3. SCAN Button
4. PRESET Buttons
5. TUNE Knob & SETUP Button
6. INFO Button
7. CAT/FOLDER Button

BH_PA710BH_XM RADIO

## Using XM Satellite Radio

### 1. XM Button

Turns to XM Satellite Radio Mode.

XM mode toggles in order to XM1➞XM2 ➞XM3➞XM1... when the button is pressed each time.

### 2. SEEK Button

- Press the [SEEK∨] button for less than 0.8 second to select previous channel.
- Press the [SEEK∨] button for 0.8 second or longer to continuously move to previous channel.
- Press the [SEEK∧] button for less than 0.8 second to select next channel.
- Press the [SEEK∧] button for 0.8 second or longer to continuously move to next channel.
- Radio ID : Seek or Tune to XM channel 0 to display the Radio ID.

### 3. SCAN Button

Press to hear a brief sampling of all channels. To cancel the scan mode, press the button once again.

### 4. PRESET Buttons

Push [1]~[6] buttons less than 0.8 second to play the channel saved in each button. Push pre-set button for 0.8 second or longer to save the current channel to the respective button with a beep.

### 5. TUNE Knob & SETUP Button

Turn this button clockwise to display channels after.

Also, turn this button counterclockwise to display channels before current channel.

XM setup mode : It will be able to change the XM display. (ex, Display by category/ channel or artist/song title.)

### 6. INFO Button

Displays the information of the current channel in the order of Artist/Song title➞ Category/Channel name➞Current Play Channel➞Artist/Song title➞Category/Channel name... when the button is pressed each time.

If the complete text information is not displayed, rotate the tune button to see the next page.

### 7. CAT/FOLDER Button

- Press [CAT∨] button to search previous category.
- Press [CAT∧] button to search next category.

To listen to the displayed category, press the TUNE/SETUP button.

To scan channel in displayed category, press the scan button.

To search channel in displayed category, press seek buttons or turn the tune button clockwise/counterclockwise.

(CATEGORY icon will be turned on in Category mode)

## RADIO, SET UP, VOLUME CONTROL (CD Changer : PA760BH)

1. FM/AM Button
2. POWER Button & VOLUME Knob
3. SEEK Button
4. PRESET Buttons
5. DISPLAY(Screen ON/OFF) Button
6. TUNE Knob & SETUP Button
7. SCAN Button

❊ Lexicon mark is optional

BH_PA760BH_RADIO

## Using RADIO, SET UP, VOLUME Control

### 1. FM/AM Button

Turns to FM or AM mode, and toggles in the order of FM1➞FM2➞AM➞FM1... when the button is pressed each time.

### 2. POWER Button & VOLUME Knob

Turns the set on/off when the IGNITION SWITCH is on ACC or ON. If the button is turned to the right, it increases the volume and left, decreases the volume.

### 3. SEEK Button

- When the [SEEK ∨] button is pressed, it reduces the band frequency to automatically select a channel. Stops at the previous frequency if no channel is found.
- When the [SEEK ∧] button is pressed, it increases the band frequency to automatically select a channel. Stops at the previous frequency if no channel is found.

### 4. PRESET Buttons

Push [1]~[6] buttons less than 0.8 second to play the channel saved in each button. Push pre-set button for 0.8 second or longer to save the current channel to the respective button with a beep.

### 5. DISPLAY(Screen ON/OFF) Button

Turns on/off the displayed data and light on the LCD.

### 6. TUNE Knob & SETUP Button

When you rotate to clockwise or counter-clockwise, the frequency increases or decreases by each step.

General(AM 9kHz, FM 100kHz), USA (AM 10kHz, FM 200kHz)

When you press this button, enter the SETUP mode. If no action is taken for 5 seconds after pressing the button, it will return to the play mode. (After entering SETUP mode, move between items using the left, right and push functions of the TUNE/SETUP button.)

❊ SURROUND is only Lexicon model.

### 7. SCAN Button

Press to hear a brief sampling of all stations on the frequency band. When you press this button again at this moment, you can receive the broadcasting that you choose.

## CD (CD Changer : PA760BH)

1. RANDOM Button
2. REPEAT Button
3. CD Button
4. TRACK Button
5. SCAN Button
6. CD Eject Button
7. TUNE Knob & SETUP Button
8. INFO Button
9. FOLDER Button
10. LOAD Button
11. CD Slot

BH_PA760BH_CDC

## Using CD Player

### 1. RANDOM Button

Turns on/off the randomization of the play list of files in the currently played DISC. To cancel the mode, press the button once again.

### 2. REPEAT Button

Repeats the current song when the button is pressed for less than 0.8 second.

Repeats the entire DISC when the button is pressed for 0.8 second or longer.

### 3. CD Button

Turns to CD mode.

### 4. TRACK Button

- Press [SEEK ∨] button for less than 0.8 second to play from the beginning of current song.
- Press [SEEK ∨] button for less than 0.8 second and press again within 1 seconds to play the previous song.
- Press [SEEK ∨] button for 0.8 second or longer to initiate reverse direction high speed sound search of current song.
- Press [SEEK ∧] button for less than 0.8 second to play the next song.
- Press [SEEK ∧] button for 0.8 second or longer to initiate high speed sound search of current song.

### 5. SCAN Button

Play first 10 seconds of each song in the DISC. To cancel the mode, press the button once again.

### 6. CD Eject Button

Press ⏏ button for less than 0.8 second to eject the CD during CD playback. All disc in the slot eject when the button is pressed for 0.8 second or longer. This button is enabled when the ignition switch is off.

### 7. TUNE Knob & SETUP Button

Turn this button clockwise to display songs after the current song.

Also, turn this button counterclockwise to display songs before the current song.

To listen to the displayed song, press the button to skip to the song and play.

### 8. INFO Button

Displays the information of the current CD TRACK (or FILE) in the order of DISC TITLE➡DISC ARTIST➡TRACK TITLE➡ TRACK ARTIST➡TOTAL➡Play Screen➡ DISC TITLE... when the button is pressed each time.

### 9. FOLDER Button

- Press the [FOLDER ∨] button child folder of the current folder and display the first song in the folder. Press TUNE/SETUP button to move to the folder displayed. It will play the first song in the folder.
- Press the [FOLDER ∧] button parent folder and displays the first song in the folder. Press TUNE/SETUP button to move to the folder displayed. It will play the first song in the folder. (MP3 only)

### 10. LOAD Button

Press the [LOAD] button to load CDs to available 6-Disc deck (from 1~6). Push [LOAD] button for more than 0.8 second to load into all available decks.

The last CD will play.

### 11. CD Slot

Insert CD with printed side upward and gently push in. When the ignition switch is on ACC or ON and power is off, power is automatically turned on if the CD is loaded. This CDP supports 12 cm CDs. But if VCD, Data CD, or DVD discs are loaded, "Media Error" message will appear.

### ⚠ CAUTION IN USING USB DEVICE

- *To use an external USB device, make sure the device is not connected when starting up the vehicle. Connect the device after starting up.*
- *If you start the engine when the USB device is connected, it may damage the USB device. (USB flashdrives are very sensitive to electric shock.)*
- *If the engine is started up or turned off while the external USB device is connected, the external USB device may not work.*
- *It may not play inauthentic MP3 or WMA files.*
  1) *It can only play MP3 files with the compression rate between 8Kbps~320Kbps.*
  2) *It can only play WMA music files with the compression rate between 8Kbps~320Kbps.*
- *Take precautions for static electricity when connecting or disconnecting the external USB device.*

*(Continued)*

*(Continued)*

- *An encrypted MP3 PLAYER is not recognizable.*
- *Depending on the condition of the external USB device, the connected external USB device can be unrecognizable.*
- *When the formatted byte/sector setting of External USB device is not either 512BYTE or 2048BYTE, then the device will not be recognized.*
- *Use only a USB device formatted to FAT 12/16/32.*
- *USB devices without USB I/F authentication may not be recognizable.*
- *Make sure the USB connection terminal does not come in contact with the human body or other objects.*
- *If you repeatedly connect or disconnect the USB device in a short period of time, it may break the device.*
- *You may hear a strange noise when connecting or disconnecting a USB device.*

*(Continued)*

*(Continued)*

- *If you disconnect the external USB device during playback in USB mode, the external USB device can be damaged or may malfunction. Therefore, disconnect the external USB device when the audio is turned off or in another mode. (e.g, Radio, XM or CD)*
- *Depending on the type and capacity of the external USB device or the type of the files stored in the device, there is a difference in the time taken for recognition of the device.*
- *Do not use the USB device for purposes other than playing music files.*
- *Playing videos through the USB is not supported.*
- *Use of USB accessories such as rechargers or heaters using USB I/F may lower performance or cause trouble.*
- *If you use devices such as a USB hub purchased separately, the vehicle's audio system may not recognize the USB device. In that case, connect the USB device directly to the multimedia terminal of the vehicle.*

*(Continued)*

*(Continued)*

- *If the USB device is divided by logical drives, only the music files on the highest-priority drive are recognized by car audio.*
- *Devices such as MP3 Player/ Cellular phone/Digital camera can be unrecognizable by standard USB I/F can be unrecognizable.*
- *Charging through the USB may not be supported in some mobile devices.*

  ✳ *A car exclusive cable (provided or sold separately) is required to use the iPod.*
- *Some non-standard USB devices (METAL COVER TYPE USB) can be unrecognizable.*
- *Some USB flash memory readers (such as CF, SD, microSD, etc.) or external-HDD type devices can be unrecognizable.*
- *Music files protected by DRM (DIGITAL RIGHTS MANAGEMENT) are not recognizable.*
- *The data in the USB memory may be lost while using this audio. Always back up important data on a personal storage device.*

*(Continued)*

*(Continued)*

- *Please avoid using USB memory products which can be used as key chains or cellular phone accessories as they could cause damage to the USB jack. Please make certain only to use plug type connector products as shown below.*

## USB (CD Changer : PA760BH)

1. RANDOM Button
2. REPEAT Button
3. USB Button
4. TRACK Button
5. SCAN Button
6. TUNE Knob & SETUP Button
7. INFO Button
8. FOLDER Button

BH_PA760BH_USB

### Using USB device

Using a USB that is connected to the multiple terminal inside the console on the right hand side of the driver's seat.

### 1. RANDOM Button

Turns on/off the randomization of the play list of files in the currently played folder. Press the button for more than 0.8 second to randomly play the entire songs in the USB device. To cancel the mode, press the button once again.

### 2. REPEAT Button

Repeats current song when the button is pressed for less than 0.8 second.

Repeats the entire folder when the button is pressed for 0.8 second or longer.

### 3. USB Button

If USB device is connected, it switches to the USB mode from CD mode to play the song files stored in the USB.

If the auxiliary device is connected, it turns to AUX mode to play the sound from the auxiliary player.

### 4. TRACK Button

- Press the [TRACK ∨] button for less than 0.8 second to play from the beginning of current song.
- Press the [TRACK ∨] button for less than 0.8 second and press again within 1 seconds to play the previous song.
- Press the [TRACK ∨] button for 0.8 second or longer to initiate reverse direction high speed sound search of current song.
- Press the [TRACK ∧] button for less than 0.8 second to play the next song.
- Press the [TRACK ∧] button for 0.8 second or longer to initiate high speed sound search of current song.

### 5. SCAN Button

Play first 10 seconds of each song in the folder. To cancel the mode, press the button once again.

### 6. TUNE Knob & SETUP Button

Turn this button clockwise to display songs after the current song.

Also, turn this button counterclockwise to display songs before the current song.

To listen to the displayed song, press the button to skip to the song and play.

### 7. INFO Button

Displays the information of the file currently played in order of FILE➞TITLE ➞ARTIST➞ALBUM➞FOLDER➞TOTAL➞ Play Screen➞FILE... when the button is pressed each time.

### 8. FOLDER Button

- Press the [FOLDER ∨] button sub folder of the current folder and display the first song in the folder. Press TUNE/SETUP button to move to the folder displayed. It will play the first song in the folder.
- Press the [FOLDER ∧] button main folder and displays the first song in the folder. Press TUNE/SETUP button to move to the folder displayed. It will play the first song in the folder. (MP3 only)

## iPod® (CD Changer : PA760BH)

1. RANDOM Button
2. REPEAT Button
3. iPod Button
4. TRACK Button
5. Category Button
6. TUNE Knob & SETUP Button
7. INFO Button

❊ iPod® is a trademark of Apple Inc.

BH_PA760BH_iPod®

### Using iPod®

Using an iPod when the exclusive cable is connected to the multiple terminal inside the console on the right hand side of the driver's seat.

### 1. RANDOM Button

Press the button for less than 0.8 second to activate or deactivate the random playback of the songs within the current category. Press the button for longer than 0.8 second to randomly play all songs in the entire album of the iPod. Press the button once again to cancel the mode.

### 2. REPEAT Button

Repeats the song currently played.

### 3. iPod Button

If an iPod is connected, the system switches to the iPod mode to play the song files stored in the iPod.

### 4. TRACK Button

- Press the [TRACK ∨] button for less than 0.8 second to play from the beginning of the current song.
- Press the [TRACK ∨] button for less than 0.8 second and press again within 1 seconds to play the previous song.
- Press the [TRACK ∨] button for 0.8 second or longer to initiate reverse direction high speed sound search of current song.
- Press the [TRACK ∧] button for less than 0.8 second to play the next song.
- Press the [TRACK ∧] button for 0.8 second or longer to initiate high speed sound search of current song.

### 5. Category Button

Press [CAT FOLDER ∧/∨] button to move the category and display the first song in the category. Press [TUNE/SETUP] button to move to the category displayed. It will play the first song in the folder.

(PLAYLISTS ➞ ARTISTS ➞ ALBUMS ➞ GENRES ➞ SONGS ➞ COMPOSERS ➞ PLAYLISTS ➞...)

### 6. TUNE Knob & SETUP Button

Turn this button clockwise or counterclockwise, it will display the category menu. To select the displayed menu, press the button.

### 7. INFO Button

Displays the information of the file currently played in order of TITLE➞ARTIST ➞ALBUM➞Play Screen➞TITLE...

## ✻ NOTICE FOR USING THE iPod® DEVICE

- Some iPod models might not support the communication protocol and the files will not be played.
  Supported iPod models:
  - iPod Mini
  - iPod 4th(Photo) ~ 6th(Classic) generation
  - iPod Nano 1st~4th generation
  - iPod Touch 1st~2nd generation
- The order of search or playback of songs in the iPod can be different from the order searched in the audio system.
- If the iPod disabled due to its own malfunction, reset the iPod. (Reset: Refer to iPod manual)
- An iPod may not operate normally on low battery.
- Some iPod devices, such as the iPhone, can be connected through the Bluetooth® interface. The device must have audio Bluetooth® capability (such as for stereo headphone Bluetooth®). The device can play, but it will not be controlled by the audio system.

## ⚠ CAUTION IN USING THE iPod® DEVICE

- *The HYUNDAI iPod Power Cable is needed in order to operate iPod with the audio buttons on the audio system. The USB cable provided by Apple may cause malfunction and should not be used for HYUNDAI vehicles.*
  - ✻ *The HYUNDAI iPod Power Cable may be purchased through your HYUNDAI Dealership.*
- *When connecting iPod with the iPod Power Cable, insert the connector to the multimedia socket completely. If not inserted completely, communications between iPod and audio may be interrupted.*
- *When adjusting the sound effects of the iPod and the audio system, the sound effects of both devices will overlap and might reduce or distort the quality of the sound.*
- *Deactivate (turn off) the equalizer function of an iPod when adjusting the audio system's volume, and turn off the equalizer of the audio system when using the equalizer of an iPod.*

*(Continued)*

*(Continued)*

- *When the iPod cable is connected, the system can be switched to AUX mode even without iPod device and may cause noise. Disconnect the iPod cable when you are not using the iPod device.*
- *When not using iPod with car audio, detach the iPod cable from iPod. Otherwise, iPod may remain in accessory mode, and may not work properly.*

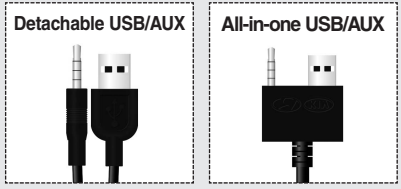


- *When connecting the iPod, use the USB/AUX terminals.*
- *When disconnecting the iPod, disconnect both the USB/AUX terminal.*
- *The iPod exclusive cable must be connected to both the USB/AUX terminals for iPod charging and operations to be supported.*

## XM Satellite Radio (CD Changer : PA760BH)

1. XM Button
2. SEEK Button
3. SCAN Button
4. PRESET Buttons
5. TUNE Knob & SETUP Button
6. INFO Button
7. CAT/FOLDER Button

BH_PA760BH_XM RADIO

## Using XM Satellite Radio

### 1. XM Button

Turns to XM Satellite Radio Mode.

XM mode toggles in order to XM1➞XM2 ➞XM3➞XM1... when the button is pressed each time.

### 2. SEEK Button

- Press the [SEEK∨] button for less than 0.8 second to select previous channel.
- Press the [SEEK∨] button for 0.8 second or longer to continuously move to previous channel.
- Press the [SEEK∧] button for less than 0.8 second to select next channel.
- Press the [SEEK∧] button for 0.8 second or longer to continuously move to next channel.
- Radio ID : Seek or Tune to XM channel 0 to display the Radio ID.

### 3. SCAN Button

Press to hear a brief sampling of all channels. To cancel the scan mode, press the button once again.

### 4. PRESET Buttons

Push [1]~[6] buttons less than 0.8 second to play the channel saved in each button. Push pre-set button for 0.8 second or longer to save the current channel to the respective button with a beep.

### 5. TUNE Knob & SETUP Button

Turn this button clockwise to display channels after.

Also, turn this button counterclockwise to display channels before current channel.

XM setup mode : It will be able to change the XM display. (ex, Display by category/ channel or artist/song title.)

### 6. INFO Button

Displays the information of the current channel in the order of Artist/Song title➞ Category/Channel name➞Current Play Channel➞Artist/Song title➞Category/Channel name... when the button is pressed each time.

If the complete text information is not displayed, rotate the tune button to see the next page.

### 7. CAT/FOLDER Button

- Press [CAT∨] button to search previous category.
- Press [CAT∧] button to search next category.

To listen to the displayed category, press the TUNE/SETUP button.

To scan channel in displayed category, press the scan button.

To search channel in displayed category, press seek buttons or turn the tune button clockwise/counterclockwise.

(CATEGORY icon will be turned on in Category mode)

## HD RADIO™ RECEPTION (CD Changer : PA760BH)

1. SEEK UP/DOWN Button
2. SCAN Button
3. INFO Button
4. PRESET Buttons
5. TUNE Knob & SETUP Button

BH_PA760BH_HD_RADIO

## HD RADIO™ INFORMATION

### Licensing information

HD Radio™ Technology is Manufactured Under License From iBiquity Digital Corporation. U.S. and Foreign Patents. HD Radio™ and the HD and HD Radio logos are proprietary trademarks of iBiquity Digital Corporation.

### Availability information

HD Radio™ reception is available in the United States, including Alaska and Hawaii.

### What is HD Radio™ technology?

The vehicle audio system (if equipped) is able to receive standard analog FM/AM radio broadcasting as well as digital HD Radio™ FM/AM broadcasting.

HD Radio™ technology provides digital and analog reception using existing FM and AM broadcasting frequencies.

Currently, radio stations broadcasting an HD Radio™ signal are operating in a hybrid mode of both, analog and digital, in order to reach both receivers. In both modes, analog and digital, the broadcasted program contents are the same(except during multicasting, see below).

Eventually, as analog receivers are replaced by digital ones, radio stations may be able to turn off their analog broadcasting and use only the digital broadcasting.

### Multicasting

HD Radio™ FM stations are able to broadcast multiple digital program streams(channels) over a single FM frequency. For example, a HD Radio™ FM station can run a main channel of music and a sub channel of news(or even two different music channels) at one frequency.

Only the program content of the main channel is in broadcasted analog.

### HD Radio™ signal delay

To overcome the delay that digital systems inherently produce, HD Radio™ technology first uses the audio signal of the analog broadcasting when you tune to an AM station or to the main channel of a FM station. After that, the system will blend from analog to digital signal.

Normally, this blending is very smooth. If you experience a skip in program content of several seconds, the radio station has not implemented HD Radio™ broadcasting correctly. This is not a problem with your audio system.

Due to the fact that sub channels are only broadcasting digital, blending from analog to digital signal is not possible if you tune to a sub channel. In this case playback of the sub channel starts after several seconds. This is a normal function.

### Automatic switching between digital and analog broadcasting

If the digital signal reception is lost, the system switches automatically to the analog signal. As soon as the digital signal is available again it will switch back.

Due to the fact that sub channels are only broadcasted digital, the system mutes playback if you have tuned to a sub channel and the digital signal is lost. The main line will show the message No HD signal in place of station name.

After approximately one minute with the digital signal lost, the system will automatically tune to the analog signal of the corresponding frequency.

### Text based information

HD Radio™ stations are able to broadcast text based information, e.g. station name, song title and artist name. The Driver Information System is able to display this information.

### Radio display while receiving a digital HD Radio™

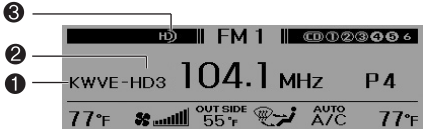


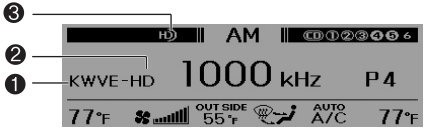


1. Call Sign(Station Name)
2. Channel Name(HD1=main channel, HD2~8=sub channel)
3. Indicator for HD Radio™

**1. SEEK UP/DOWN Button**

Press this button to automatically select previous or next station.

(HD➡HD2➡ ... HD8➡107.8MHz➡...)

**2. SCAN Button**

Press to hear a brief sampling of all stations on the frequency band, but not scanned HD Radio™ signals. When you press this button again, you can receive the broadcasting that you choose.

**3. INFO Button**

Shows details of the currently tuned HD Radio™ station.(Showing the artist name, song title)

## ✻ NOTICE

**The information displaying time may vary depending on radio environment and broadcast program content length (approximately10 seconds).**

**4. PRESET Buttons**

- Push [1] ~[6] buttons less than 0.8 second to play the channel saved in each button.
- Push preset button for 0.8 second or longer to save current channel to the respective button with a beep.

**5. TUNE Knob & SETUP Button**

When you rotate clockwise or counterclockwise, the frequency increases or decrease but skips HD Radio™ signals.

ex) HD1(107.7MHz) ➡107.8MHz ➡...

When you press this button, enter the SETUP mode. If you select the “HD” menu, you can control the HD setup menu.

1. You can off/on FM HD Radio™ reception.
2. You can off/on AM HD Radio™ reception.
3. Details on/off

- Details on display

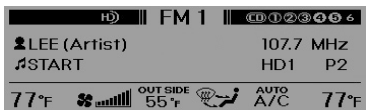


- Details off display

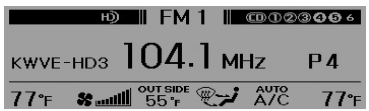

## BLUETOOTH® PHONE OPERATION (IF EQUIPPED)

### ■ What is Bluetooth®?

Bluetooth® is a wireless technology that allows multiple short range, low-powered devices like hands-free, stereo headset, wireless remote control, etc. to be connected. For more information, visit the Bluetooth® website at *www.Bluetooth.com*

### ■ General Feature

- This audio system supports Bluetooth® hands-free and stereo-headset features.
  - HANDS-FREE feature: Making or receiving calls wirelessly through voice recognition.
  - STEREO-HEADSET feature: Playing music from cellular phones (that supports A2DP feature) wirelessly.
- Voice recognition engine of the Bluetooth® system supports 3 types of languages:
  - English
  - Canadian French
  - US Spanish

### ✻ NOTICE

- **The phone must be paired to the system before using Bluetooth® features.**
- **Only one selected(linked) cellular phone can be used with the system at a time.**
- **Some phones are not fully compatible with this system.**

### ■ Bluetooth® Language Setting

The system language can be changed by the following steps:

1. Power on the audio system with the volume set to an audible level.
2. Press and hold button on the steering wheel until the audio displays “Please Wait”.
   - The Bluetooth® system will reply in currently selected language that it is changing to the next language.
   - System language cycles between English, Canadian French and US Spanish.
3. When completed, the audio display returns to normal.
4. Repeat steps 2 and 3 for the next language selection.

### ✻ NOTICE

**The phone needs to be paired again after changing system language.**

- **Avoid resting your thumb or finger on the as the language could unintentionally change.**

## ■ Voice Recognition Activation

- The voice recognition engine contained in the Bluetooth System can be activated in the following conditions:
  - Button Activation
    The voice recognition system will be active when the button is pressed and after the sound of a Beep.
  - Active Listening
    The voice recognition system will be active for a period of time when the Voice Recognition system has asked for a customer response.
- The system can recognize single digits from zero to nine while numbers greater than ten will not be recognized.
- If the command is not recognized, the system will announce "PARDON" or No input voice signal from microphone. (No response)
- The system shall cancel voice recognition mode in following cases : When pressing the button and saying "CANCEL" following the beep. When not making a call and pressing the button 0.8 second or longer. When voice recognition has failed 3 consecutive times.
- At any time if you say "help", the system will announce what commands are available.

## ■ Menu tree

The menu tree identifies available voice recognition Bluetooth® functions.

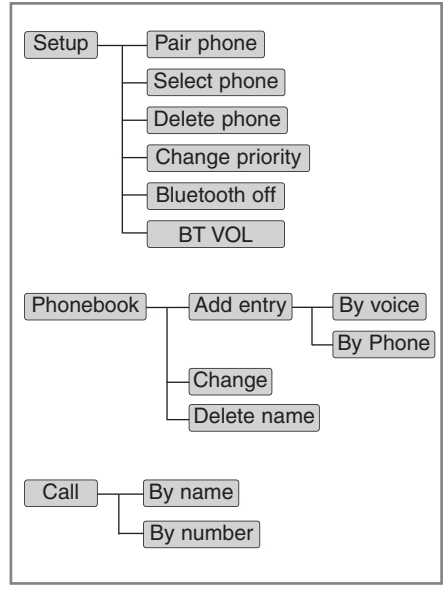


## ■ Voice Operation Tip

To get the best performance out of the Voice Recognition System, observe the following:

- Keep the interior of the vehicle as quiet as possible. Close the window to eliminate surrounding noise (traffic noise, vibration sounds, etc), which may disturb recognizing the voice command correctly.
- Speak a command after a beep sound within 5 seconds. Otherwise the command will not be received properly.
- Speak in a natural voice without pausing between words.

The Bluetooth® icon appears on the upper side of audio display when a phone is connected.

## ■ Phone Setup

All Bluetooth® related operations can be performed by voice command or by manual operation.

• By Voice Command:
Press button on the steering wheel to activate voice recognition.

• By manual operation
Push the TUNE/SETUP knob to enter SETUP mode. Select “BLUETOOTH” item by rotating the TUNE/SETUP knob, then push the knob.

**• Pairing phone**
Before using Bluetooth® features, the phone must be paired (registered) to the audio system. Up to 5 phones can be paired in the system.

### ✻ NOTICE

- **The pairing procedure of the phone varies according to each phone model. Before attempting to pair phone, please see your phone’s User’s Guide for instructions.**
- **Once pairing with the phone is completed, there is no need to pair with that phone again unless the phone is deleted manually from the audio system (refer “Deleting Phone” section) or the vehicle’s information is removed from the phone.**
- **Need to confirm if pairing can be done by voice. Need to confirm which system can paired by voice, CDC, CDP.**

1. Press button.
2. Say “Set Up”.
   - The system replies with available commands.
   - To skip the information message, press again and then a beep is heard.
3. Say “Pair Phone”
4. Say “Yes” to proceed.
5. Say the name of your phone when prompted.
   - Use any name to uniquely describe your phone.
   - Use Full name to voice tag.
   - Do not use a short name or similar name to voice command.
6. Bluetooth® system will repeat the name you stated.
7. Say "Yes" to confirm.
8. The audio displays “searching ---- passkey: 0000” and asks you to initiate pairing procedure from the phone.
9. Search the Bluetooth® system on your phone. Your phone should display your [vehicle model name] on the Bluetooth® device list. Then attempt pairing on your phone.
10. After Pairing is completed, your phone will start to transfer phone/contact list to the audio system.

- This process may take from a few minutes to over 10 minutes depending on the phone model and number of entries in the phone/contact list.

11. By manual operation:
    - Select “PAIR” in PHONE menu, then proceed from step 5.

## ✻ NOTICE

**Depending on the phone make and model, the phone book contact list may not transfer to the audio system.**

## ✻ NOTICE

- **Until the audio displays “Transfer Complete”, Bluetooth® hands-free feature may not be fully operational.**
- **If the phone is paired to two or more vehicles of the same model, i.e. both vehicles are HYUNDAI GENESIS, some phones may not handle Bluetooth® devices of that name correctly. In this case, you may need to change the name displayed on your phone from GENESIS.**
- **Refer to your phone’s User’s Guide, or contact your cellular carrier or phone manufacturer for instructions.**

**• Connecting phone**

When the Bluetooth® system is enabled, the phone previously used is automatically selected and re-connected. If you want to select a different phone previously paired, the phone can be selected through “Select Phone” menu.

Only a selected phone can be used with the hands-free system.

1. Press button.
2. Say "Set Up".
3. Say "Select Phone" after prompt
   - The system lists all the registered phone names.
4. Say the name or number of desired phone from the list.
5. Say "Yes" to confirm.
6. By manual operation:
   - Select “SELECT” in PHONE menu, then select desired phone from the list.

**• Deleting Phone**

The paired phone can be deleted.

- When the phone is deleted, all the information associated with that phone is also be deleted (including phonebook).
- If you want to use the deleted phone with the audio system again, pairing procedure must be completed once more.

1. Press button.
2. Say “Set Up”.
3. Say “Delete Phone” after prompt.
   - The system lists all the registered phone names.
4. Say the name or number of desired phone from the list.
5. Say “Yes” to confirm.
6. By manual operation:
   - Select “DELETE” in PHONE menu, then select desired phone from the list.

**• Changing Priority**

When several phones are paired to the audio system, the system attempts to connect following order when the Bluetooth® is enabled:

1) “Priority” checked phone.
2) Previously connected phone
3) Gives up auto connection.

1. Press button.
2. Say “Set Up”.
3. Say “Change Priority” after prompt.
   - The system lists all the registered phone names.
4. Say the name or number of desired phone from the list.
5. Say “Yes” to confirm.
6. By manual operation:
   - Select “PRIORITY” in PHONE menu, then select desired phone from the list.

**• Adjusting Bluetooth® Volume**

Bluetooth® system volume can be adjusted separately from main volume of the audio system. Volume control is available by manual operation only.

Select “BT Volume” in BLUETOOTH menu, adjust volume to desired level by rotating the TUNE/SETUP knob, then press the knob to confirm.

**• Turning Bluetooth® ON/OFF**

Bluetooth® system can be enabled (ON) or disabled (OFF) by this menu.

- If Bluetooth® is disabled, all the commands related to Bluetooth® system prompts whether you wish to turn Bluetooth® ON or not.

1. Press button.
2. Say “Set Up”
3. Say “Bluetooth Off” after prompt.
4. Say “Yes” to confirm.
5. By manual operation:
   - Select “BT Off” in PHONE menu, then after announcement, say “YES” to confirm.

## ■ Phone Book (In-Vehicle)

**• Adding Entry**

Phone numbers and voice tags can be registered. Entries registered in the phone can also be transferred.

**• Adding Entry by Voice**

1. Press button.
2. Say "Phonebook".
   - The system replies with all available commands.
   - To skip the information message, press again and then a beep is heard.
3. Say "Add Entry".
4. Say "By Voice" to proceed.
5. Say the name of the entry when prompted.
6. Say “Yes”to confirm.
7. Say the phone number of that entry when prompted.
8. Say “Store” if phone number input is finished.
9. Say a phone number type. “Home”, “Work”, “Mobile”, “Other” or “Default” is available.
10. Say “Yes” to complete adding entry.
11. Say “Yes” to store additional location for this contact, or say “Cancel” to finish the process.

## ✻ NOTICE

- **The system can recognize single digits from zero to nine. Numbers that are ten or greater cannot be recognized.**
- **You can enter each digit individually or group digits together in preferred string lengths.**
- **To speed up input, it is a good idea to group all digits into a continuous string.**
- **Recommend to enter the numbers constituted an grouping within all digit numbers to dial 995 / 734 / 0000**
- **The display corresponding to each operation appears on the screen as follows:**
- **Input operation example:**
  **1. Say: "Nine, nine, five"**
  **➟ Display: "995"**
  **2. And say: "Seven, three, four"**
  **➟ Display: "995734"**

**• Adding Entry by Phone**

1. Press button.
2. Say "Phonebook".
3. Say "Add Entry" after prompt.
4. Say "By Phone" to proceed.
5. Say "Yes" to confirm.
6. Your phone will start to transfer phone/contact list to the audio system. This process may take over 10 minutes depending on the phone model and number of entries
7. Wait till the audio displays "Transfer Complete" message.

**• Changing Name**

The registered names can be modified.

1. Press button.
2. Say "Phonebook"
3. Say "Change Name" after prompt.
4. Say the name of the entry (voice tag).
5. Say "Yes" to confirm.
6. Say new desired name.

**• Deleting Name**

The registered names can be deleted.

1. Press button.
2. Say "Phonebook"
3. Say "Delete Name" after prompt.
4. Say the name of the entry (voice tag)
5. Say "Yes" to confirm.

## ■ Making a Phone Call

**• Calling by Name**

A phone call can be made by speaking names registered in the audio system.

1. Press button.
2. Say "Call".
3. Say “Name” when prompted.
4. Say desired name (voice tag).
5. Say desired location (phone number type). Only stored locations can be selected.
6. Say “Yes” to confirm and make a call.

**✱ Tip**

**A shortcut to each of the following functions is available:**
**1. Say “Call Name”**
**2. Say “Call <john>”**
**3. Say “Call <john> at <home>”**

**• Dialing by Number**

A phone call can be made by dialing the spoken numbers. The system can recognize single digits from zero to nine.

1. Press button.
2. Say “Call”.
3. Say “Number” when prompted.
4. Say desired phone numbers.
5. Say “Dial” to complete the number and make a call.

**✱ Tip**

**A shortcut to each of the following functions is available:**
**1. Say “Dial Number”**
**2. Say “Dial <digit>”**

## ■ Receiving a Phone Call

When receiving a phone call, a ringtone is audible from speakers and the audio system changes into telephone mode.

When receiving a phone call, “Incoming” message and incoming phone number (if available) are displayed on the audio.

- To Answer a Call:
  - Press button on the steering wheel.
- To Reject a Call:
  - Press button for 0.8 second or longer on the steering wheel.
- To Adjust Ring Volume:
  - Use VOLUME buttons on the steering wheel.
- To Transfer a Call to the Phone (Secret Call):
  - Press button on the steering wheel.

## ■ Talking on the Phone

When talking on the phone, “Active Calls” message and the other party’s phone number (if available) are displayed on the audio.

• To Finish a Call

- Press button for 0.8 second or longer on the steering wheel.

### ✻ NOTICE

**In the following situations, you or the other party may have difficulty hearing each other:**

1. **Speaking at the same time, your voice may not reach the other parties. (This is not a malfunction.) Speak alternately with the other party on the phone.**
2. **Keep the Bluetooth® volume to a low level. High-level volume may result in distortion and echo.**
3. **When driving on a rough road.**
4. **When driving at high speeds.**
5. **When the window is open.**
6. **When the air conditioning vents are facing the microphone.**
7. **When the sound of the air conditioning fan is loud.**

## ■ Using the head unit as Bluetooth music

The head unit supports A2DP (Audio Advanced Distribution Profile) and AVRCP(Audio Video Remote Control Profile).

Both profiles are available for listening to MP3 music via Bluetooth cellular phone supporting above Bluetooth profiles.

To play MP3 music from the Bluetooth cellular phone, press the [CD/AUX] button until “MP3 Play” is displayed on the LCD.

Then try playing music by phone.

When playing music from the Bluetooth cellular phone, the head unit displays MP3 MODE.

### ✻ NOTICE

- **Not only MP3 files, but all the sounds that the phone supports can be heard by the audio system.**
- **Bluetooth cellular phones must feature A2DP and AVRCP functions.**
- **Some A2DP and AVRCP Bluetooth cellular phones may not play music through the head unit on the first try. Please try the below;**
  **i.e : Menu➡Filemanager➡Music➡Option➡Play via Bluetooth**
- **Please refer to User's Guide of your phone for more detailed information.**
- **To stop music, try stop music by the phone or change audio mode to AM/FM/XM, CD, iPod, etc.**

## ■ Key matrix

| No. | KEY | | Disconnected(BT Icon off) | | Connected (BT Icon On) | | | | | |
|---|---|---|---|---|---|---|---|---|---|---|
| | | | Paired H/P Empty | Paired H/P Exist | Connected | | Incoming Call | Outgoing Call | Active Call | TRANSFER CALL |
| | | | | | Normal mode | BT SETUP menu | | | | |
| 1 | | SHORT | Not Connect | - | - | - | Accept Call | - | Transfer Call (Handsfree <->Phone) | |
| | | LONG | - | - | VR MODE Cancel | - | Reject Call | End Call | End Call | End Call |
| 2 | | SHORT | Active | Active | Active | Active | - | - | - | - |
| | | LONG [10sec] | Change language | Change language | Change language | Change language | - | - | - | - |
| 3 | STEERING MODE KEY | | - | - | - | - | - | - | 2nd call<br>1st Call:waiting<br>2nd Call:active | - |
| 4 | AUDIO POWER KEY | | - | - | - | - | Reject Call | End call | End call | - |

### ⚠ CAUTION IN USING BLUETOOTH® CELLULAR PHONE

- *Do not use a cellular phone or perform Bluetooth® settings (e.g. pairing a phone) while driving.*
- *Some Bluetooth®-enabled phones may not be recognized by the system or fully compatible with the system.*
- *Before using Bluetooth® related features of the audio system, refer to your phone's User's Manual for phone-side Bluetooth® operations.*
- *The phone must be paired to the audio system to use Bluetooth® related features.*
- *You will not be able to use the hands-free feature when your phone (in the car) is outside of the cellular service area (e.g. in a tunnel, in a underground, in a mountainous area, etc.).*
- *If the cellular phone signal is poor or the vehicles interior noise is too loud, it may be difficult to hear the other person's voice during a call.*

*(Continued)*

*(Continued)*

- *Do not place the phone near or inside metallic objects, otherwise communications with Bluetooth® system or cellular service stations can be disrupted.*
- *While a phone is connected through Bluetooth® your phone may discharge quicker than usual as a result of additional Bluetooth®-related operations.*
- *Some cellular phones or other devices may cause interference noise or malfunction to audio system. In this case, storing the device in a different location may resolve the situation.*
- *Please save your phone name in English, or your phone name may not be displayed correctly.*

### ✻ NOTICE

**Bluetooth phone compatibility can be checked by visiting www.hyundaiusa.com and under the SERVICE & PARTS - BLUETOOTH COMPATIBILITY menu.**

- **Areas that can be checked - 9 areas, such as Pairing, Connection, Handsfree Calling, Streaming, etc.**

Before driving / 5-3
Key / 5-5
Engine start/stop button / 5-7
Automatic transmission / 5-11
Brake system / 5-18
Cruise control system / 5-36
Smart cruise control system / 5-40
Lane departure warning system (LDWS) / 5-51
Economical operation / 5-54
Special driving conditions / 5-56
Winter driving / 5-60

# Driving your vehicle

# 5

Vehicle load limit / 5-64
Vehicle weight / 5-69
Trailer towing / 5-70

E010000ABH-EU

**⚠ WARNING - ENGINE EXHAUST CAN BE DANGEROUS!**

Engine exhaust fumes can be extremely dangerous. If, at any time, you smell exhaust fumes inside the vehicle, open the windows immediately.

- **Do not inhale exhaust fumes.**
  Exhaust fumes contain carbon monoxide, a colorless, odorless gas that can cause unconsciousness and death by asphyxiation.
- **Be sure the exhaust system does not leak.**
  The exhaust system should be checked whenever the vehicle is raised to change the oil or for any other purpose. If you hear a change in the sound of the exhaust or if you drive over something that strikes the underneath side of the car, have the exhaust system checked as soon as possible by an authorized HYUNDAI dealer.
- **Do not run the engine in an enclosed area.**
  Letting the engine idle in your garage, even with the garage door open, is a hazardous practice. Never run the engine in your garage any longer than it takes to start the engine and back the car out.
- **Avoid idling the engine for prolonged periods with people inside the car.**
  If it is necessary to idle the engine for a prolonged period with people inside the car, be sure to do so only in an open area with the air intake set at "Fresh" and fan operating at one of the higher speeds so fresh air is drawn into the interior.

If you must drive with the trunk lid open because you are carrying objects that make this necessary:

1. Close all windows.
2. Open side vents.
3. Set the air intake control at "Fresh", the air flow control at "Floor" or "Face" and the fan at one of the higher speeds.

To assure proper operation of the ventilation system, be sure the ventilation air intakes located just in front of the windshield are kept clear of snow, ice, leaves or other obstructions.

**⚠ CALIFORNIA PROPOSITION 65 WARNING**

**Engine exhaust and a wide variety of automobile components and parts, including components found in the interior furnishings in a vehicle, contain or emit chemicals known to the State of California to cause cancer and birth defects and reproductive harm. In addition, certain fluids contained in vehicles and certain products of component wear contain or emit chemicals known to the State of California to cause cancer and birth defects or other reproductive harm.**

# BEFORE DRIVING

E020100AUN

## Before entering vehicle

- Be sure that all windows, outside mirror(s), and outside lights are clean.
- Check the condition of the tires.
- Check under the vehicle for any sign of leaks.
- Be sure there are no obstacles behind you if you intend to back up.

E020200AUN

## Necessary inspections

Fluid levels, such as engine oil, engine coolant, brake fluid, and washer fluid should be checked on a regular basis, with the exact interval depending on the fluid. Further details are provided in section 7, “Maintenance”.

**⚠ WARNING**

**Driving while distracted can result in a loss of vehicle control, that may lead to an accident, severe personal injury, and death. The driver’s primary responsibility is in the safe and legal operation of a vehicle, and use of any handheld devices, other equipment, or vehicle systems which take the driver’s eyes, attention and focus away from the safe operation of a vehicle or which are not permissible by law should never be used during operation of the vehicle.**

E020300AUN

## Before starting

- Close and lock all doors.
- Position the seat so that all controls are easily reached.
- Adjust the inside and outside rearview mirrors.
- Be sure that all lights work.
- Check all gauges.
- Check the operation of warning lights when the ignition switch is turned to the ON position.
- Release the parking brake and make sure the brake warning light goes out.

For safe operation, be sure you are familiar with your vehicle and its equipment.

**⚠ WARNING**

**All passengers must be properly belted whenever the vehicle is moving. Refer to "Seat belts" in section 3 for more information on their proper use.**

**⚠ WARNING**

**Always check the surrounding areas near your vehicle for people, especially children, before putting a car into D (Drive) or R (Reverse).**

**⚠ WARNING - Driving under the influence of alcohol or drugs**

**Drinking and driving is dangerous. Drunk driving is the number one contributor to the highway death toll each year. Even a small amount of alcohol will affect your reflexes, perceptions and judgment. Driving while under the influence of drugs is as dangerous or more dangerous than driving drunk.**

**You are much more likely to have a serious accident if you drink or take drugs and drive.**

**If you are drinking or taking drugs, don't drive. Do not ride with a driver who has been drinking or taking drugs. Choose a designated driver or call a cab.**

**⚠ WARNING**

- **When you intend to park or stop the vehicle with the engine on, be careful not to depress the accelerator pedal for a long period of time. It may overheat the engine or exhaust system and cause fire.**
- **When you make a sudden stop or turn the steering wheel rapidly, loose objects may drop on the floor and it could interfere with the operation of the foot pedals, possibly causing an accident. Keep all things in the vehicle safely stored.**
- **If you do not focus on driving, it may cause an accident. Be careful when operating controls such as the audio or heater. It is the responsibility of the driver to always be attentive to the task of driving and drive safely.**

## KEY (FOR CANADA)

OBH058001

E030100AEN

### Illuminated ignition switch

Whenever a front door is opened, the ignition switch will be illuminated for your convenience, provided the ignition switch is not in the ON position. The light will go off immediately when the ignition switch is turned on or go off after about 30 seconds when the door is closed.

OUN036002

### Ignition switch position

E030201ABH

***LOCK***

The ignition key can be removed only in the LOCK position.

When turning the ignition switch to the LOCK position, push the key inward at the ACC position and turn the key toward the LOCK position.

E030202ABH

***ACC (Accessory)***

The electrical accessories are operative.

E030203AUN

***ON***

The warning lights can be checked before the engine is started. This is the normal running position after the engine is started.

*Do not leave the ignition switch ON if the engine is not running to prevent battery discharge.*

E030204AUN

***START***

Turn the ignition switch to the START position to start the engine. The engine will crank until you release the key; then it returns to the ON position. The brake warning lamp can be checked in this position.

E030205ABH

**⚠ WARNING - Ignition switch**

- **Never turn the ignition switch to LOCK or ACC while the vehicle is moving. This would result in loss of directional control and braking function, which could cause an accident.**
- **Before leaving the driver's seat, always make sure the shift lever is engaged in P (Park), set the parking brake fully, and shut the engine off. Unexpected and sudden vehicle movement may occur if these precautions are not taken.**
- **Never reach for the ignition switch, or any other controls through the steering wheel while the vehicle is in motion. The presence of your hand or arm in this area could cause a loss of vehicle control, an accident and serious bodily injury or death.**
- **Do not place any movable objects around the driver's seat as they may move while driving, interfere with the driver and lead to an accident.**

## Starting the engine

E040000AUN-EU

**⚠ WARNING**

**Always wear appropriate shoes when operating your vehicle. Unsuitable shoes (high heels, slippers, ski boots,etc.) may interfere with your ability to use the brake and accelerator pedal.**

E040100ABH-EU

1. Make sure the parking brake is applied.
2. Place the shift lever in P (Park). Depress the brake pedal fully.
   *You can also start the engine when the shift lever is in the N (Neutral) position.*
3. Turn the ignition switch to START and hold it there until the engine starts (a maximum of 10 seconds), then release the key.
4. In extremely cold weather (below -18°C / 0°F) or after the vehicle has not been operated for several days, let the engine warm up without depressing the accelerator.

*Whether the engine is cold or warm, it should be started* ***without depressing the accelerator.***

**⚠ CAUTION**

***If the engine stalls while you are in motion, do not attempt to move the shift lever to the P (Park) position. If traffic and road conditions permit, you may put the shift lever in the N (Neutral) position while the vehicle is still moving and turn the ignition switch to the START position in an attempt to restart the engine.***

**⚠ CAUTION**

***Do not engage the starter for more than 10 seconds. If the engine stalls or fails to start, wait 5 to 10 seconds before re-engaging the starter. Improper use of the starter may damage it.***

## ENGINE START/STOP BUTTON

OBH058002

E030100ABH

### Illuminated engine start/stop button

Whenever the front door is opened, the engine start/stop button will illuminate for your convenience. The light will go off after about 30 seconds when the door is closed.

### Engine start/stop button position

E030701BBH-EU

***OFF***

To turn off the engine, press the engine start/stop button with the engine start/stop button in the ON position and the shift lever in P(Park). When you press the engine start/stop button without the shift lever in P(Park), the engine start/stop button does not turn to the OFF position, but turns to the ACC position.

### ✻ NOTICE

**When you turn off the engine, the vehicle should be stopped.**

### ⚠ WARNING

**You are able to turn off the engine (START) or vehicle power (ON), only when the vehicle is not in motion. In an emergency situation while the vehicle is in motion, you are able to turn the engine off and to the ACC position by pressing the engine start/stop button for more than 2 seconds or 3 times successively within 3 seconds. If the vehicle is still moving, you can restart the engine without depressing the brake pedal by pressing the engine start/stop button with the shift lever in the N (Neutral) position.**

E030202ABH-EU

### *ACC(Accessory)*

Press the engine start/stop button when the button is in the OFF position without depressing the brake pedal.

The electrical accessories are operative.

If you leave the engine start/stop button in the ACC position for more than 1 hour, the battery power will turn off automatically to prevent the battery from discharging.

E030203AHM

### *ON*

Press the engine start/stop button when the button is in the ACC position without depressing the brake pedal.

The warning lights can be checked before the engine is started. Do not leave the ON position if the engine is not running to prevent battery discharge.

E030704ABH

### *START*

To start the engine, press the brake pedal and press the engine start/stop button with the shift lever in the P(Park) or the N(Neutral) position.

For your safety, start the engine with the shift lever in the P(Park) position.

### ✻ NOTICE

- **If you press the engine start/stop button without depressing the brake pedal, the engine does not start and the engine start/stop button changes as follows :**
  **OFF → ACC → ON → OFF**
- **If you leave the engine start/stop button in the ACC or the ON position for a long time, the battery will be discharged.**

E030205ABH-EU

### ⚠ WARNING

- **Never press the engine start/stop button while the vehicle is in motion. This would result in the engine turning off and loss of power assist for the steering and brakes, which may lead to loss of directional control and braking function, which could cause an accident.**

**(Continued)**

**(Continued)**

- **Before leaving the driver's seat, always make sure the shift lever is engaged in P (Park), set the parking brake fully and shut the engine off. Unexpected and sudden vehicle movement may occur if these precautions are not taken.**
- **Never reach for the engine start/stop button, or any other controls through the steering wheel while the vehicle is in motion. The presence of your hand or arm in this area could cause a loss of vehicle control, an accident and serious bodily injury or death.**
- **Do not place any movable objects around the driver's seat as they may move while driving, interfere with the driver and lead to an accident.**

## Starting the engine

E040000ABH

**⚠ WARNING**

**Always wear appropriate shoes when operating your vehicle. Unsuitable shoes (high heels, slippers, ski boots, etc.) may interfere with your ability to use the brake and accelerator pedal.**

E040100ABH

1. Carry the smart key or leave it inside the vehicle.
2. Make sure the parking brake is firmly applied.
3. Place the shift lever in the P(Park) position.
4. Depress the brake pedal.
5. Press the engine start/stop button.
6. In extremely cold weather (below -18°C / 0°F) or after the vehicle has not been operated for several days, let the engine warm up without depressing the accelerator.

   Whether the engine is cold or warm, it should be started without depressing the accelerator.

**⚠ CAUTION**

***If the engine stalls while you are in motion, do not attempt to move the shift lever to the P (Park) position. If traffic and road conditions permit, you may put the shift lever in the N (Neutral) position while the vehicle is still moving and press the engine start/stop button in an attempt to restart the engine.***

- Even if the smart key is in the vehicle, if it is far away from you, the engine may not start.
- When the engine start/stop button is in the ACC or ON position, if any door is open, the system checks for the smart key. If the smart key is not in the vehicle, the warning, "Key is not in vehicle" will come on, and if all doors are closed, the chime will also sound for about 5 seconds. The indicator will turn off while the vehicle is moving. Keep the smart key in the vehicle when using the ACC position or if the vehicle engine is on.

**⚠ WARNING**

**The engine will start by pressing the engine start/stop button, only when the smart key is in the vehicle. Never allow children or any person who is unfamiliar with the vehicle to touch the engine start/stop button or related parts.**

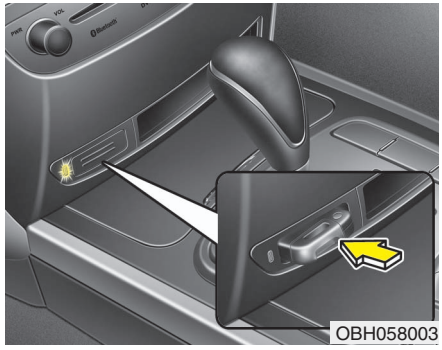


## ✻ NOTICE

- **If the battery is weak or the smart key does not work correctly, you can start the engine by inserting the smart key into the smart key holder. To eject the smart key from the smart key holder, press the smart key inward past the detent and then pull the key outward.**
- **When the stop lamp fuse is blown, you can't start the engine normally. Replace the fuse with a new one. If you are not able to replace the fuse, you can start the engine by pressing the engine start/stop button for 10 seconds with the engine start/stop button in ACC. The engine can start without depressing the brake pedal. But for your safety always depress the brake pedal before starting the engine.**

## ⚠ CAUTION

- ***Do not press the engine start/stop button for more than 5 seconds except when the stop lamp fuse is disconnected.***
- ***When you eject the smart key from the smart key holder, press the smart key inward and pull it out. If you pull out the smart key forcibly without pushing the smart key, the smart key holder may be damaged and couldn't operate normally.***

## AUTOMATIC TRANSMISSION

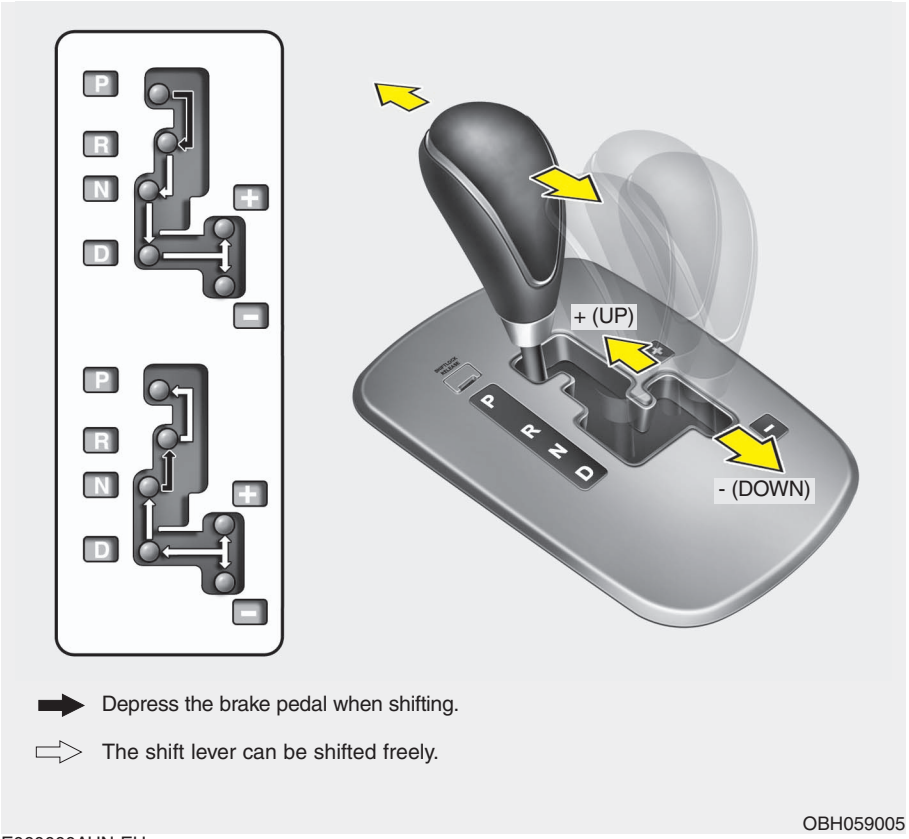


E060000AUN-EU

E060100ABH

### Automatic transmission operation

The automatic transmission has 8 forward speeds and one reverse speed. The individual speeds are selected automatically, depending on the position of the shift lever.

### ✻ NOTICE

**The first few shifts on a new vehicle may be somewhat abrupt.**

*Always depress the brake pedal when shifting from N (Neutral) to a forward or reverse gear.*

**⚠ WARNING - Automatic transmission**

- **Always check the surrounding areas near your vehicle for people, especially children, before shifting a car into D (Drive) or R (Reverse).**
- **Before leaving the driver's seat, always make sure the shift lever is in the P (Park) position; then set the parking brake fully and shut the engine off. Unexpected and sudden vehicle movement can occur if these precautions are not followed in the order identified.**

**⚠ CAUTION**

- ***To avoid damage to your transmission, do not accelerate the engine in R (Reverse) or any forward gear position with the brakes on.***
- ***When stopped on an incline, do not hold the vehicle stationary with engine power. Use the service brake or the parking brake.***
- ***Do not shift from N (Neutral) or P (Park) into D (Drive), or R (Reverse) when the engine is above idle speed.***

E060101ABH

### *Transmission ranges*

The indicator in the instrument cluster displays the shift lever position when the ignition switch is in the ON position.

#### P (Park)

Always come to a complete stop before shifting into P (Park). This position locks the transmission and prevents the drive wheels from rotating.

**⚠ WARNING**

- **Shifting into P (Park) while the vehicle is in motion will cause the drive wheels to lock which will cause you to lose control of the vehicle.**
- **Do not use the P (Park) position in place of the parking brake. Always make sure the shift lever is latched in the P (Park) position and set the parking brake fully.**
- **Never leave a child unattended in a vehicle.**

⚠ **CAUTION**

***The transmission may be damaged if you shift into P (Park) while the vehicle is in motion.***

**R (Reverse)**

Use this position to drive the vehicle backward.

⚠ **CAUTION**

***Always come to a complete stop before shifting into or out of R (Reverse); you may damage the transmission if you shift into R (Reverse) while the vehicle is in motion, except as explained in "Rocking the vehicle" in this section.***

**N (Neutral)**

The wheels and transmission are not engaged. The vehicle will roll freely even on the slightest incline unless the parking brake or service brakes are applied.

**D (Drive)**

This is the normal forward driving position. The transmission will automatically shift through a 8-gear sequence, providing the best fuel economy and power.

For extra power when passing another vehicle or climbing grades, depress the accelerator fully, at which time the transmission will automatically downshift to the next lower gear (or gears, as appropriate).

✻ **NOTICE**

**Always come to a complete stop before shifting into D (Drive).**

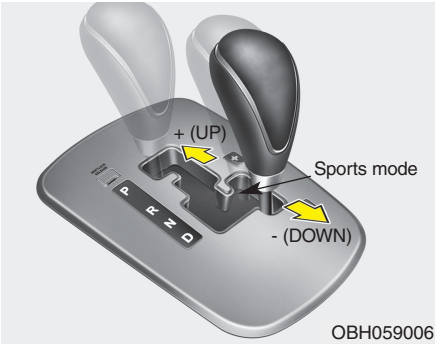


**Sports mode**

Whether the vehicle is stationary or in motion, sports mode is selected by pushing the shift lever from the D (Drive) position into the manual gate. To return to D (Drive) range operation, push the shift lever back into the main gate.

In sports mode, moving the shift lever backwards and forwards will allow you to make gearshifts rapidly.

Up (+) : Push the lever forward once to shift up one gear.

Down (-) : Pull the lever backwards once to shift down one gear.

## ✻ NOTICE

- **In sports mode, the driver must execute upshifts in accordance with road conditions, taking care to keep the engine speed below the red zone.**
- **In sports mode, only the 8 forward gears can be selected. To reverse or park the vehicle, move the shift lever to the R (Reverse) or P (Park) position as required.**
- **In sports mode, downshifts are made automatically when the vehicle slows down. When the vehicle stops, 1st gear is automatically selected.**
- **In sports mode, when the engine rpm approaches the red zone the transmission will upshift automatically.**
- **If the driver moves the lever to +(up) or -(down) position, the transmission may not make the requested gear change if the next gear is outside of the allowable engine rpm range.**
- **When driving on a slippery road, push the shift lever forward into the +(up) position. This causes the transmission to shift into the 2nd (or 3rd) gear which is better for smooth driving on a slippery road. Push the shift lever to the -(down) side to shift back to the 1st gear.**

E060102BBH

### *Shift lock system*

For your safety, the automatic transmission has a shift lock system which prevents shifting the transmission from P (Park) or N (Neutral) into R (Reverse) unless the brake pedal is depressed.

To shift the transmission from P (Park) or N (Neutral) into R (Reverse):

1. Depress and hold the brake pedal.
2. Start the engine or turn the ignition switch to the ON position.
3. Move the shift lever.

If the brake pedal is repeatedly depressed and released with the shift lever in the P (Park) position, a chattering noise near the shift lever may be heard. This is a normal condition.

## ⚠ WARNING

**Always fully depress the brake pedal before and while shifting out of the P (Park) position into another position to avoid inadvertent motion of the vehicle which could injure persons in or around the car.**

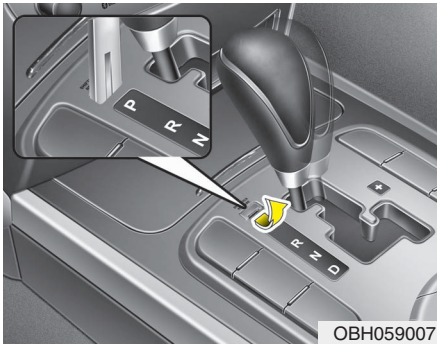

OBH059007

**Shift-lock override**

If the shift lever cannot be moved from the P (Park) or N (Neutral) position into R (Reverse) position with the brake pedal depressed, continue depressing the brake, then do the following:

1. Carefully remove the cap covering the shift-lock access hole.
2. Insert a key (or screwdriver) into the access hole and press down on the key (or screwdriver).
3. Move the shift lever.
4. Have your vehicle inspected by an authorized HYUNDAI dealer immediately.

E060103AUN

### *Ignition key interlock system*

The ignition key cannot be removed unless the shift lever is in the P (Park) position. If the ignition switch is in any other position, the key cannot be removed.

E060200AEN

## Good driving practices

- Never move the gear shift lever from P (Park) or N (Neutral) to any other position with the accelerator pedal depressed.
- Never move the gear shift lever into P (Park) when the vehicle is in motion.
- Be sure the car is completely stopped before you attempt to shift into R (Reverse) or D (Drive).
- Never take the car out of gear and coast down a hill. This may be extremely hazardous. Always leave the car in gear when moving.
- Do not "ride" the brakes. This can cause them to overheat and malfunction. Instead, when you are driving down a long hill, slow down, shift into Sports Mode and shift to a lower gear. When you do this, engine braking will help slow the car.
- Slow down before shifting to a lower gear. Otherwise, the lower gear may not be engaged.

- Always use the parking brake. Do not depend on placing the transmission in P (Park) to keep the car from moving.
- Exercise extreme caution when driving on a slippery surface. Be especially careful when braking, accelerating or shifting gears. On a slippery surface, an abrupt change in vehicle speed can cause the drive wheels to lose traction and the vehicle to go out of control.
- Optimum vehicle performance and economy is obtained by smoothly depressing and releasing the accelerator pedal.

**⚠ WARNING**

- **Always buckle-up! In a collision, an unbelted occupant is significantly more likely to be seriously injured or killed than a properly belted occupant.**
- **Avoid high speeds when cornering or turning.**
- **Do not make quick steering wheel movements, such as sharp lane changes or fast, sharp turns.**
- **The risk of rollover is greatly increased if you lose control of your vehicle at highway speeds.**
- **Loss of control often occurs if two or more wheels drop off the roadway and the driver oversteers to reenter the roadway.**
- **In the event your vehicle leaves the roadway, do not steer sharply. Instead, slow down before pulling back into the travel lanes.**
- **Never exceed posted speed limits.**

**⚠ WARNING**

**If your vehicle becomes stuck in snow, mud, sand, etc., then you may attempt to rock the vehicle free by moving it forward and backward. Do not attempt this procedure if people or objects are anywhere near the vehicle. During the rocking operation the vehicle may suddenly move forward or backward as it becomes unstuck, causing injury or damage to nearby people or objects.**

E060203AUN

### *Moving up a steep grade from a standing start*

To move up a steep grade from a standing start, depress the brake pedal, shift the shift lever to D (Drive) and release the parking brake. Depress the accelerator gradually while releasing the service brakes.

**When accelerating from a stop on a steep hill, the vehicle may have a tendency to roll backwards. Shifting the shift lever into 2 (Second Gear) will help prevent the vehicle from rolling backwards.**

## BRAKE SYSTEM

E070100ABH

### Power brakes

Your vehicle has power-assisted brakes that adjust automatically through normal usage.

In the event that the power-assisted brakes lose power because of a stalled engine or some other reason, you can still stop your vehicle by applying greater force to the brake pedal than you normally would. The stopping distance, however, will be longer.

When the engine is not running, the reserve brake power is partially depleted each time the brake pedal is applied. Do not pump the brake pedal when the power assist has been interrupted.

Pump the brake pedal only when necessary to maintain steering control on slippery surfaces.

**⚠ WARNING - Brakes**

- **Do not drive with your foot resting on the brake pedal. This will create abnormal high brake temperatures, excessive brake lining and pad wear, and increased stopping distances.**

**(Continued)**

**(Continued)**

- **When descending a long or steep hill, shift to a lower gear and avoid continuous application of the brakes. Continuous brake application will cause the brakes to overheat and could result in a temporary loss of braking performance.**
- **Wet brakes may impair the vehicle's ability to safely slow down; the vehicle may also pull to one side when the brakes are applied. Applying the brakes lightly will indicate whether they have been affected in this way. Always test your brakes in this fashion after driving through deep water. To dry the brakes, apply them lightly while maintaining a safe forward speed until brake performance returns to normal.**
- **Always confirm the position of the brake and accelerator pedal before driving. If you do not check the position of the accelerator and brake pedal before driving, you may depress the accelerator instead of the brake pedal. It may cause a serious accident.**

E070101AUN

### *In the event of brake failure*

If service brakes fail to operate while the vehicle is in motion, you can make an emergency stop with the parking brake. The stopping distance, however, will be much greater than normal.

**⚠ WARNING - Parking brake**

**Applying the parking brake while the vehicle is moving at normal speeds can cause a sudden loss of control of the vehicle. If you must use the parking brake to stop the vehicle, use great caution in applying the brake.**

E070102AUN

### *Disc brakes wear indicator*

Your vehicle has disc brakes.

When your brake pads are worn and new pads are required, you will hear a high-pitched warning sound from your front brakes or rear brakes. You may hear this sound come and go or it may occur whenever you depress the brake pedal.

Please remember that some driving conditions or climates may cause a brake squeal when you first apply (or lightly apply) the brakes. This is normal and does not indicate a problem with your brakes.

**⚠ CAUTION**

- ***To avoid costly brake repairs, do not continue to drive with worn brake pads.***
- ***Always replace brake pads as complete front or rear axle sets.***

**⚠ WARNING - Brake wear**

**This brake wear warning sound means your vehicle needs service. If you ignore this audible warning, you will eventually lose braking performance, which could lead to a serious accident.**

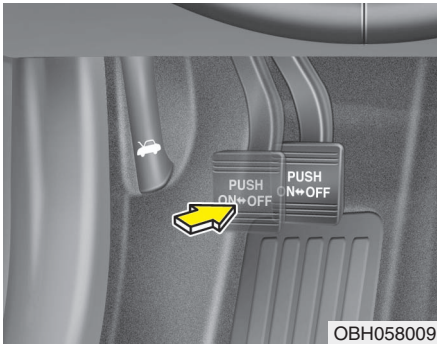

OBH058009

## Foot parking brake (if equipped)

E070201ABH

### *Applying the parking brake*

To engage the parking brake, first apply the foot brake and then depress the parking brake pedal down as far as possible. In addition it is recommended that when parking the vehicle on an incline, the shift lever should be in the P (Park) position.

**⚠ WARNING**

- **Driving with the parking brake applied will cause excessive brake pad and brake rotor wear.**
- **Do not operate the parking brake while the vehicle is moving except in an emergency situation. It could damage the brake system and lead to an accident.**

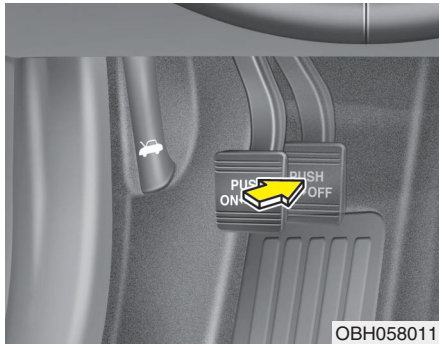


E070202ABH

### *Releasing the parking brake*

To release the parking brake, depress the parking brake pedal a second time while applying the foot brake. The pedal will automatically extend to the fully released position. If the parking brake pedal does not release or does not release all the way, have the system checked by an authorized HYUNDAI dealer.

**⚠ WARNING**

- **To prevent unintentional movement when stopped and leaving the vehicle, do not use the gearshift lever in place of the parking brake. Set the parking brake AND make sure the gearshift lever is securely positioned in P (Park).**
- **Never allow anyone who is unfamiliar with the vehicle to touch the parking brake. If the parking brake is released unintentionally, serious injury may occur.**
- **All vehicles should always have the parking brake fully engaged when parking to avoid inadvertent movement of the car which can injure occupants or pedestrians.**

Check the brake warning light by turning the ignition switch ON (do not start the engine). This light will be illuminated when the parking brake is applied with the ignition switch in the START or ON position.

Before driving, be sure the parking brake is fully released and the brake warning light is off.

If the brake warning light remains on after the parking brake is released while engine is running, there may be a malfunction in the brake system. Immediate attention is necessary.

If at all possible, cease driving the vehicle immediately. If that is not possible, use extreme caution while operating the vehicle and only continue to drive the vehicle until you can reach a safe location or repair shop.

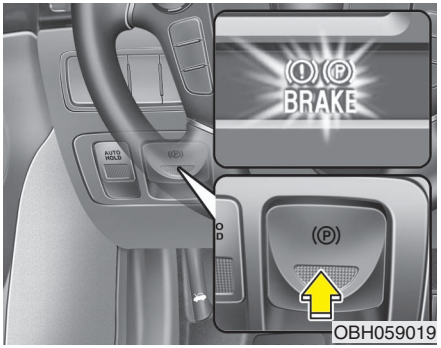


## Electric parking brake (EPB) (if equipped)

E070203BBH

### *Applying the parking brake*

To apply the parking brake, first apply the brake pedal and press the EPB switch. Make sure that the brake warning light comes on.

When parking the vehicle on an incline, the shift lever must be in the P (Park) position.

**⚠ WARNING**

**Do not operate the parking brake while the vehicle is moving except in an emergency situation. It could damage the brake system and lead to an accident.**

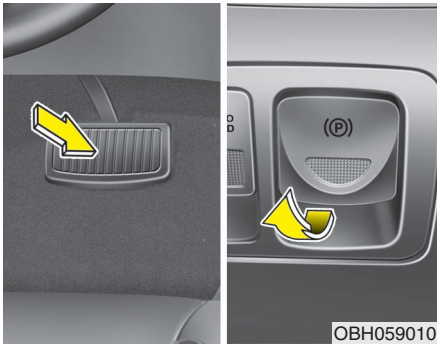


E070704BBH

### *Releasing the parking brake*

The parking brake will be released automatically when you shift the transmission from P (Park) to R (Reverse), N (Neutral) or D (Drive) while pressing the foot brake pedal.

To release the parking brake manually with the ignition switch ON, pull the EPB switch while applying the foot brake. Make sure that the brake warning light goes off.

If the parking brake does not release or does not release all the way, have the system checked by an authorized HYUNDAI dealer.

**✻ NOTICE**

- **For your safety, you can apply the EPB even though the ignition switch is in the OFF position, but you cannot release it.**
- **For your safety, press the foot brake and release the parking brake manually with EPB switch when you drive downhill or back up the vehicle.**

Type I

OBH059057N

Type II

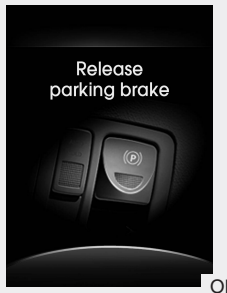


OBH049340N

### ⚠ CAUTION

***If you try to drive by applying the accelerator pedal with EPB engaged, a warning will sound and message will appear. Do not apply the accelerator pedal while the parking brake is engaged. Damage to the parking brake may occur.***

### ⚠ WARNING

- **To prevent unintentional movement when stopped and leaving the vehicle, do not use the shift lever in place of the parking brake. Set the parking brake and make sure the shift lever is securely positioned in P (Park).**
- **Never allow anyone who is unfamiliar with the vehicle to touch the parking brake. If the parking brake is released unintentionally, serious injury may occur.**
- **All vehicles should always have the parking brake fully engaged when parking to avoid inadvertent movement of the car which can injure occupants or pedestrians.**

### ⚠ CAUTION

- ***A click sound may be heard while operating or releasing the EPB. These conditions are normal and indicate that the EPB is functioning properly.***
- ***When leaving your keys with a parking lot attendant or valet, make sure to inform him/her how to operate the EPB.***

W-75

Check the brake warning light by turning the ignition switch ON (do not start the engine). This light will be illuminated when the parking brake is applied with the ignition switch in the START or ON position.

Before driving, be sure the parking brake is fully released and the brake warning light is off.

If the brake warning light remains on after the parking brake is released while engine is running, there may be a malfunction in the brake system. Immediate attention is necessary.

If at all possible, cease driving the vehicle immediately. If that is not possible, use extreme caution while operating the vehicle and only continue to drive the vehicle until you can reach a safe location.

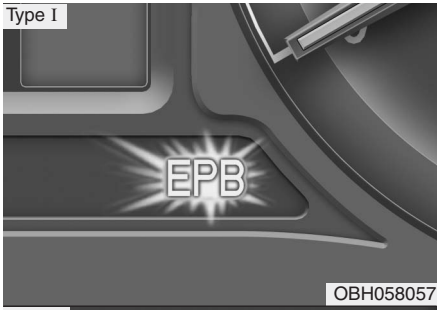


OBH058057

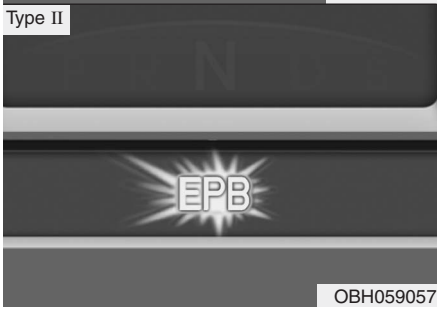


OBH059057

E070703ABH

***EPB malfunction indicator (if equipped)***

The EPB malfunction indicator will illuminate when the ignition switch is turned ON, but should go off after approximately 3 seconds, if the system is operating normally.

If the EPB malfunction indicator remains on, comes on while driving, or does not come on when the ignition switch is turned to the ON position, this indicates that the EPB may have malfunctioned.

Take your vehicle to an authorized HYUNDAI dealer and have the system checked.

The EPB malfunction indicator may illuminate when the ESC indicator comes on to indicate that the ESC is not working properly, but it does not indicate a malfunction of the EPB.

E070704BBH

## Emergency braking

If there is a problem with the foot brake while driving, emergency braking is possible by pressing and holding the EPB switch. Braking is possible only while you are holding the EPB switch.

**⚠ WARNING**

**Do not operate the parking brake while the vehicle is moving except in an emergency situation. It could damage the brake system and lead to an accident.**

**✻ NOTICE**

**During emergency braking by the EPB, the parking brake warning light will illuminate to indicate that the system is operating.**

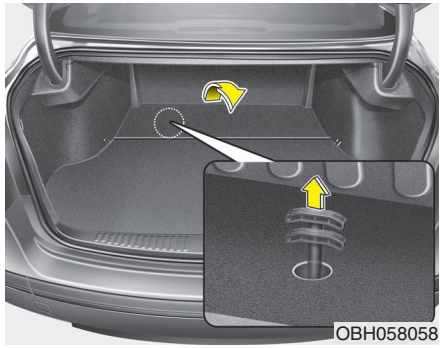


E070706BBH

## EPB emergency release

If the EPB does not release properly, follow these steps:

1. Shift the shift lever into P (Park).
2. Block the wheels.
3. Open the trunk and remove the cover.
4. Remove the emergency release handle from the tool case.
5. Remove the emergency release cable cover.
6. Install the emergency release handle into the threaded end of the emergency release cable by turning it clockwise.
7. Pull up the handle until sounds a "took". The EPB warning light blinks.

Type I

Type II

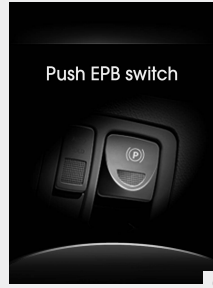


8. After using the EPB emergency release, a warning message will come on. You should operate the EPB switch for the vehicle to return to its normal condition. If the vehicle does not return to normal condition, take your vehicle to an authorized HYUNDAI dealer and have the system checked.

**⚠ WARNING**

**Do not operate the parking brake while the vehicle is moving except in an emergency situation. It could damage the brake system and lead to an accident.**

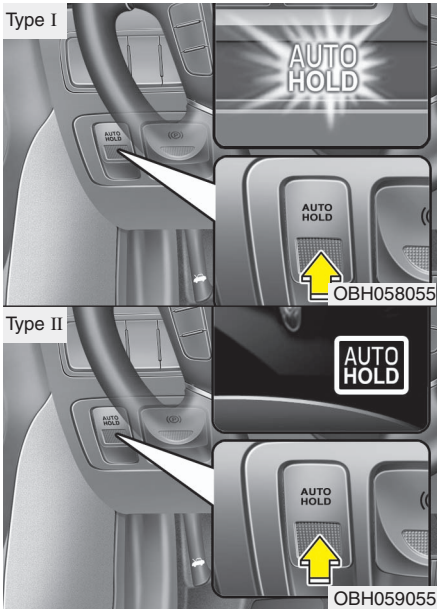


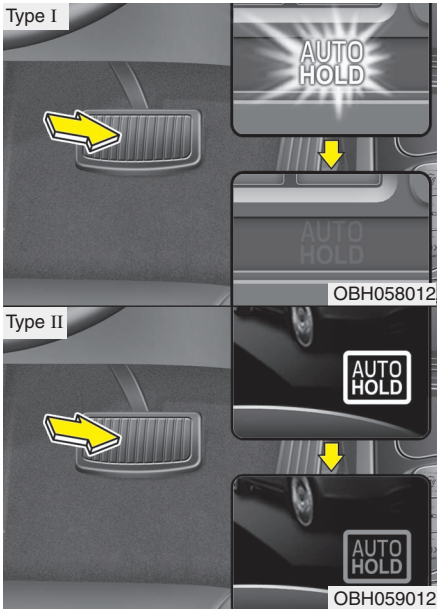


## AUTO HOLD (if equipped)

E070800BBH

The AUTO HOLD keeps the vehicle stopped after the driver brings the vehicle to a complete stop with the foot brake and releases the brake pedal.

F070801BBH

### *Set up*

1. Press the AUTO HOLD switch. The white AUTO HOLD indicator will illuminate and the system will be in the standby position.
2. When you stop the vehicle completely by pressing the brake pedal, the AUTO HOLD maintains the brake pressure in order to hold the vehicle stationary. The indicator changes from white to green.
3. The vehicle will remain stationary even if you release the foot brake pedal.

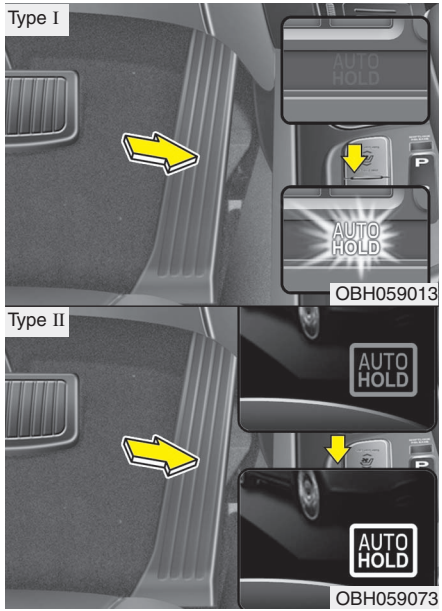


**Leaving**

If you press the accelerator pedal with the transmission in R (Reverse), D (Drive) or sports mode, the AUTO HOLD will be released automatically and the vehicle will start to move. The indicator changes from green to white.

**⚠ WARNING**

**When driving off from AUTO HOLD by applying accelerator pedal, always check the surrounding area near your vehicle.**

**Slowly press the accelerator pedal for a smooth launch.**

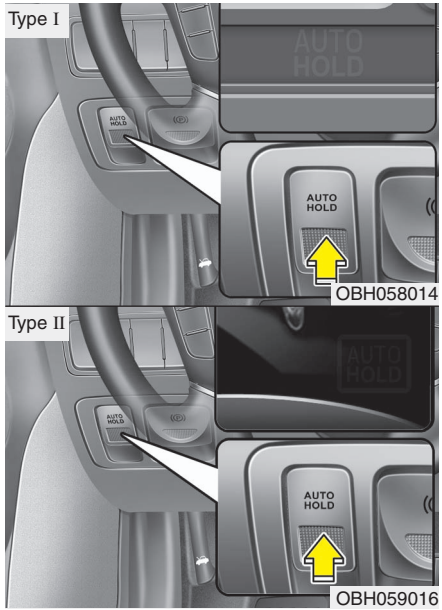


F070802BBH

***Cancel***

To cancel the AUTO HOLD operation, press the AUTO HOLD switch. The AUTO HOLD indicator will go out.

Type I

Type II

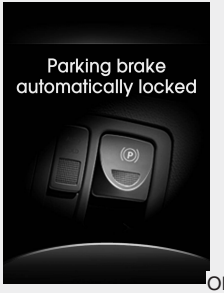


## ✻ NOTICE

- **The AUTO HOLD does not operate when;**
  **- the driver's door is open.**
  **- the shift lever is in P (Park).**

- **For your safety, the AUTO HOLD automatically switches to EPB in such cases as**
  **- the hood is open with transmission in D (Drive).**
  **- the trunk lid is open with transmission in R (Reverse).**
  **- the driver's seat belt is unbuckled and the driver's door is open.**
  **- AUTO HOLD is operating for a long period of time.**
  **- the vehicle is standing on a steep slope.**
  **In these cases, the brake warning light comes on, the AUTO HOLD indicator changes from green to white, and warning sounds and a message will appear to inform you that EPB has been automatically engaged.**
  **Before driving again, press the foot brake pedal, check the surrounding area near your vehicle and release the parking brake manually with the EPB switch.**

- **When AUTO HOLD is ON and the vehicle comes to a stop on a steep slope (about 25% gradient or more), the EPB will be automatically engaged. In this case, when you release EPB manually by pulling the EPB switch with the foot brake pedal pressed, AUTO HOLD will hold the vehicle for 3 seconds in order to prevent the vehicle from rolling back during the launch.**
- **If the AUTO HOLD malfunction indicator lights up yellow on the LCD screen, the AUTO HOLD is not working properly. Take your vehicle to an authorized HYUNDAI dealer and have the system checked.**

**⚠ WARNING**

- **Press the accelerator pedal slowly when you start the vehicle.**
- **For your safety, cancel the AUTO HOLD when you drive downhill or back up the vehicle or park the vehicle.**

**⚠ CAUTION**

***If there is a malfunction with the driver's door, hood or trunk open detection system, the AUTO HOLD may not work properly.***

***Take your vehicle to an authorized HYUNDAI dealer and have the system checked.***

E070300AEN-EE

## Anti-lock brake system (ABS)

**⚠ WARNING**

**ABS (or ESC) will not prevent accidents due to improper or dangerous driving maneuvers. Even though vehicle control is improved during emergency braking, always maintain a safe distance between you and objects ahead. Vehicle speeds should always be reduced during extreme road conditions.**

**The braking distance for cars equipped with an anti-lock braking system (or Electronic Stability Control system) may be longer than for those without it in the following road conditions.**

**During these conditions the vehicle should be driven at reduced speeds:**

- **Rough, gravel or snow-covered roads.**
- **With tire chains installed.**

**(Continued)**

**(Continued)**

- **On roads where the road surface is pitted or has different surface height.**

**The safety features of an ABS (or ESC) equipped vehicle should not be tested by high speed driving or cornering. This could endanger the safety of yourself or others.**

The ABS continuously senses the speed of the wheels. If the wheels are going to lock, the ABS system repeatedly modulates the hydraulic brake pressure to the wheels.

When you apply your brakes under conditions which may lock the wheels, you may hear a “tik-tik” sound from the brakes, or feel a corresponding sensation in the brake pedal. This is normal and it means your ABS is active.

In order to obtain the maximum benefit from your ABS in an emergency situation, do not attempt to modulate your brake pressure and do not try to pump your brakes. Press your brake pedal as hard as possible or as hard as the situation warrants and allow the ABS to control the force being delivered to the brakes.

### ✻ NOTICE

**A click sound may be heard in the engine compartment when the vehicle begins to move after the engine is started. These conditions are normal and indicate that the anti-lock brake system is functioning properly.**

- Even with the anti-lock brake system, your vehicle still requires sufficient stopping distance. Always maintain a safe distance from the vehicle in front of you.
- Always slow down when cornering. The anti-lock brake system cannot prevent accidents resulting from excessive speeds.
- On loose or uneven road surfaces, operation of the anti-lock brake system may result in a longer stopping distance than for vehicles equipped with a conventional brake system.

W-78

### ⚠ CAUTION

- ***If the ABS warning light is on and stays on, you may have a problem with the ABS. In this case, however, your regular brakes will work normally.***
- ***The ABS warning light will stay on for approximately 3 seconds after the ignition switch is ON. During that time, the ABS will go through self-diagnosis and the light will go off if everything is normal. If the light stays on, you may have a problem with your ABS. Contact an authorized HYUNDAI dealer as soon as possible.***

### ⚠ CAUTION

- *When you drive on a road having poor traction, such as an icy road, and operate your brakes continuously, the ABS will be active continuously and the ABS warning light may illuminate. Pull your car over to a safe place and stop the engine.*
- *Restart the engine. If the ABS warning light is off, then your ABS system is normal. Otherwise, you may have a problem with the ABS. Contact an authorized HYUNDAI dealer as soon as possible.*

### ✻ NOTICE

**When you jump start your vehicle because of a drained battery, the engine may not run as smoothly and the ABS warning light may turn on at the same time. This happens because of the low battery voltage. It does not mean your ABS is malfunctioning.**

- **Do not pump your brakes!**
- **Have the battery recharged before driving the vehicle.**

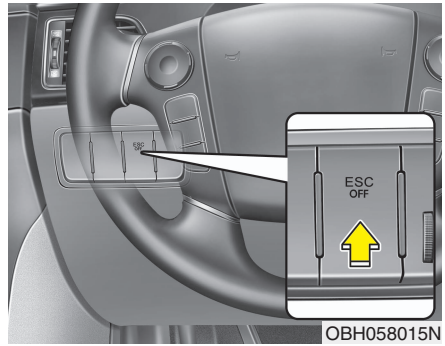

OBH058015N

E070500AUN-EU

## Electronic stability control (ESC)

The Electronic Stability control (ESC) system is designed to stabilize the vehicle during cornering maneuvers. ESC checks where you are steering and where the vehicle is actually going. ESC applies the brakes at individual wheels and intervenes in the engine management system to stabilize the vehicle.

### ⚠ WARNING

**Never drive too fast for the road conditions or too quickly when cornering. Electronic stability control (ESC) will not prevent accidents. Excessive speed in turns, abrupt maneuvers and hydroplaning on wet surfaces can still result in serious accidents. Only a safe and attentive driver can prevent accidents by avoiding maneuvers that cause the vehicle to lose traction. Even with ESC installed, always follow all the normal precautions for driving - including driving at safe speeds for the conditions.**

The Electronic Stability Control (ESC) system is an electronic system designed to help the driver maintain vehicle control under adverse conditions. It is not a substitute for safe driving practices. Factors including speed, road conditions and driver steering input can all affect whether ESC will be effective in preventing a loss of control. It is still your responsibility to drive and corner at reasonable speeds and to leave a sufficient margin of safety.

When you apply your brakes under conditions which may lock the wheels, you may hear a “tik-tik” sound from the brakes, or feel a corresponding sensation in the brake pedal. This is normal and it means your ESC is active.

## ✻ NOTICE

**A click sound may be heard in the engine compartment when the vehicle begins to move after the engine is started. These conditions are normal and indicate that the Electronic Stability Control System is functioning properly.**

E070501ABH-EU

### *ESC operation*

**ESC ON condition**

- When the ignition is turned ON, ESC and ESC OFF indicator lights illuminate for approximately 3 seconds, then ESC is turned on.
- Press the ESC OFF button for at least half a second after turning the ignition ON to turn ESC off. (ESC OFF indicator will illuminate). To turn the ESC on, press the ESC OFF button (ESC OFF indicator light will go off).
- When starting the engine, you may hear a slight ticking sound. This is the ESC performing an automatic system self-check and does not indicate a problem.

**When operating**

When the ESC is in operation, the ESC indicator light blinks.

- When the Electronic Stability Control is operating properly, you can feel a slight pulsation in the vehicle. This is only the effect of brake control and indicates nothing unusual.
- When moving out of the mud or driving on a slippery road, the engine rpm (revolution per minute) may not be increased even if you press the accelerator pedal deeply. This is to maintain the stability and traction of the vehicle and does not indicate a problem.

E070502AUN-EU

### *ESC operation off*

**ESC OFF state**

- To cancel ESC operation, press the ESC OFF button (ESC OFF indicator light illuminates).
- If the ignition switch is turned to LOCK position when ESC is off, ESC remains off. Upon restarting the engine, the ESC will automatically turn on again.

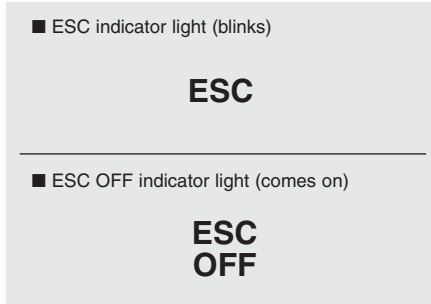


E070503BBH-EU

### *Indicator light*

When the ignition switch is turned ON, the ESC indicator light illuminates, then goes off if ESC system is operating normally.

The ESC indicator stays on when the ESC may have a malfunction. Take your car to an authorized HYUNDAI dealer and have the system checked.

The ESC indicator light blinks whenever ESC is operating.

To switch to ESC OFF mode, press the ESC OFF button. The ESC OFF indicator will illuminate indicating the ESC is deactivated.

E070505ABH-EU

### *Warning light*

If this warning light illuminates, your vehicle may have a malfunction with the ESC system. When this warning light illuminates, EPB and SCC warning light may also illuminate at the same time.

Have the vehicle checked by an authorized HYUNDAI dealer as soon as possible.

**⚠ CAUTION**

***Driving with varying tire or wheel sizes may cause the ESC system to malfunction. When replacing tires, make sure they are the same size as your original tires.***

***Never operate the vehicle with different diameter tires installed at the same time.***

**⚠ WARNING**

**The Electronic Stability Control system is only a driving aid; use precautions for safe driving by slowing down on curved, snowy, or icy roads. Drive slowly and don't attempt to accelerate whenever the ESC indicator light is blinking, or when the road surface is slippery.**

E070504ABH-EU

### *ESC OFF usage*

**When driving**

- ESC should be turned on for daily driving whenever possible.
- To turn ESC off while driving, press the ESC OFF button while driving on a flat road surface.

Never press the ESC OFF button while ESC is operating (ESC indicator light blinks).

If ESC is turned off while ESC is operating, the vehicle may slip out of control.

**✻ NOTICE**

- **When operating the vehicle on a dynamometer, ensure that the ESC is turned off (ESC OFF light illuminated).**
- **Turning the ESC off does not affect ABS or brake system operation.**

**⚠ WARNING**

**Never press the ESC OFF button while ESC is operating.**

**If the ESC is turned off while ESC is operating, the vehicle may go out of control.**

**To turn ESC off while driving, press the ESC OFF button while driving on a flat road surface.**

E070600BFD

## Good braking practices

**⚠ WARNING**

- **Whenever leaving vehicle or parking, always set the parking brake as far as possible and fully engage the vehicle's transmission into the park position. Vehicles not fully engaged in park with the parking brake set are at risk for moving inadvertently and injuring yourself or others.**
- **All vehicles should always have the parking brake fully engaged when parking to avoid inadvertent movement of the car which can injure occupants or pedestrians.**

- After parking the vehicle, check to be sure the parking brake is not engaged and that the parking brake indicator light is out before driving away.
- Driving through water may get the brakes wet. They can also get wet when the car is washed. Wet brakes can be dangerous! Your car will not stop as quickly if the brakes are wet. Wet brakes may cause the car to pull to one side.

  To dry the brakes, apply the brakes lightly until the braking action returns to normal, taking care to keep the car under control at all times. If the braking action does not return to normal, stop as soon as it is safe to do so and call an authorized HYUNDAI dealer for assistance.
- Do not coast down hills with the car out of gear. This is extremely hazardous. Keep the car in gear at all times, use the brakes to slow down, then shift to a lower gear so that engine braking will help you maintain a safe speed.
- Do not "ride" the brake pedal. Resting your foot on the brake pedal while driving can be dangerous because it can result in the brakes overheating and losing their effectiveness. It also increases the wear of the brake components.
- If a tire goes flat while you are driving, apply the brakes gently and keep the car pointed straight ahead while you slow down. When you are moving slowly enough for it to be safe to do so, pull off the road and stop in a safe place.
- If your car is equipped with an automatic transmission, do not let your car creep forward. To avoid creeping forward, keep your foot firmly on the brake pedal when the car is stopped.

- Be careful when parking on a hill. Firmly engage the parking brake and place the gear selector lever in P. If your car is facing downhill, turn the front wheels into the curb to help keep the car from rolling. If your car is facing uphill, turn the front wheels away from the curb to help keep the car from rolling. If there is no curb or if it is required by other conditions to keep the car from rolling, block the wheels.
- Under some conditions your parking brake can freeze in the engaged position. This is most likely to happen when there is an accumulation of snow or ice around or near the rear brakes or if the brakes are wet. If there is a risk that the parking brake may freeze, apply it only temporarily while you put the gear selector lever in P (automatic transmission) and block the rear wheels so the car cannot roll. Then release the parking brake.
- Do not hold the vehicle on an incline with the accelerator pedal. This can cause the transmission to overheat. Always use the brake pedal or parking brake.

## CRUISE CONTROL SYSTEM (IF EQUIPPED)

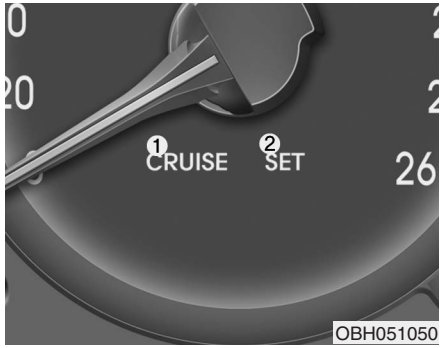


① CRUISE indicator
② SET indicator

E090000ABH-EU

The cruise control system allows you to program the vehicle to maintain a constant speed without pressing the accelerator pedal.

This system is designed to function above approximately 25 mph (40 km/h).

### ⚠ WARNING

- **If the cruise control is left on, (CRUISE indicator light in the instrument cluster illuminated) the cruise control can be activated unintentionally. Keep the cruise control system off (CRUISE indicator light OFF) when the cruise control is not in use, to avoid inadvertently setting a speed.**
- **Use the cruise control system only when traveling on open highways in good weather.**
- **Do not use the cruise control when it may not be safe to keep the car at a constant speed, for instance, driving in heavy or varying traffic, or on slippery (rainy, icy or snow-covered) or winding roads or over 6% up-hill or down-hill roads.**
- **Pay particular attention to the driving conditions whenever using the cruise control system.**
- **Be careful when driving downhill using the cruise control system, which may increase the vehicle speed.**

### ✻ NOTICE

**During normal cruise control operation, when the SET switch is activated or reactivated after applying the brakes, the cruise control will energize after approximately 3 seconds. This delay is normal.**

OBH058020

E090100ABH-EU

## To set cruise control speed:

1. Push the cruise ON-OFF button on the steering wheel to turn the system on. The CRUISE indicator light in the instrument cluster will illuminate.
2. Accelerate to the desired speed, which must be more than 25 mph (40 km/h).

OBH058021

3. Push the SET- switch, and release it at the desired speed. The SET indicator light in the instrument cluster will illuminate. Release the accelerator pedal. The desired speed will automatically be maintained.

*On a steep grade, the vehicle may slow down or speed up slightly while going uphill or downhill.*

OBH058022

E090200ABH-EU

## To increase cruise control set speed:

Follow either of these procedures:

- Push the RES+ switch and hold it. Your vehicle will accelerate. Release the switch at the speed you want.
- Push the RES+ switch and release it immediately. The cruising speed will increase 1.0 mph (1.6 km/h) each time the RES+ switch is operated in this manner.

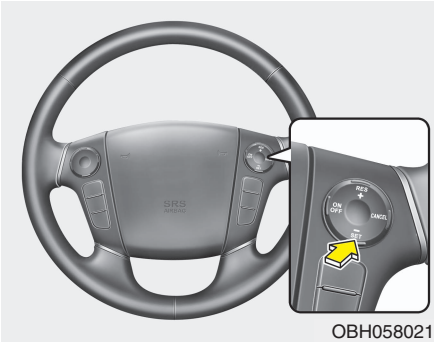

OBH058021

E090300ABH-EU

### To decrease the cruising speed:

Follow either of these procedures:

- Push the SET- switch and hold it. Your vehicle will gradually slow down. Release the switch at the speed you want to maintain.
- Push the SET- switch and release it immediately. The cruising speed will decrease 1.0 mph (1.6 km/h) each time the SET- switch is operated in this manner.

E090400ABH

### To temporarily accelerate with the cruise control on:

If you want to speed up temporarily when the cruise control is on, depress the accelerator pedal. Increased speed will not interfere with cruise control operation or change the set speed.

To return to the set speed, take your foot off the accelerator.

If you press the SET- switch at increased speed, the cruising speed will be set again.

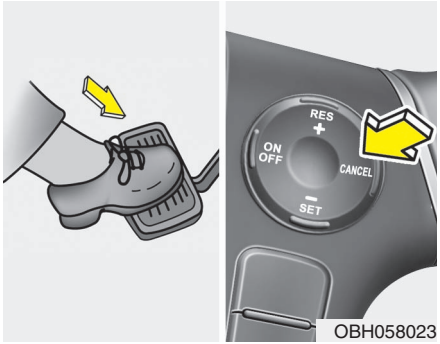

OBH058023

E090500ABH

### To cancel cruise control, do one of the following:

- Press the brake pedal.
- Shift the shift lever into N (Neutral)
- Press the CANCEL switch located on the steering wheel.
- Decrease the vehicle speed lower than the memory speed by 9 mph (15 km/h).
- Decrease the vehicle speed to less than approximately 20 mph (32 km/h).

- Press the parking brake pedal or pull the EPB switch (if equipped). Do not operate the parking brake while driving except in an emergency situation.

*Each of these actions will cancel cruise control operation (the SET indicator light in the instrument cluster will go off), but it will not turn the system off. If you wish to resume cruise control operation, push the RES+ switch located on your steering wheel. You will return to your previously preset speed.*

OBH058022

E090600ABH

### To resume cruising speed at more than approximately 25 mph (40 km/h):

If any method other than the cruise ON/OFF switch was used to cancel cruising speed and the system is still activated, the most recent set speed will automatically resume when the RES+ switch is pushed.

It will not resume, however, if the vehicle speed has dropped below approximately 25 mph (40 km/h).

### ✱ NOTICE

**Always check the road conditions when pressing the RES+ switch to resume the speed.**

OBH058020

E090700ABH

### To turn cruise control off, do one of the following:

- Push the cruise ON/OFF button (the CRUISE indicator light in the instrument cluster will go off).
- Turn the ignition off.

*Both of these actions cancel cruise control operation. If you want to resume cruise control operation, repeat the steps provided in "To set cruise control speed" on the previous page.*

## SMART CRUISE CONTROL (SCC) SYSTEM (IF EQUIPPED)

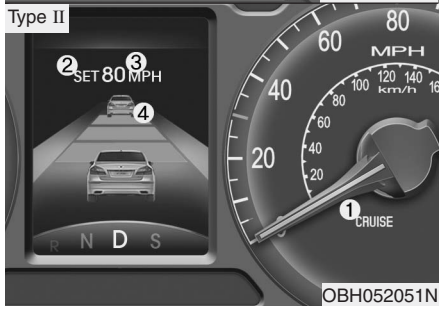


① CRUISE indicator
② SET indicator
③ Set speed
④ Vehicle-to-vehicle distance

E150000ABH

The smart cruise control system allows you to program the vehicle to maintain a set speed so long as it is not limited by traffic. When traffic is encountered the vehicle will be slowed to maintain a set distance behind traffic without depressing the accelerator or brake pedal.

### ⚠ WARNING

- **If the smart cruise control is left on, (CRUISE indicator light in the instrument cluster illuminated) the smart cruise control can be activated unintentionally. Keep the smart cruise control system off (CRUISE indicator light OFF) when the smart cruise control is not in use, to avoid inadvertently setting a speed.**
- **Use the smart cruise control system only when traveling on open highways in good weather.**
- **Do not use the smart cruise control when it may not be safe to keep the car at a constant speed, for instance, driving in heavy or varying traffic, or on slippery (rainy, icy or snow-covered) or winding roads or over 6% up-hill or down-hill roads.**

**(Continued)**

**(Continued)**

- **Pay particular attention to the driving conditions whenever using the smart cruise control system.**
- **Be careful when driving downhill using the smart cruise control system, which may increase the vehicle speed.**
- **The smart cruise control system is not a substitute for safe driving practices but a convenience function only. It is the responsibility of the driver to always check the speed and distance to the vehicle ahead.**

### ✻ NOTICE

**During normal smart cruise control operation, when the SET switch is activated or reactivated after applying the brakes, the smart cruise control will energize after approximately 3 seconds. This delay is normal.**

OBH058020

E150100ABH

## To set cruise control speed:

1. Push the cruise ON-OFF button on the steering wheel to turn the system on. The CRUISE indicator light in the instrument cluster will illuminate.
2. Accelerate to the desired speed.
   - min. 19 mph (30 km/h): when there is no vehicle in front
   - min. 6 mph (10 km/h): when there is a vehicle in front

OBH058021

3. Push the SET- switch, and release it at the desired speed. The SET indicator light, set speed and vehicle to vehicle distance on the LCD screen will illuminate. Release the accelerator pedal. The desired speed will automatically be maintained.

*If there is a vehicle in front of you, the speed may decrease to maintain the distance to the vehicle ahead.*

*On a steep grade, the vehicle may slow down or speed up slightly while going uphill or downhill.*

OBH058022

E150200ABH

## To increase cruise control set speed:

Follow either of these procedures:

- Push the RES+ switch and hold it. Your vehicle set speed will increase by 10 km/h or 5 mph. Release the switch at the speed you want.
- Push the RES+ switch and release it immediately. The cruising speed will increase by 1.0 mph (1.6 km/h) each time the RES+ switch is operated in this manner.

OBH058021

E150300ABH

### To decrease the cruising speed:

Follow either of these procedures:

- Push the SET- switch and hold it. Your vehicle set speed will decrease by 5 mph or 10 km/h. Release the switch at the speed you want.
- Push the SET- switch and release it immediately. The cruising speed will decrease by 1.0 mph (1.6 km/h) each time the SET- switch is operated in this manner.
- You can set the speed 19 mph (30 km/h).

E150400ABH

### To temporarily accelerate with the cruise control on:

If you want to speed up temporarily when the cruise control is on, depress the accelerator pedal. Increased speed will not interfere with cruise control operation or change the set speed.

To return to the set speed, take your foot off the accelerator.

If you press the SET- switch at increased speed, the cruising speed will be set again.

### ✻ NOTICE

**Be careful when accelerating temporarily, because the speed is not regulated automatically at this time even if there is a vehicle in front of you.**

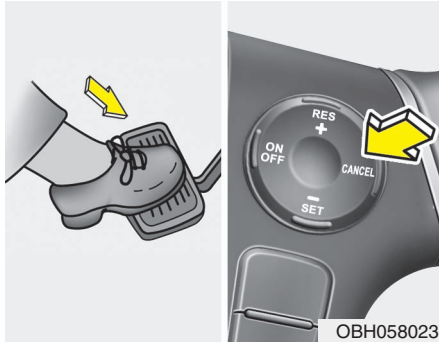

OBH058023

E150500ABH

### Cruise control will be canceled when;

- Depressing the brake pedal.
- Shifting the shift lever into N (Neutral) or R (Reverse).
- Pressing the CANCEL switch located on the steering wheel.
- Decreasing the vehicle speed to less than approximately 19 mph (30 km/h).
- Operating the parking brake pedal or the EPB switch (if equipped). Do not operate the parking brake while driving except in an emergency situation.
- The ESC or ABS is operating.
- Downshifting to the 2nd gear with sports mode.

- Decreasing the vehicle speed to less than approximately 6 mph (10 km/h) as the vehicle in front of you.
- The ESC is turned off.
- The sensor or the cover is dirty or obscured with foreign matter.

*Each of these actions will cancel smart cruise control operation (the SET indicator light, set speed and vehicle to vehicle distance on the LCD screen will go off), but it will not turn the system off. If you wish to resume smart cruise control operation, push the RES+ switch located on your steering wheel. You will return to your previously preset speed.*

**⚠ CAUTION**

***If the sensor cover is dirty or obstructed, the smart cruise control will cancel automatically.***

OBH058022

E090600ABH

### To resume cruise control set speed

If any method other than the cruise ON/OFF switch was used to cancel cruising speed and the system is still activated, the most recent set speed will automatically resume when the RES+ switch is pushed.

It will not resume, however, if the vehicle speed has dropped below approximately 6 mph (10 km/h) when the sensor detects the vehicle ahead or if the vehicle speed has dropped below approximately 19 mph (30 km/h) when there is no vehicle in front of your vehicle.

**✻ NOTICE**

**Always check the road conditions when pressing the RES+ switch to resume the speed.**

OBH058020

E150700ABH

### To turn cruise control off, do one of the following:

- Push the cruise ON/OFF button (the CRUISE indicator light in the instrument cluster will go off).
- Turn the engine off.

*Both of these actions cancel smart cruise control operation. If you want to resume smart cruise control operation, repeat the steps provided in “To set cruise control speed” on the previous page.*

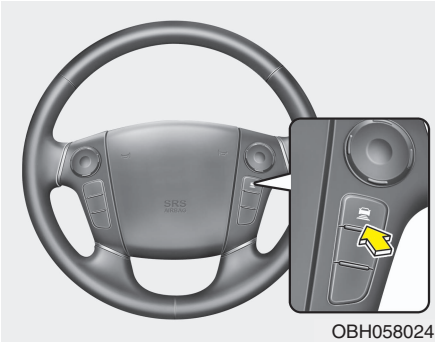


OBH058024

E150800ABH

### To set vehicle to vehicle distance:

This function allows you to program the vehicle to maintain a following distance to the vehicle ahead without depressing the accelerator pedal or brake pedal.

The vehicle to vehicle distance will automatically activate when the smart cruise control system is on.

Select the appropriate distance according to road conditions and vehicle speed.

Each time the button is pressed, the vehicle to vehicle distance changes as follows;

Distance 3 → Distance 2 → Distance 1

For example, if you drive at 50 mph (80 km/h), the distance is maintained as follows;

Distance 3 - approximately 180 feet
Distance 2 - approximately 130 feet
Distance 1 - approximately 85 feet

### ✻ NOTICE

**The 'Distance 3' is always set when the system is used for the first time after starting the engine.**

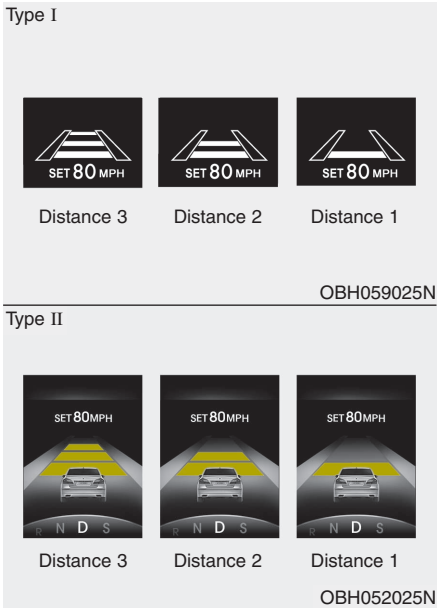


E150801ABH

***When the lane ahead is clear:***

- The vehicle speed will maintain the set speed.

E150802ABH

***When there is a vehicle ahead of you in your lane:***

- Your vehicle speed will slow down or speed up to maintain the selected distance.
- If the vehicle ahead speeds up, your vehicle will travel at a steady cruising speed after accelerating to the set speed.

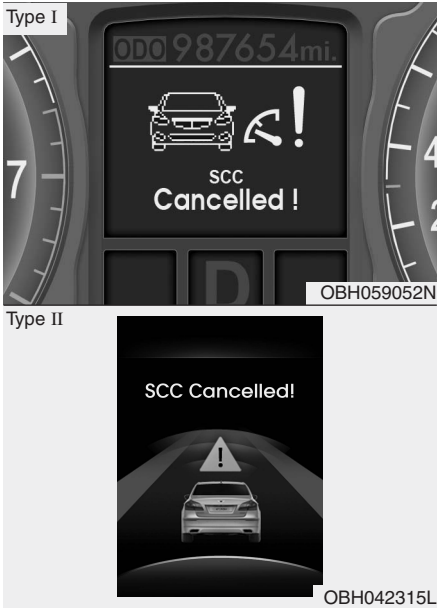


- The warning chime will sound and a message will appear when the vehicle speed decreases to less than 6 mph (10 km/h) due to a vehicle ahead, and the smart cruise control system will automatically deactivate.

- If the system is deactivated, you must actively adjust the vehicle speed, as well as the distance to the vehicle ahead by depressing the accelerator or brake pedal.
- Always check the road conditions. Do not rely on the warning chime.

**⚠ CAUTION**

- ***The warning chime sounds and malfunction indicator blinks if it is hard to maintain the selected distance to the vehicle ahead.***
- ***If the warning chime sounds, actively adjust the vehicle speed, as well as the distance to the vehicle ahead by depressing the accelerator or brake pedal.***
- ***Even if the warning chime is not activated, always pay attention to the driving conditions to prevent dangerous situations from occurring.***

E150803ABH

## Sensor to detect distance to the vehicle ahead

The sensor detects distance to the vehicle ahead.

If the sensor is covered with dirt or other foreign matter, the vehicle to vehicle distance control may not operate correctly.

Always keep the sensor clean.

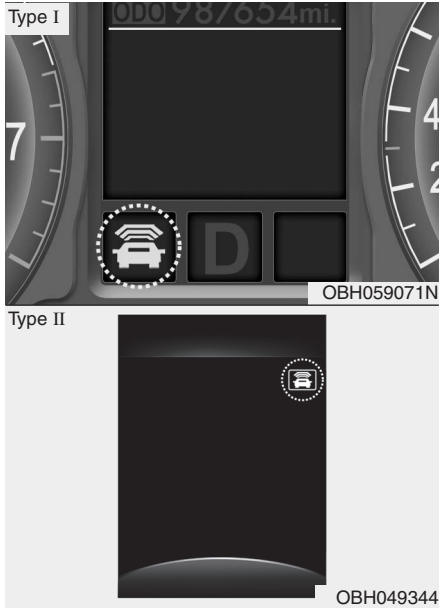


***Sensor malfunction indicator***

If the sensor or cover is dirty or obscured with foreign matter such as snow, the indicator will illuminate. Clean the sensor by using a soft cloth.

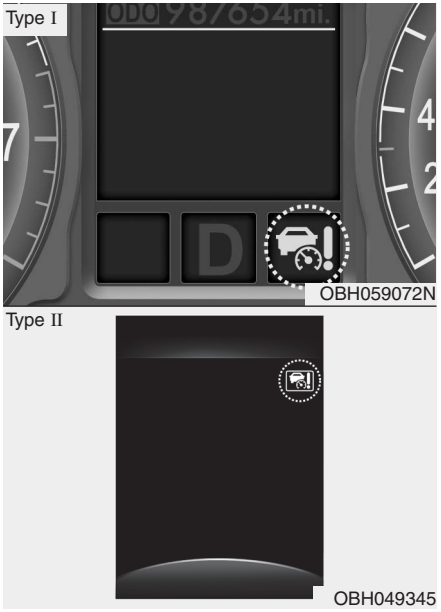


***SCC (Smart cruise control) malfunction indicator***

The warning light illuminates when the vehicle to vehicle distance control system is not functioning normally.

Take your vehicle to an authorized HYUNDAI dealer and have the system checked.

## ⚠ CAUTION

- ***Do not install accessories around the sensor and do not replace the bumper by yourself. It may interfere with the sensor performance.***
- ***Always keep the sensor and bumper clean.***
- ***To prevent sensor cover damage from occurring, wash the car with a soft cloth.***
- ***Do not damage the sensor or sensor area by a strong impact. If the sensor moves slightly off position, the smart cruise control system will not operate correctly.***

  ***If this occurs, have your vehicle checked by an authorized HYUNDAI dealer as soon as possible.***
- ***Use only a genuine HYUNDAI sensor cover for your vehicle.***

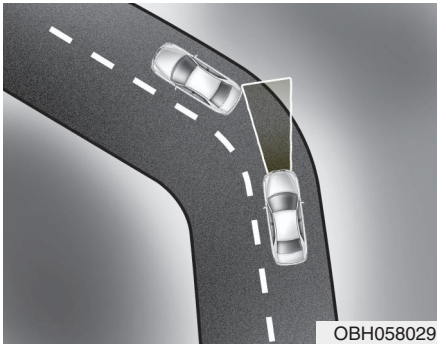


E150900ABH

### Limitations of the system

The smart cruise control system may have limits to its ability to detect distance to the vehicle ahead due to road and traffic conditions.

***On curves***

- On curves, the smart cruise control system may not detect a moving vehicle in your lane, and then your vehicle could accelerate to the set speed. Also, the vehicle speed will slow down when the vehicle ahead is recognized suddenly.
- Select the appropriate set speed on curves and apply the brakes or accelerator pedal if necessary.

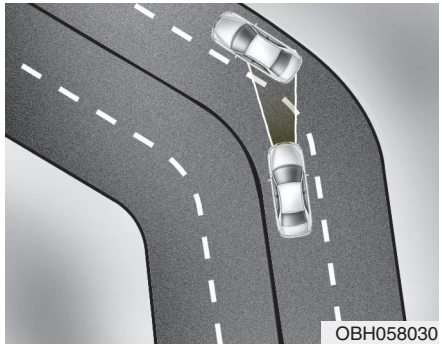


- Your vehicle speed can be reduced due to a vehicle in the adjacent lane. Apply the accelerator pedal and select the appropriate set speed. Check to be sure that the road conditions permit safe operation of the smart cruise control.

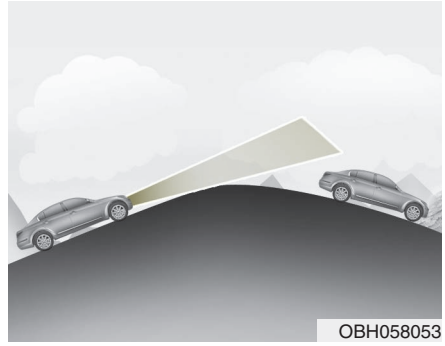


E150902ABH

***On inclines***

- During uphill or downhill driving, the smart cruise control system may not detect a moving vehicle in your lane, and cause your vehicle to accelerate to the set speed. Also, the vehicle speed will slow down when the vehicle ahead is recognized suddenly.
- Select the appropriate set speed on inclines and apply the brakes or accelerator pedal if necessary.

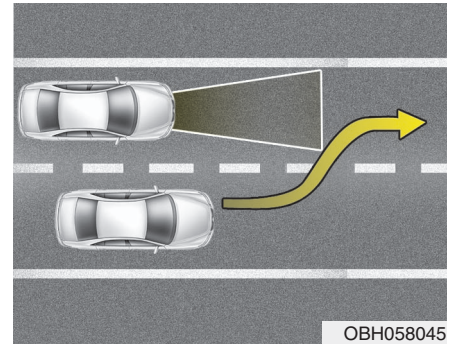


E150903ABH

***Lane changing***

- A vehicle which moves into your lane from an adjacent lane cannot be recognized by the sensor until it is in the sensor's detection range.
- The sensor may not detect immediately when a vehicle cuts in suddenly. Always pay attention to the traffic, road and driving conditions.
- If a vehicle which moves into your lane is slower than your vehicle, your speed may decrease to maintain the distance to the vehicle ahead.
- If a vehicle which moves into your lane is faster than your vehicle, your vehicle will accelerate to the selected speed.

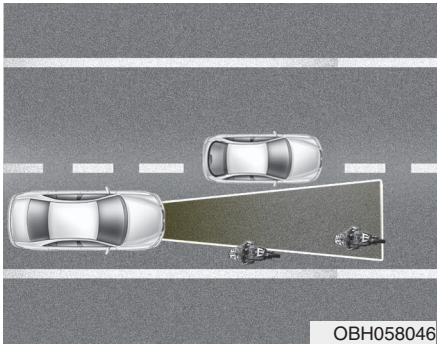


E150904ABH

### *Vehicle recognition*

Some vehicles ahead in your lane cannot be recognized by the sensor as follows:

- Narrow vehicles such as motorcycles or bicycles
- Vehicles offset to one side
- Slow-moving vehicles or sudden-decelerating vehicles
- Stopped vehicles
- Vehicles with small rear profile such as trailers with no loads

A vehicle ahead cannot be recognized correctly by the sensor if any of following occurs:

- When the vehicle is pointing upwards due to overloading in the trunk
- When operating the steering wheel
- When driving to one side of the lane
- When driving on narrow lanes or on curves

Apply the brakes or accelerator pedal if necessary.

**⚠ WARNING**

- **The vehicle cannot be stopped by using the smart cruise control system.**
  **If an emergency stop is necessary, you must apply the brakes.**
- **Keep a safe distance according to road conditions and vehicle speed. If the vehicle to vehicle distance is too close during a high-speed driving, it may cause a serious collision.**
- **The smart cruise control system can not recognize a stopped vehicle, pedestrians or an oncoming vehicle. Always look ahead cautiously to prevent unexpected and sudden situations from occurring.**
- **In front of you, vehicles moving with a frequent lane change may cause a delay in the system's reaction or may cause the system to react to a vehicle actually in an adjacent lane. Always look ahead cautiously to prevent unexpected and sudden situations from occurring.**

**(Continued)**

**(Continued)**

- **The smart cruise control system is not a substitute for safe driving practices but a convenience function only. It is the responsibility of the driver to always check the speed and the distance to the vehicle ahead.**
- **Always be aware of the selected speed and vehicle to vehicle distance.**
- **Always maintain sufficient braking distance and decelerate your vehicle by applying the brakes if necessary.**
- **As the smart cruise control system may not recognize complex driving situations, always pay attention to driving conditions and control your vehicle speed.**
- **For safe operation, carefully read and follow the instructions in this manual before use.**

⚠ **CAUTION**

***The smart cruise control system may not operate temporarily due to electrical interference.***

## LANE DEPARTURE WARNING SYSTEM (LDWS) (IF EQUIPPED)

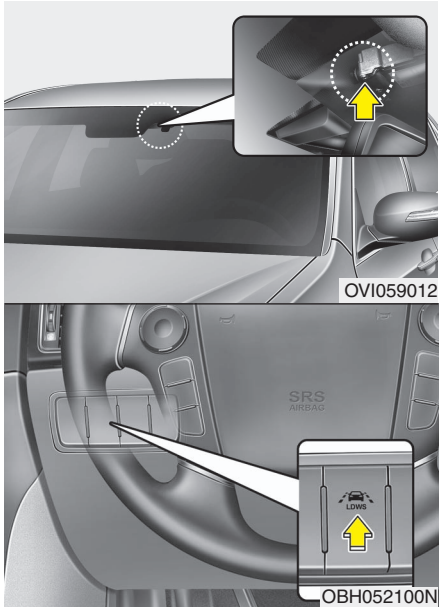


This system detects the lane with the sensor at the front windshield and warns you when your vehicle leaves the lane.

**⚠ WARNING**

- **The LDWS does not make the vehicle change lanes. It is the driver's responsibility to always check the road conditions.**
- **Do not turn the steering wheel suddenly, when the LDWS warns you that your vehicle is leaving the lane.**
- **If the sensor cannot detect the lane or if the vehicle speed does not exceed 43 mph (70 km/h), the LDWS won't warn you even though the vehicle leaves the lane.**
- **If your vehicle has window tint or other types of coating on the front windshield, the LDWS may not work properly.**
- **Do not let water or any kind of liquid come in contact with the LDWS sensor.**
- **Do not remove LDWS parts and do not damage the sensor by a strong impact.**
- **Do not put objects that reflect light on the dash board.**
- **Always check the road conditions because you may not hear the LDWS warning chime due to audio volume or external noise.**

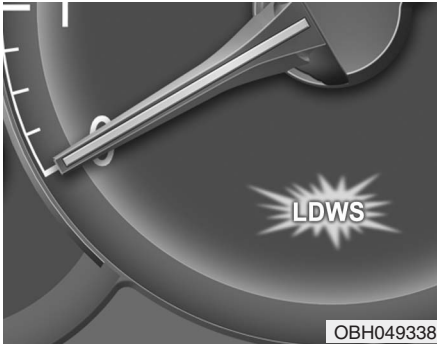


To operate the LDWS, press the switch with the ignition in the ON position. The indicator illuminates on the cluster. To cancel the LDWS, press the switch again.

• When the sensor detects the lane line

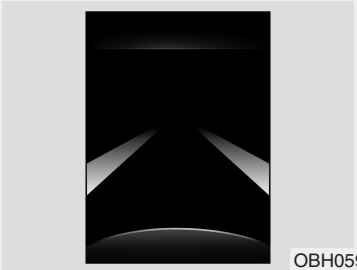

OBH059304

• When the sensor doesn't detect the lane line

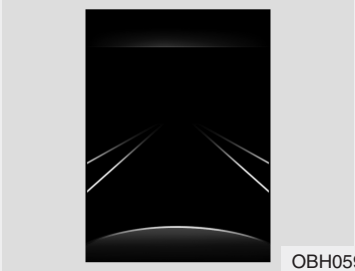

OBH059302

If your vehicle leaves the lane when the LDWS is operating and vehicle speed exceeds 43 mph (70 km/h), the warning operates as follows:

OBH059301

1. Visual warning

If you leave the lane, the lane you leave on the LCD display blinks yellow with an 0.8 second interval.

2. Auditory warning

If you leave the lane, the warning sound operates with an 0.8 second interval.

OBH049337L

## Warning indicator

If the LDWS FAIL warning indicator comes on, the LDWS is not working properly. Take your vehicle to an authorized HYUNDAI dealer and have the system checked.

**The LDWS does not operate when:**

- The driver turns on the turn signal to change lane.
  However, when the hazard warning flasher is operating, the LDWS operates normally.
- Operating the wiper switch with HI mode due to heavy rain.
- Driving on the lane line.

### ✻ NOTICE

**To change lane, operate the turn signal switch then change the lane.**

**The LDWS may not warn you even if the vehicle leaves the lane, or may warn you even if the vehicle does not leave the lane when:**

- The lane can't be visible due to snow, rain, stain, a puddle or many other things.
- The brightness outside changes suddenly.
- Not turning on the headlights at night or in a tunnel.
- Difficult to distinguish the color of the lane marking from the road.
- Driving on a steep grade or a curve.
- Light reflects from the water on the road.
- The lens or windshield is stained with foreign matter.
- The sensor cannot detect the lane because of fog, heavy rain or heavy snow.
- The surrounding of the inside rear view mirror temperature is high due to a direct sun light.
- The lane is very wide or narrow.
- The lane line is damaged or indistinct.
- A shadow is on the lane line by a median strip.
- There is a mark that looks like lane line.
- There is a boundary structure.
- The distance from vehicle ahead is very short or the vehicle ahead drives hiding the lane line.
- The vehicle shakes heavily.
- The lane number increases or decreases or the lane lines are crossing.
- Putting something on the dashboard.
- Driving with the sun in front of you.
- Driving in areas under construction.
- The lane line is more than two.

## ECONOMICAL OPERATION

E100000AEN

Your vehicle's fuel economy depends mainly on your style of driving, where you drive and when you drive.

Each of these factors affects how many miles (kilometers) you can get from a gallon (liter) of fuel. To operate your vehicle as economically as possible, use the following driving suggestions to help save money in both fuel and repairs:

- Drive smoothly. Accelerate at a moderate rate. Don't make "jack-rabbit" starts or full-throttle shifts and maintain a steady cruising speed. Don't race between stoplights. Try to adjust your speed to that of the other traffic so you don't have to change speeds unnecessarily. Avoid heavy traffic whenever possible. Always maintain a safe distance from other vehicles so you can avoid unnecessary braking. This also reduces brake wear.
- Drive at a moderate speed. The faster you drive the more fuel your vehicle uses. Driving at a moderate speed, in the highest gear appropriate for the conditions, especially on the highway, is one of the most effective ways to reduce fuel consumption.
- Don't "ride" the brake pedal. This can increase fuel consumption and also increase wear on these components. In addition, driving with your foot resting on the brake pedal may cause the brakes to overheat, which reduces their effectiveness and may lead to more serious consequences.
- Take care of your tires. Keep them inflated to the recommended pressure. Incorrect inflation, either too much or too little, results in unnecessary tire wear. Check the tire pressures at least once a month.
- Be sure that the wheels are aligned correctly. Improper alignment can result from hitting curbs or driving too fast over irregular surfaces. Poor alignment causes faster tire wear and may also result in other problems as well as greater fuel consumption.
- Keep your car in good condition. For better fuel economy and reduced maintenance costs, maintain your car in accordance with the maintenance schedule in section 7. If you drive your car in severe conditions, more frequent maintenance is required (see section 7 for details).
- Keep your car clean. For maximum service, your vehicle should be kept clean and free of corrosive materials. It is especially important that mud, dirt, ice, etc. not be allowed to accumulate on the underside of the car. This extra weight can result in increased fuel consumption and also contribute to corrosion.
- Travel lightly. Don't carry unnecessary weight in your car. Weight reduces fuel economy.
- Don't let the engine idle longer than necessary. If you are waiting (and not in traffic), turn off your engine and restart only when you're ready to go.

- Remember, your vehicle does not require extended warm-up. After the engine has started, allow the engine to run for 10 to 20 seconds prior to placing the vehicle in gear. In very cold weather, however, give your engine a slightly longer warm-up period.
- Don't "lug" or "over-rev" the engine. Lugging is driving too slowly in too high a gear resulting in the engine bucking. If this happens, shift to a lower gear. Over-revving is racing the engine beyond its safe limit. This can be avoided by shifting at the recommended speeds.
- Use your air conditioning sparingly. The air conditioning system is operated by engine power so your fuel economy is reduced when you use it.
- Open windows at high speeds can reduce fuel economy.
- Fuel economy is less in crosswinds and headwinds. To help offset some of this loss, slow down when driving in these conditions.

Keeping a vehicle in good operating condition is important both for economy and safety. Therefore, have an authorized HYUNDAI dealer perform scheduled inspections and maintenance.

**⚠ WARNING - Engine off during motion**

**Never turn the engine off to coast down hills or anytime the vehicle is in motion. The power steering and power brakes will not function properly without the engine running. Instead, keep the engine on and downshift to an appropriate gear for engine braking effect. In addition, turning off the ignition while driving could engage the steering wheel lock resulting in loss of vehicle steering which could cause serious injury or death.**

## SPECIAL DRIVING CONDITIONS

E110100ABH

### Hazardous driving conditions

When hazardous driving conditions are encountered such as water, snow, ice, mud, sand, or similar hazards, follow these suggestions:

- Drive cautiously and allow extra distance for braking.
- Avoid sudden movements in braking or steering.

**⚠ WARNING - ABS**

**Do not pump the brake pedal on a vehicle equipped with ABS.**

- If stalled in snow, mud, or sand, use second gear. Accelerate slowly to avoid spinning the drive wheels.
- Use sand, rock salt, tire chains, or other non-slip material under the drive wheels to provide traction when stalled in ice, snow, or mud.
- Leave ESC system on for best traction when attempting to get vehicle unstuck.

**⚠ WARNING - Downshifting**

**Downshifting with an automatic transmission, while driving on slippery surfaces can cause an accident. The sudden change in tire speed could cause the tires to skid. Be careful when downshifting on slippery surfaces.**

E110200ABH-EU

### Rocking the vehicle

If it is necessary to rock the vehicle to free it from snow, sand, or mud, first turn the steering wheel right and left to clear the area around your front wheels. Then, shift back and forth between R (Reverse) and any forward gear in vehicles equipped with an automatic transmission. Do not race the engine, and spin the wheels as little as possible. If you are still stuck after a few tries, have the vehicle pulled out by a tow vehicle to avoid engine overheating and possible damage to the transmission.

**⚠ CAUTION**

***Prolonged rocking may cause engine over-heating, transmission damage or failure, and tire damage.***

**⚠ WARNING - Spinning tires**

**Do not spin the wheels, especially at speeds more than 35 mph (56 km/h). Spinning the wheels at high speeds when the vehicle is stationary could cause a tire to overheat which could result in tire damage that may injure bystanders.**

**✻ NOTICE**

**The ESC system should be turned OFF prior to rocking the vehicle.**

**⚠ WARNING**

**If your vehicle becomes stuck in snow, mud, sand, etc., then you may attempt to rock the vehicle free by moving it forward and backward. Do not attempt this procedure if people or objects are anywhere near the vehicle. During the rocking operation the vehicle may suddenly move forward or backward as it becomes unstuck, causing injury or damage to nearby people or objects.**

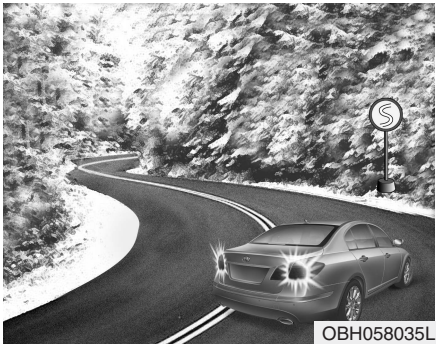


E110300AUN

## Smooth cornering

Avoid braking or gear changing in corners, especially when roads are wet. Finish braking before entering a turn while the vehicle is still travelling in a straight line. Ideally, corners should always be taken under gentle acceleration. If you follow these suggestions, tire wear will be held to a minimum.

E110400ABH-EU

## Driving at night

Because night driving presents more hazards than driving in the daylight, here are some important tips to remember:

- Slow down and keep more distance between you and other vehicles, as it may be more difficult to see at night, especially in areas where there may not be any street lights.

- Adjust your mirrors to reduce the glare from other driver's headlights.
- Keep your headlights clean and properly aimed. Dirty or improperly aimed headlights will make it much more difficult to see at night. Headlight operation when using windshield wipers is mandatory in some states.
- Avoid staring directly at the headlights of oncoming vehicles. You could be temporarily blinded, and it will take several seconds for your eyes to readjust to the darkness.

E110500AUN

## Driving in the rain

Rain and wet roads can make driving dangerous, especially if you're not prepared for the slick pavement. Here are a few things to consider when driving in the rain:

- A heavy rainfall will make it harder to see and will increase the distance needed to stop your vehicle, so slow down.
- Keep your windshield wiping equipment in good shape. Replace your windshield wiper blades when they show signs of streaking or missing areas on the windshield.
- If your tires are not in good condition, making a quick stop on wet pavement can cause a skid and possibly lead to an accident. Be sure your tires are in good shape.
- Turn on your headlights to make it easier for others to see you.
- Driving too fast through large puddles can affect your brakes. If you must go through puddles, try to drive through them slowly.
- If you believe you may have gotten your brakes wet, apply them lightly while driving until normal braking operation returns.

E110600AUN

## Driving in flooded areas

Avoid driving through flooded areas unless you are sure the water is no higher than the bottom of the wheel hub. Drive through any water slowly. Allow adequate stopping distance because brake performance may be affected.

After driving through water, dry the brakes by gently applying them several times while the vehicle is moving slowly.

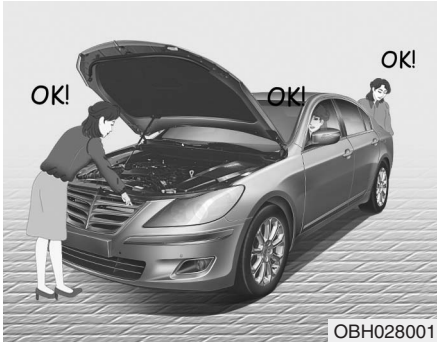


E110700ABH

## Highway driving

### *Tires*

Adjust the tire inflation pressures to specification. Low tire inflation pressures will result in overheating and possible failure of the tires.

Avoid using worn or damaged tires which may result in reduced traction or tire failure.

### ✱ NOTICE

**Never exceed the maximum tire inflation pressure shown on the tires.**

### ⚠ WARNING

- **Underinflated or overinflated tires can cause poor handling, loss of vehicle control, and sudden tire failure leading to accidents, injuries, and even death. Always check tires for proper inflation before driving. For proper tire pressures, refer to "Tires and wheels" in section 8.**
- **Driving on tires with no or insufficient tread is dangerous. Worn-out tires can result in loss of vehicle control, collisions, injury, and even death. Worn-out tires should be replaced as soon as possible and should never be used for driving. Always check the tire tread before driving your car. For further information and tread limits, refer to "Tires and wheels" in section 7.**

### *Fuel, engine coolant and engine oil*

High speed travel consumes more fuel than urban motoring. Do not forget to check both engine coolant and engine oil.

### *Drive belt*

A loose or damaged drive belt may result in overheating of the engine.

## WINTER DRIVING

E120000ABH

More severe weather conditions of winter result in greater wear and other problems. To minimize winter driving problem, you should follow these suggestions:

E120100AUN

### Snowy or icy conditions

To drive your vehicle in deep snow, it may be necessary to use snow tires or to install tire chains on your tires. If snow tires are needed, it is necessary to select tires equivalent in size and type of the original equipment tires. Failure to do so may adversely affect the safety and handling of your car. Furthermore, speeding, rapid acceleration, sudden brake applications, and sharp turns are potentially very hazardous practices.

During deceleration, use engine braking to the fullest extent. Sudden brake applications on snowy or icy roads may cause skids to occur. You need to keep sufficient distance between the vehicle in operation in front and your vehicle. Also, apply the brake gently. It should be noted that installing tire chains on the tire will provide a greater driving force, but will not prevent side skids.

**✻ NOTICE**

**Tire chains are not legal in all states. Check state laws before fitting tire chains.**

E120101AUN

#### *Snow tires*

If you mount snow tires on your vehicle, make sure they are radial tires of the same size and load range as the original tires. Mount snow tires on all four wheels to balance your vehicle's handling in all weather conditions. Keep in mind that the traction provided by snow tires on dry roads may not be as high as your vehicle's original equipment tires. You should drive cautiously even when the roads are clear. Check with the tire dealer for maximum speed recommendations.

**⚠ WARNING - Snow tire size**

**Snow tires should be equivalent in size and type to the vehicle's standard tires. Otherwise, the safety and handling of your vehicle may be adversely affected.**

*Do not install studded tires without first checking local, state and municipal regulations for possible restrictions against their use.*

E120102ABH

### *Tire chains*

Since the sidewalls of radial tires are thinner, they can be damaged by mounting some types of snow chains on them. Therefore, the use of snow tires is recommended instead of snow chains. Do not mount tire chains on vehicles equipped with aluminum wheels; snow chains may cause damage to the wheels. If snow chains must be used, use wire-type chains with a thickness of less than 0.47 in (12 mm). Damage to your vehicle caused by improper snow chain use is not covered by your vehicle manufacturers warranty.

Install tire chains only on the rear tires.

**⚠ CAUTION**

- ***Make sure the snow chains are the correct size and type for your tires. Incorrect snow chains can cause damage to the vehicle body and suspension and may not be covered by your vehicle manufacturer warranty. Also, the snow chain connecting hooks may be damaged from contacting vehicle components causing the snow chains to come loose from the tire. Make sure the snow chains are SAE class "S" certified.***
- ***Always check chain installation for proper mounting after driving approximately 0.3 to 0.6 miles (0.5 to 1 km) to ensure safe mounting. Retighten or remount the chains if they are loose.***

**Chain installation**

When installing chains, follow the manufacturer's instructions and mount them as tightly as you can. Drive slowly with chains installed. If you hear the chains contacting the body or chassis, stop and tighten them. If they still make contact, slow down until it stops. Remove the chains as soon as you begin driving on cleared roads.

**⚠ WARNING**
**- Mounting chains**

**When mounting snow chains, park the vehicle on level ground away from traffic. Turn on the vehicle Hazard Warning flashers and place a triangular emergency warning device behind the vehicle if available. Always place the vehicle in P (Park), apply the parking brake and turn off the engine before installing snow chains.**

**⚠ WARNING - Tire chains**

- **The use of chains may adversely affect vehicle handling.**
- **Do not exceed 20 mph (30 km/h) or the chain manufacturer's recommended speed limit, whichever is lower.**
- **Drive carefully and avoid bumps, holes, sharp turns, and other road hazards, which may cause the vehicle to bounce.**
- **Avoid sharp turns or locked-wheel braking.**

**⚠ CAUTION**

- ***Chains that are the wrong size or improperly installed can damage your vehicle's brake lines, suspension, body and wheels.***
- ***Stop driving and retighten the chains any time you hear them hitting the vehicle.***

E120200AUN

### Use high quality ethylene glycol coolant

Your vehicle is delivered with high quality ethylene glycol coolant in the cooling system. It is the only type of coolant that should be used because it helps prevent corrosion in the cooling system, lubricates the water pump and prevents freezing. Be sure to replace or replenish your coolant in accordance with the maintenance schedule in section 7. Before winter, have your coolant tested to assure that its freezing point is sufficient for the temperatures anticipated during the winter.

E120300AEN

### Check battery and cables

Winter puts additional burdens on the battery system. Visually inspect the battery and cables as described in section 7. The level of charge in your battery can be checked by an authorized HYUNDAI dealer or a service station.

E120400ABH

### Change to "winter weight" oil if necessary

In some climates it is recommended that a lower viscosity "winter weight" oil be used during cold weather. See section 8 for recommendations. If you aren't sure what weight oil you should use, consult an authorized HYUNDAI dealer.

E120500AUN

### Check spark plugs and ignition system

Inspect your spark plugs as described in section 7 and replace them if necessary. Also check all ignition wiring and components to be sure they are not cracked, worn or damaged in any way.

E120600AUN

## To keep locks from freezing

To keep the locks from freezing, squirt an approved de-icer fluid or glycerine into the key opening. If a lock is covered with ice, squirt it with an approved de-icing fluid to remove the ice. If the lock is frozen internally, you may be able to thaw it out by using a heated key. Handle the heated key with care to avoid injury.

E120700AEN

## Use approved window washer anti-freeze in system

To keep the water in the window washer system from freezing, add an approved window washer anti-freeze solution in accordance with instructions on the container. Window washer anti-freeze is available from an authorized HYUNDAI dealer and most auto parts outlets. Do not use engine coolant or other types of anti-freeze as these may damage the paint finish.

E120800ABH

## Do not let your parking brake freeze

Under some conditions your parking brake can freeze in the engaged position. This is most likely to happen when there is an accumulation of snow or ice around or near the rear brakes or if the brakes are wet. If there is a risk the parking brake may freeze, apply it only temporarily while you put the gear selector lever in P and block the rear wheels so the car cannot roll. Then release the parking brake.

E120900AUN

## Do not let ice and snow accumulate underneath

Under some conditions, snow and ice can build up under the fenders and interfere with the steering. When driving in severe winter conditions where this may happen, you should periodically check underneath the car to be sure the movement of the front wheels and the steering components is not obstructed.

E121000AUN

## Carry emergency equipment

Depending on the severity of the weather where you drive your car, you should carry appropriate emergency equipment. Some of the items you may want to carry include tire chains, tow straps or chains, flashlight, emergency flares, sand, a shovel, jumper cables, a window scraper, gloves, ground cloth, coveralls, a blanket, etc.

## VEHICLE LOAD LIMIT

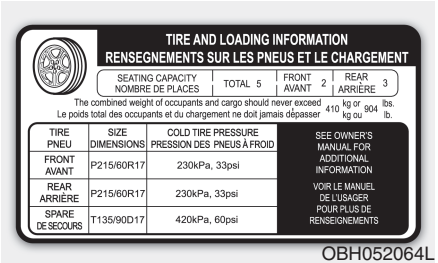


OBH052064L

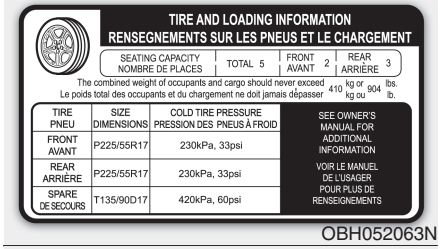


OBH052063N

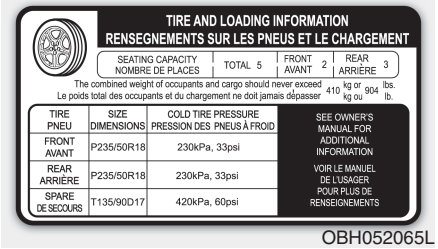


OBH052065L

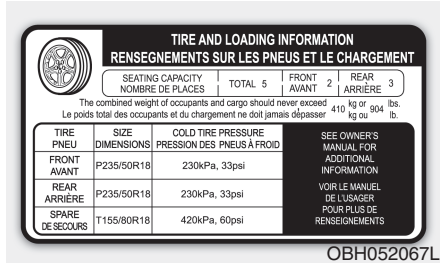


OBH052067L

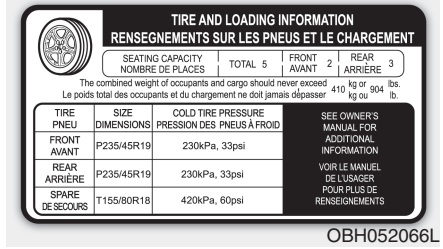


OBH052066L

E150100AUN

### Tire and loading information label

The label located on the driver's door sill gives the original tire size, cold tire pressures recommended for your vehicle, the number of people that can be in your vehicle and vehicle capacity weight.

E150101ABH

***Vehicle capacity weight:***

904 lbs. (410 kg)

Vehicle capacity weight is the maximum combined weight of occupants and cargo.

E150102ABH

***Seating capacity:***

Total : 5 persons
(Front seat : 2 persons,
Rear seat : 3 persons)

Seating capacity is the maximum number of occupants including a driver, your vehicle may carry. However, the seating capacity may be reduced based upon the weight of all of the occupants, and the weight of the cargo being carried.

Do not overload the vehicle as there is a limit to the total weight, or load limit including occupants and cargo, the vehicle can carry.

***Towing capacity:***

We do not recommend using this vehicle for trailer towing.

***Cargo capacity:***

The cargo capacity of your vehicle will increase or decrease depending on the weight and the number of occupants.

R1-090003

***Steps For Determining Correct Load Limit -***

1. Locate the statement "The combined weight of occupants and cargo should never exceed XXX kg or XXX lbs." on your vehicle's placard.
2. Determine the combined weight of the driver and passengers that will be riding in your vehicle.
3. Subtract the combined weight of the driver and passengers from XXX kg or XXX lbs.
4. The resulting figure equals the available amount of cargo and luggage load capacity. For example, if the "XXX" amount equals 1400 lbs. and there will be five 150 lb passengers in your vehicle, the amount of available cargo and luggage load capacity is 650 lbs.

   (1400-750 (5 x 150) = 650 lbs.)
5. Determine the combined weight of luggage and cargo being loaded on the vehicle. That weight may not safely exceed the available cargo and luggage load capacity calculated in Step 4.
6. If your vehicle will be towing a trailer, load from your trailer will be transferred to your vehicle. Consult this manual to determine how this reduces the available cargo and luggage load capacity of your vehicle.

**✻ NOTICE**

**We do not recommend using this vehicle for trailer towing.**

**Example 1**

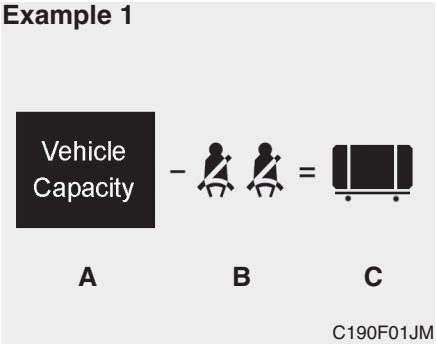


| Item | Description | Total |
|---|---|---|
| A | Vehicle Capacity Weight | 1400 lbs (635 kg) |
| B | Subtract Occupant Weight 150 lbs (68 kg) × 2 | 300 lbs (136 kg) |
| C | Available Cargo and Luggage weight | 1100 lbs (499 kg) |

**Example 2**

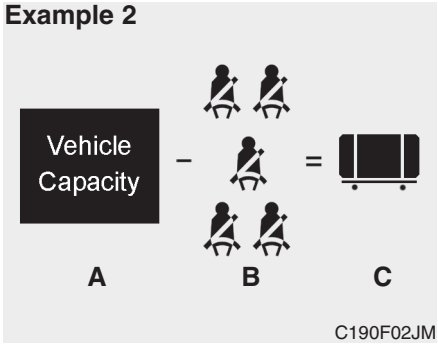


| Item | Description | Total |
|---|---|---|
| A | Vehicle Capacity Weight | 1400 lbs (635 kg) |
| B | Subtract Occupant Weight 150 lbs (68 kg) × 5 | 750 lbs (340 kg) |
| C | Available Cargo and Luggage weight | 650 lbs (295 kg) |

**Example 3**

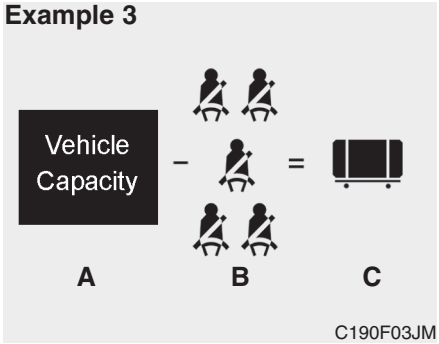


| Item | Description | Total |
|---|---|---|
| A | Vehicle Capacity Weight | 1400 lbs (635 kg) |
| B | Subtract Occupant Weight 172 lbs (78 kg) × 5 | 860 lbs (390 kg) |
| C | Available Cargo and Luggage weight | 540 lbs (245 kg) |

Refer to your vehicle’s tire and loading information label for specific information about your vehicle's capacity weight and seating positions. The combined weight of the driver, passengers and cargo should never exceed your vehicle's capacity weight.

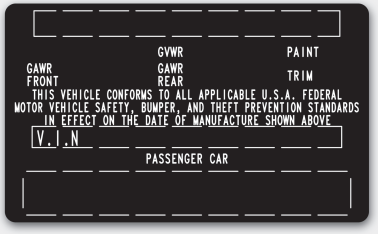


OBH059070

E150200ABH

## Certification label

The certification label is located on the driver's door sill at the center pillar.

This label shows the maximum allowable weight of the fully loaded vehicle. This is called the GVWR (Gross Vehicle Weight Rating). The GVWR includes the weight of the vehicle, all occupants, fuel and cargo.

This label also tells you the maximum weight that can be supported by the front and rear axles, called Gross Axle Weight Rating (GAWR).

To find out the actual loads on your front and rear axles, you need to go to a weigh station and weigh your vehicle. Your dealer can help you with this. Be sure to spread out your load equally on both sides of the centerline.

**⚠ WARNING - Over loading**

- **Never exceed the GVWR for your vehicle, the GAWR for either the front or rear axle and vehicle capacity weight. Exceeding these ratings can cause an accident or vehicle damage. You can calculate the weight of your load by weighing the items (or people) before putting them in the vehicle. Be careful not to overload your vehicle.**

**(Continued)**

**(Continued)**

- **Do not load your vehicle any heavier than the GVWR, either the maximum front or rear GAWR and vehicle capacity weight. If you do, parts, including tires on your vehicle can break, and it can change the way your vehicle handles and braking ability. This could cause you to lose control and crash. Also, overloading can shorten the life of your vehicle.**

The label will help you decide how much cargo and installed equipment your vehicle can carry.

If you carry items inside your vehicle - like suitcases, tools, packages, or anything else - they are moving as fast as the vehicle. If you have to stop or turn quickly, or if there is a crash, the items will keep going and can cause an injury if they strike the driver or a passenger.

**⚠ WARNING**

- **Overloading your vehicle can cause heat buildup in your vehicle's tires and possible tire failure that could lead to a crash.**
- **Overloading your vehicle can cause increased stopping distances that could lead to a crash.**
- **A crash resulting from poor handling, vehicle damage, tire failure, or increased stopping distances could result in serious injury or death.**

**⚠ CAUTION**

- ***Overloading your vehicle may cause damage. Repairs would not be covered by your warranty. Do not overload your vehicle.***
- ***Using heavier suspension components to get added durability might not change your weight ratings. Ask your dealer to help you load your vehicle the right way.***

**⚠ WARNING - Loose cargo**

**Items you carry inside your vehicle can strike and injure occupants in a sudden stop or turn, or in a crash.**

- **Put items in the cargo area of your vehicle. Try to spread the weight evenly.**
- **Never stack items, like suitcases, inside the vehicle above the tops of the seats.**
- **Do not leave an unsecured child restraint in your vehicle.**
- **When you carry something inside the vehicle, secure it.**

## VEHICLE WEIGHT

E160000ABH

This section will guide you in the proper loading of your vehicle, to keep your loaded vehicle weight within its design rating capability. Properly loading your vehicle will provide maximum return of the vehicle design performance. Before loading your vehicle, familiarize yourself with the following terms for determining your vehicle's weight ratings, from the vehicle's specifications and the certification label:

E160100AUN

**Base curb weight**

This is the weight of the vehicle including a full tank of fuel and all standard equipment. It does not include passengers, cargo, or optional equipment.

E160200AUN

**Vehicle curb weight**

This is the weight of your new vehicle when you picked it up from your dealer plus any aftermarket equipment.

E160300AUN

**Cargo weight**

This figure includes all weight added to the Base Curb Weight, including cargo and optional equipment.

E160400AUN

**GAW (Gross axle weight)**

This is the total weight placed on each axle (front and rear) - including vehicle curb weight and all payload.

E160500AUN

**GAWR (Gross axle weight rating)**

This is the maximum allowable weight that can be carried by a single axle (front or rear). These numbers are shown on the certification label.
The total load on each axle must never exceed its GAWR.

E160600AUN

**GVW (Gross vehicle weight)**

This is the Base Curb Weight plus actual Cargo Weight plus passengers.

E160700AUN-EU

**GVWR (Gross vehicle weight rating)**

This is the maximum allowable weight of the fully loaded vehicle (including all options, equipment, passengers and cargo). The GVWR is shown on the certification label located on the driver's door sill.

## TRAILER TOWING

E140000ABH

**We do not recommend using this vehicle for trailer towing.**

Road warning / 6-2
In case of an emergency while driving / 6-2
If the engine will not start / 6-3
Emergency starting / 6-4
If the engine overheats / 6-6
Tire pressure monitoring system (TPMS) / 6-7
If you have a flat tire / 6-13
Towing / 6-21

# What to do in an emergency

6

## ROAD WARNING

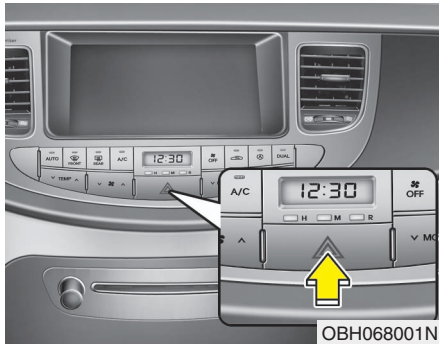


F010100AUN

### Hazard warning flasher

The hazard warning flasher serves as a warning to other drivers to exercise extreme caution when approaching, overtaking, or passing your vehicle.

It should be used whenever emergency repairs are being made or when the vehicle is stopped near the edge of a roadway.

Depress the flasher switch with the ignition switch in any position. The flasher switch is located in the center console switch panel. All turn signal lights will flash simultaneously.

- The hazard warning flasher operates whether your vehicle is running or not.
- The turn signals do not work when the hazard flasher is on.
- Care must be taken when using the hazard warning flasher while the vehicle is being towed.

## IN CASE OF AN EMERGENCY WHILE DRIVING

### If the engine stalls at a crossroad or crossing

If the engine stalls at a crossroad or crossing, set the shift lever in the N (Neutral) position and then push the vehicle to a safe place.

F020200ABH

### If you have a flat tire while driving

If a tire goes flat while you are driving:

1. Take your foot off the accelerator pedal and let the car slow down while driving straight ahead. Do not apply the brakes immediately or attempt to pull off the road as this may cause a loss of control. When the car has slowed to such a speed that it is safe to do so, brake carefully and pull off the road. Drive off the road as far as possible and park on firm, level ground. If you are on a divided highway, do not park in the median area between the two traffic lanes.

2. When the car is stopped, turn on your emergency hazard flashers, set the parking brake and put the shift lever in P.
3. Have all passengers get out of the car. Be sure they all get out on the side of the car that is away from traffic.
4. When changing a flat tire, follow the instruction provided later in this section.

F020300AEN

### If engine stalls while driving

1. Reduce your speed gradually, keeping a straight line. Move cautiously off the road to a safe place.
2. Turn on your emergency flashers.
3. Try to start the engine again. If your vehicle will not start, contact an authorized HYUNDAI dealer or seek other qualified assistance.

## IF THE ENGINE WILL NOT START

F030100BBH

### If engine doesn't turn over or turns over slowly

1. Be sure the shift lever is in N (Neutral) or P (Park) and the emergency brake is set.
2. Check the battery connections to be sure they are clean and tight.
3. Turn on the interior light. If the light dims or goes out when you operate the starter, the battery is discharged.
4. Check the starter connections to be sure they are securely tightened.
5. Do not push or pull the vehicle to start it. See instructions for "Jump starting".

**⚠ WARNING**

**If the engine will not start, do not push or pull the car to start it. This could result in a collision or cause other damage.**

F030200ABH

### If engine turns over normally but does not start

1. Check fuel level.
2. With the ignition switch in the LOCK position, check all connectors at ignition coils and spark plugs. Reconnect any that may be disconnected or loose.
3. If the engine still does not start, call an authorized HYUNDAI dealer or seek other qualified assistance.

## EMERGENCY STARTING

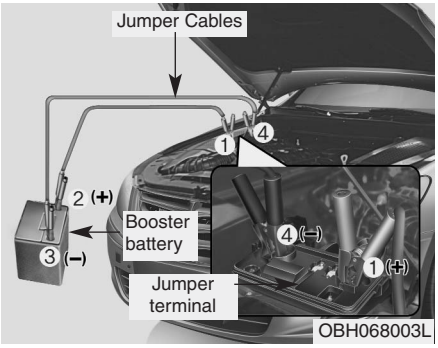


F040000ABH

Connect cables in numerical order and disconnect in reverse order.

### ✻ NOTICE

**Your vehicle has a battery in the trunk compartment, but when you jump start your vehicle, use the jumper terminal in the engine compartment.**

F040100AEN

### Jump starting

Jump starting can be dangerous if done incorrectly. Therefore, to avoid harm to yourself or damage to your vehicle or battery, follow the jump starting procedures. If in doubt, we strongly recommend that you have a competent technician or towing service jump start your vehicle.

### ⚠ CAUTION

***Use only a 12-volt jumper system. You can damage a 12-volt starting motor, ignition system, and other electrical parts beyond repair by use of a 24-volt power supply (either two 12-volt batteries in series or a 24-volt motor generator set).***

### ⚠ WARNING - Battery

**Never attempt to check the electrolyte level of the battery as this may cause the battery to rupture or explode causing serious injury.**

### ⚠ WARNING - Battery

- **Keep all flames or sparks away from the battery. The battery produces hydrogen gas which may explode if exposed to flame or sparks.**

  **If these instructions are not followed exactly, serious personal injury and damage to the vehicle may occur! If you are not sure how to follow this procedure, seek qualified assistance. Automobile batteries contain sulfuric acid. This is poisonous and highly corrosive. When jump starting, wear protective glasses and be careful not to get acid on yourself, your clothing or on the car.**
- **Do not attempt to jump start the vehicle if the discharged battery is frozen or if the electrolyte level is low; the battery may rupture or explode.**

F040101ABH-EU

***Jump starting procedure***

## ✻ NOTICE

**Your vehicle has a battery in the trunk compartment, but when you jump start your vehicle, use the jumper terminal in the engine compartment.**

1. Make sure the booster battery is 12-volt and that its negative terminal is grounded.
2. If the booster battery is in another vehicle, do not allow the vehicles to touch.
3. Turn off all unnecessary electrical loads.
4. Connect the jumper cables in the exact sequence shown in the illustration. First connect one end of a jumper cable to the positive terminal of the jumper terminal (1), then connect the other end to the positive terminal on the booster battery (2).

   Proceed to connect one end of the other jumper cable to the negative terminal of the booster battery (3), then the other end to the negative terminal of the jumper terminal (4). Do not connect it to or near any part that moves when the engine is cranked.

   Do not allow the jumper cables to contact anything except the correct battery terminals or the correct ground. Do not lean over the battery when making connections.

### ⚠ CAUTION - Battery cables

***If you jump start the discharged battery in the trunk compartment, do not connect the jumper cable from the negative terminal of the booster battery to the negative terminal of the discharged battery. This can cause the discharged battery to overheat and crack, releasing battery acid.***

***Connect the jumper cable from the negative terminal of the booster battery to a solid, stationary or metallic point away from the discharged battery.***

5. Start the engine of the vehicle with the booster battery and let it run at 2,000 rpm, then start the engine of the vehicle with the discharged battery.
6. Let the discharged battery run for at least 20 minutes either by engine idling or by driving before you turn it off else the discharged battery may not be recharged enough to restart the car.

*If the cause of your battery discharging is not apparent, you should have your vehicle checked by an authorized HYUNDAI dealer.*

F040200BBH-EU

## Push-starting

Vehicles equipped with automatic transmission cannot be push-started.

Follow the directions in this section for jump-starting.

## IF THE ENGINE OVERHEATS

F050000ABH

If your temperature gauge indicates overheating, you experience a loss of power, or hear loud pinging or knocking, the engine is probably too hot. If this happens, you should:

1. Pull off the road and stop as soon as it is safe to do so.
2. Place the shift lever in P and set the parking brake. If the air conditioning is on, turn it off.
3. If engine coolant is running out under the car or steam is coming out from the hood, stop the engine. Do not open the hood until the coolant has stopped running or the steaming has stopped. If there is no visible loss of engine coolant and no steam, leave the engine running and check to be sure the engine cooling fan is operating. If the fan is not running, turn the engine off.
4. Check to see if the water pump drive belt is missing. If it is not missing, check to see that it is tight. If the drive belt seems to be satisfactory, check for coolant leaking from the radiator, hoses or under the car. (If the air conditioning had been in use, it is normal for cold water to be draining from it when you stop.)

**⚠ WARNING**

**While the engine is running, keep hair, hands and clothing away from moving parts such as the fan and drive belts to prevent injury.**

5. If the water pump drive belt is broken or engine coolant is leaking out, stop the engine immediately and call the nearest authorized HYUNDAI dealer for assistance.

**⚠ WARNING**

**Do not remove the radiator cap when the engine is hot. This may result in coolant being blown out of the opening and cause serious burns.**

6. If you cannot find the cause of the overheating, wait until the engine temperature has returned to normal. Then, if coolant has been lost, carefully add coolant to the reservoir to bring the fluid level in the reservoir up to the halfway mark.
7. Proceed with caution, keeping alert for further signs of overheating. If overheating happens again, call an authorized HYUNDAI dealer for assistance.

**⚠ CAUTION**

***Serious loss of coolant indicates there is a leak in the cooling system and this should be checked as soon as possible by an authorized HYUNDAI dealer.***

## TIRE PRESSURE MONITORING SYSTEM (TPMS)

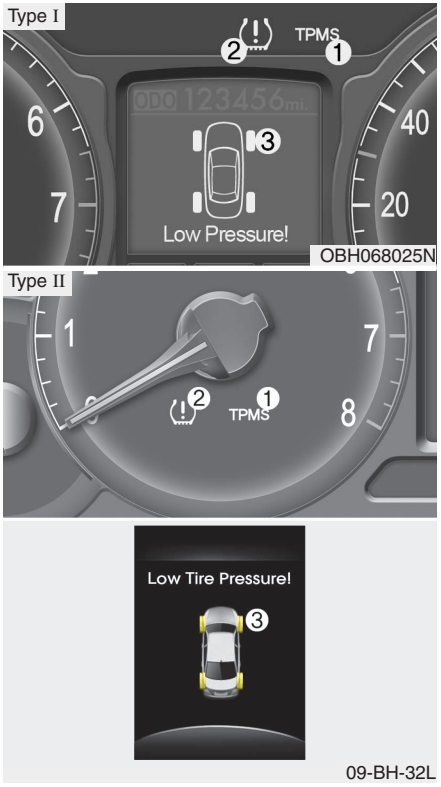


(1) TPMS Malfunction Indicator
(2) Low Tire Pressure Telltale
(3) Low Tire Pressure Position Telltale (if equipped)

F060000ABH

Each tire, including the spare (if provided), should be checked monthly when cold and inflated to the inflation pressure recommended by the vehicle manufacturer on the vehicle placard or tire inflation pressure label. (If your vehicle has tires of a different size than the size indicated on the vehicle placard or tire inflation pressure label, you should determine the proper tire inflation pressure for those tires.)

As an added safety feature, your vehicle has been equipped with a tire pressure monitoring system (TPMS) that illuminates a low tire pressure telltale when one or more of your tires is significantly under-inflated. Accordingly, when the low tire pressure telltale illuminates, you should stop and check your tires as soon as possible, and inflate them to the proper pressure. Driving on a significantly under-inflated tire causes the tire to overheat and can lead to tire failure. Under-inflation also reduces fuel efficiency and tire tread life, and may affect the vehicle's handling and stopping ability.

Please note that the TPMS is not a substitute for proper tire maintenance, and it is the driver's responsibility to maintain correct tire pressure, even if under-inflation has not reached the level to trigger illumination of the TPMS low tire pressure telltale.

Your vehicle has also been equipped with a TPMS malfunction indicator to indicate when the system is not operating properly. The TPMS malfunction indicator is provided by a separate telltale, which displays the symbol "TPMS" when illuminated. When the malfunction indicator is illuminated, the system may not be able to detect or signal low tire pressure as intended. TPMS malfunctions may occur for a variety of reasons, including the installation of replacement or alternate tires or wheels on the vehicle that prevent the TPMS from functioning properly. Always check the TPMS malfunction telltale after replacing one or more tires or wheels on your vehicle to ensure that the replacement or alternate tires and wheels allow the TPMS to continue to function properly.

**✻ NOTICE**

**If the TPMS, Low Tire Pressure telltale does not illuminate for 3 seconds when the ignition switch is turned to the ON position or engine is running, or if it remains illuminated after coming on for approximately 3 seconds, take your car to your nearest authorized HYUNDAI dealer and have the system checked.**

F060100ABH-EU

**Low tire pressure telltale**

**Low tire pressure position telltale**

When the tire pressure monitoring system warning indicators are illuminated, one or more of your tires is significantly under-inflated. The low tire pressure position telltale (supplemental) will indicate which tire is significantly under-inflated by illuminating the corresponding position on the LCD screen (if equipped).

If either telltale illuminates, immediately reduce your speed, avoid hard cornering and anticipate increased stopping distances. You should stop and check your tires as soon as possible. Inflate the tires to the proper pressure as indicated on the vehicle's placard or tire inflation pressure label located on the driver's side center pillar outer panel. If you cannot reach a service station or if the tire cannot hold the newly added air, replace the low pressure tire with the compact spare tire.

The Low Tire Pressure and Position telltale will remain on until you have the low pressure tire repaired and replaced on the vehicle.

✻ NOTICE

**The compact spare tire is not equipped with a tire pressure sensor.**

⚠ CAUTION

***In winter or cold weather, the low tire pressure telltale may be illuminated if the tire pressure was adjusted to the recommended tire inflation pressure in warm weather. It does not mean your TPMS is malfunctioning because the decreased temperature leads to a proportional lowering of tire pressure.***

***When you drive your vehicle from a warm area to a cold area or from a cold area to a warm area, or the outside temperature is greatly higher or lower, you should check the tire inflation pressure and adjust the tires to the recommended tire inflation pressure.***

⚠ **WARNING - Low pressure damage**

**Significantly low tire pressure makes the vehicle unstable and can contribute to loss of vehicle control and increased braking distances.**

**Continued driving on low pressure tires can cause the tires to overheat and fail.**

F060200ABH

TPMS

## TPMS (Tire Pressure Monitoring System) malfunction indicator

The TPMS malfunction indicator comes on and stays on when there is a problem with the Tire Pressure Monitoring System. The system is able to correctly detect an under-inflation warning at the same time as system failure and then it will illuminate both the TPMS malfunction and the low tire pressure telltale. If the Front Left sensor fails, the TPMS malfunction indicator illuminates, but if the Front Right, Rear Left, or Rear Right tire is under-inflated, the low tire pressure and position telltales may illuminate together with the TPMS malfunction indicator.

Have the system checked by an authorized HYUNDAI dealer as soon as possible to determine the cause of the problem.

⚠ **CAUTION**

- ***The TPMS malfunction indicator may be illuminated if the vehicle is moving around electric power supply cables or radio transmitter such as at police stations, government and public offices, broadcasting stations, military installations, airports, or transmitting towers, etc. This can interfere with normal operation of the Tire Pressure Monitoring System (TPMS).***
- ***The TPMS malfunction indicator may be illuminated if snow chains are used or some separate electronic devices such as notebook computer, mobile charger, remote starter or navigation etc., are used in the vehicle. This can interfere with normal operation of the Tire Pressure Monitoring System (TPMS).***

***(Continued)***

***(Continued)***

- ***If there is a failed tire sensor, it is possible for TPMS to temporarily learn a replacement sensor when you drive closely to another vehicle equipped with TPMS too. In rare cases, this may temporarily delay the TPMS malfunction turning on.***

F060300BBH-EU

### Changing a tire with TPMS

If you have a flat tire, the Low Tire Pressure and Position telltales will come on. Have the flat tire repaired by an authorized HYUNDAI dealer as soon as possible or replace the flat tire with the compact spare tire.

⚠ **CAUTION**

***NEVER use a puncture-repairing agent to repair and/or inflate a low pressure tire. The tire sealant can damage the tire pressure sensor. If used, you will have to replace the tire pressure sensor.***

Each wheel is equipped with a tire pressure sensor mounted inside the tire behind the valve stem. You must use TPMS specific wheels. It is recommended that you always have your tires serviced by an authorized HYUNDAI dealer as soon as possible.

The spare tire is not equipped with a tire pressure monitoring sensor.

When the low pressure tire is replaced with the spare tire, the low tire pressure and the low tire pressure position telltales may extinguish and the TPMS malfunction indicator may illuminate after restarting and within 20 minutes continuous driving.

The TPMS malfunction indicator may remain on until the original tire equipped with a tire pressure monitoring sensor is reinflated to the recommended pressure and reinstalled on the vehicle until the vehicle has been driven for a few minutes.

Once the low pressure tire is reinflated to the recommended pressure and installed on the vehicle, the TPMS malfunction indicator and the low tire pressure and position telltales will extinguish within a few minutes of driving.

If the indicators do not extinguish after a few minutes, please visit an authorized HYUNDAI dealer.

You may not be able identify a low tire by simply looking at it. Always use a good quality tire pressure gauge to measure the tire's inflation pressure. Please note that a tire that is hot (from being driven) will have a higher pressure measurement than a tire that is cold (from sitting stationary for at least 3 hours and driven less than 1 mile (1.6km) during that 3 hour period).

Allow the tire to cool before measuring the inflation pressure. Always be sure the tire is cold before inflating to the recommended pressure.

A cold tire means the vehicle has been sitting for 3 hours and driven for less than 1 mile (1.6km) in that 3 hour period.

**⚠ CAUTION**

- ***Do not use any tire sealant if your vehicle is equipped with a Tire Pressure Monitoring System. The liquid sealant can damage the tire pressure sensors.***
- ***In order to correctly monitor tire inflation, the 4 tire pressure monitoring sensors should be exactly fitted to each of the 4 driven wheels. There should not be any other sensors in the vehicle (including in the spare tire), as this may cause the system to incorrectly monitor tire inflation.***

**⚠ WARNING - TPMS**

- **The TPMS cannot alert you to severe and sudden tire damage caused by external factors such as nails or road debris.**
- **If you feel any vehicle instability, immediately take your foot off the accelerator, apply the brakes gradually and with light force, and slowly move to a safe position off the road.**

**⚠ WARNING - Protecting TPMS**

**Tampering with, modifying, or disabling the Tire Pressure Monitoring System (TPMS) components may interfere with the system's ability to warn the driver of low tire pressure conditions and/or TPMS malfunctions. Tampering with, modifying, or disabling the Tire Pressure Monitoring System (TPMS) components may void the warranty for that portion of the vehicle.**

**This device complies with Part 15 of the FCC rules.**

Operation is subject to the following two conditions:

1. This device may not cause harmful interference, and
2. This device must accept any interference received, including interference that may cause undesired operation.

**⚠ WARNING**

**Changes or modifications not expressly approved by the party responsible for compliance could void the user's authority to operate the equipment.**

## IF YOU HAVE A FLAT TIRE

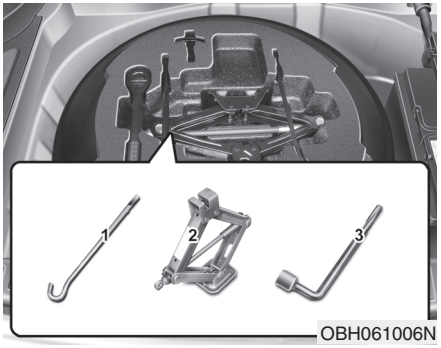


F070100ABH

### Jack and tools

The jack, jack handle, and wheel lug nut wrench are stored in the luggage compartment. Pull up the luggage box cover to reach this equipment.

(1) Jack handle

(2) Jack

(3) Wheel lug nut wrench

F070101AUN

***Jacking instructions***

The jack is provided for emergency tire changing only.

To prevent the jack from “rattling” while the vehicle is in motion, store it properly.

Follow jacking instructions to reduce the possibility of personal injury.

**⚠ WARNING - Changing tires**

- **Never attempt vehicle repairs in the traffic lanes of a public road or highway.**
- **Always move the vehicle completely off the road and onto the shoulder before trying to change a tire. The jack should be used on level firm ground. If you cannot find a firm, level place off the road, call a towing service company for assistance.**

**(Continued)**

**(Continued)**

- **Be sure to use the correct front and rear jacking positions on the vehicle; never use the bumpers or any other part of the vehicle for jack support.**
- **The vehicle can easily roll off the jack causing serious injury or death. No person should place any portion of their body under a vehicle that is supported only by a jack; use vehicle support stands.**
- **Do not start or run the engine while the vehicle is on the jack.**
- **Do not allow anyone to remain in the vehicle while it is on the jack.**
- **Make sure any children present are in a secure place away from the road and from the vehicle to be raised with the jack.**

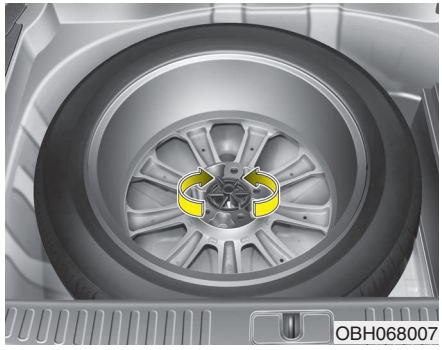


F070200ABH

**Removing and storing the spare tire**

Turn the tire hold-down wing bolt counterclockwise.

Store the tire in the reverse order of removal.

To prevent the spare tire and tools from “rattling” while the vehicle is in motion, store them properly.

⚠ **CAUTION**

***When you remove or store the spare tire, do not contact or bump the battery with the spare tire.***

***Contacting or bumping the battery may cause failure of electrical circuits.***

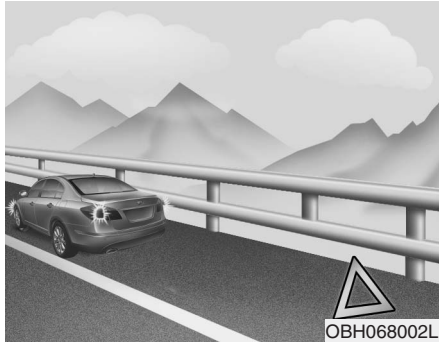


F070300ABH

**Changing tires**

1. Park on a level surface and apply the parking brake firmly.
2. Shift the shift lever into P (Park).
3. Activate the hazard warning flasher.

4. Remove the wheel lug nut wrench, jack, jack handle, and spare tire from the vehicle.
5. Block both the front and rear of the wheel that is diagonally opposite the jack position.

**⚠ WARNING - Changing a tire**

- **To prevent vehicle movement while changing a tire, always set the parking brake fully, and always block the wheel diagonally opposite the wheel being changed.**
- **It is recommended that all passengers exit the vehicle before being lifted by the jack.**

6. Insert the screwdriver into the groove of the wheel cap and pry gently to remove the wheel cap (If equipped).

7. Loosen the wheel lug nuts counterclockwise one turn each in sequence of number, but do not remove any nut until the tire has been raised off the ground.

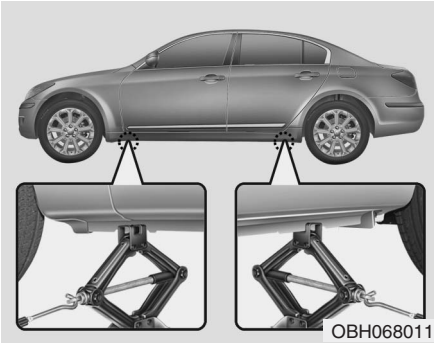


8. Place the jack at the front or rear jacking position closest to the tire you are changing. Place the jack at the designated locations under the frame. The jacking positions are plates welded to the frame with two tabs and a raised dot to index with the jack.

**⚠ WARNING - Jack location**
**To reduce the possibility of injury, be sure to use only the jack provided with the vehicle and in the correct jack position; never use any other part of the vehicle for jack support.**

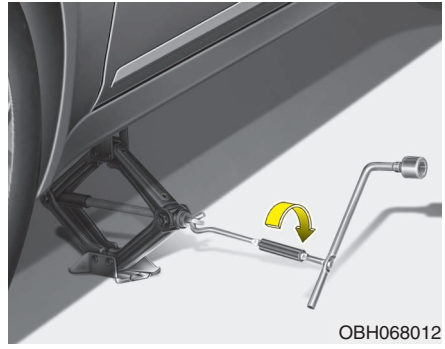


9. Insert the jack handle into the jack and turn it clockwise, raising the vehicle until the tire just clears the ground. This measurement is approximately 30 mm (1.2 in). Before removing the wheel lug nuts, make sure the vehicle is stable and that there is no chance for movement or slippage.

10. Loosen the wheel nuts and remove them with your fingers. Slide the wheel off the studs and lay it flat so it cannot roll away. To put the wheel on the hub, pick up the spare tire, line up the holes with the studs and slide the wheel onto them. If this is difficult, tip the wheel slightly and get the top hole in the wheel lined up with the top stud. Then jiggle the wheel back and forth until the wheel can be slid over the other studs.

**⚠ WARNING**

**Wheels may have sharp edges. Handle them carefully to avoid possible severe injury. Before putting the wheel into place, be sure that there is nothing on the hub or wheel (such as mud, tar, gravel, etc.) that prevents the wheel from fitting solidly against the hub.**

**If there is, remove it. If there is not good contact on the mounting surface between the wheel and hub, the wheel nuts could come loose and cause the loss of a wheel. Loss of a wheel may result in loss of control of the vehicle. This may cause serious injury or death.**

11. To reinstall the wheel, hold it on the studs, put the wheel nuts on the studs and tighten them finger tight. The nuts should be installed with their tapered small diameter ends directed inward. Jiggle the tire to be sure it is completely seated, then tighten the nuts as much as possible with your fingers again.
12. Lower the car to the ground by turning the wheel nut wrench counterclockwise.

Then position the wrench as shown in the drawing and tighten the wheel nuts. Be sure the socket is seated completely over the nut. Do not stand on the wrench handle or use an extension pipe over the wrench handle. Go around the wheel tightening every other nut until they are all tight. Then double-check each nut for tightness. After changing wheels, have an authorized HYUNDAI dealer tighten the wheel nuts to their proper torque as soon as possible.

**Wheel nut tightening torque:**

Steel wheel & aluminum alloy wheel:

65~79 lb·ft (9~11 kg·m)

13. Reinstall the wheel cap by fitting the boss of the wheel cap in the groove of the wheel, hitting the center of the wheel cap with your hand (If equipped).

If you have a tire gauge, remove the valve cap and check the air pressure. If the pressure is lower than recommended, drive slowly to the nearest service station and inflate to the correct pressure. If it is too high, adjust it until it is correct. Always reinstall the valve cap after checking or adjusting tire pressure. If the cap is not replaced, air may leak from the tire. If you lose a valve cap, buy another and install it as soon as possible.

After you have changed wheels, always secure the flat tire in its place and return the jack and tools to their proper storage locations.

**⚠ CAUTION**

***Your vehicle has metric threads on the wheel studs and nuts. Make certain during wheel removal that the same nuts that were removed are reinstalled - or, if replaced, that nuts with metric threads and the same chamfer configuration are used. Installation of a non-metric thread nut on a metric stud or vice-versa will not secure the wheel to the hub properly and will damage the stud so that it must be replaced.***

***Note that most lug nuts do not have metric threads. Be sure to use extreme care in checking for thread style before installing aftermarket lug nuts or wheels. If in doubt, consult an authorized HYUNDAI dealer.***

**⚠ WARNING - Wheel studs**

**If the studs are damaged, they may lose their ability to retain the wheel. This could lead to the loss of the wheel and a collision resulting in serious injuries.**

To prevent the jack, jack handle, wheel lug nut wrench and spare tire from rattling while the vehicle is in motion, store them properly.

**⚠ WARNING - Inadequate spare tire pressure**

**Check the inflation pressures as soon as possible after installing the spare tire. Adjust it to the specified pressure, if necessary. Refer to “Tires and wheels” section 8.**

F070301BBH

***Important - use of compact spare tire***

Your vehicle is equipped with a compact spare tire. This compact spare tire takes up less space than a regular-size tire. This tire is smaller than a conventional tire and is designed for temporary use only.

**⚠ CAUTION**

- ***You should drive carefully when the compact spare is in use. The compact spare should be replaced by the proper conventional tire and rim at the first opportunity.***
- ***The operation of this vehicle is not recommended with more than one compact spare tire in use at the same time.***

**⚠ WARNING**

**The compact spare tire is for emergency use only. Do not operate your vehicle on this compact spare at speeds over 50 mph (80 km/h). The original tire should be repaired or replaced as soon as is possible to avoid failure of the spare possibly leading to personal injury or death.**

The compact spare should be inflated to 60 psi (420 kPa).

**✱ NOTICE**

**Check the inflation pressure after installing the spare tire. Adjust it to the specified pressure, as necessary.**

When using a compact spare tire, observe the following precautions:

- Under no circumstances should you exceed 50 mph (80 km/h); a higher speed could damage the tire.
- Ensure that you drive slowly enough for the road conditions to avoid all hazards. Any road hazard, such as a pothole or debris, could seriously damage the compact spare.
- Any continuous road use of this tire could result in tire failure, loss of vehicle control, and possible personal injury.
- Do not exceed the vehicle's maximum load rating or the load-carrying capacity shown on the sidewall of the compact spare tire.
- Avoid driving over obstacles. The compact spare tire diameter is smaller than the diameter of a conventional tire and reduces the ground clearance approximately 1 inch (25 mm), which could result in damage to the vehicle.

- Do not take this vehicle through an automatic car wash while the compact spare tire is installed.
- Do not use tire chains on the compact spare tire. Because of the smaller size, a tire chain will not fit properly. This could damage the vehicle and result in loss of the chain.
- Do not use the compact spare tire on any other vehicle because this tire has been designed especially for your vehicle.
- The compact spare tire's tread life is shorter than a regular tire. Inspect your compact spare tire regularly and replace worn compact spare tires with the same size and design, mounted on the same wheel.
- The compact spare tire should not be used on any other wheels, nor should standard tires, snow tires, wheel covers or trim rings be used with the compact spare wheel. If such use is attempted, damage to these items or other car components may occur.
- Do not use more than one compact spare tire at a time.
- Do not tow a trailer while the compact spare tire is installed.

⚠ **CAUTION**

***When the original tire and wheel are repaired and reinstalled on the vehicle, the wheel nut torque must be set correctly to prevent wheel vibration. The correct wheel nut tightening torque is 65~79lb-ft (9~11kg.m).***

## TOWING

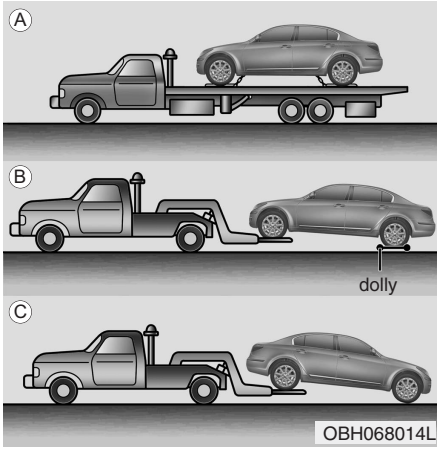


F080100ABH-EU

### Towing service

If emergency towing is necessary, we recommend having it done by an authorized HYUNDAI dealer or a commercial tow-truck service. Proper lifting and towing procedures are necessary to prevent damage to the vehicle. The use of wheel dollies or flatbed is recommended.

It is acceptable to tow the vehicle with the front wheels on the ground (without dollies) and the rear wheels off the ground.

If any of the loaded wheels or suspension components are damaged or the vehicle is being towed with the rear wheels on the ground, use a towing dolly under the rear wheels.

When being towed by a commercial tow truck and wheel dollies are not used, the rear of the vehicle should always be lifted, not the front.

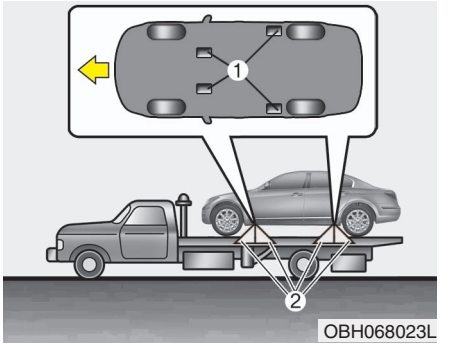


### ✻ NOTICE

**When you tow the vehicle as the picture (A), the cable should be secured to the vehicle towing hook (1) as the picture.**
**If you use chains or cables to tie down your vehicle, the angle (2) must be 45°.**
**Do not overly tighten the tie downs or the vehicle may be damaged.**

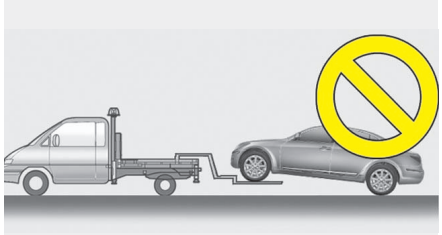

OBH068016

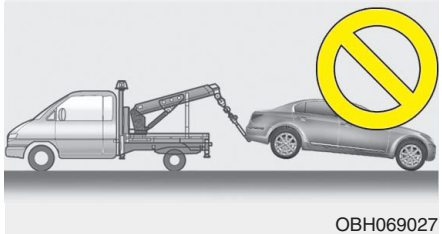

OBH069027

⚠ **CAUTION**

- ***Do not tow the vehicle with the rear wheels on the ground as this may cause damage to the vehicle.***
- ***Do not tow with sling-type equipment. Use wheel lift or flatbed equipment.***

When towing your vehicle in an emergency without wheel dollies :

1. Set the ignition switch in the ACC position.
2. Place the shift lever in N (Neutral).
3. Release the parking brake.

⚠ **CAUTION**

***Failure to place the transmission shift lever in N (Neutral) may cause internal damage to the transmission.***

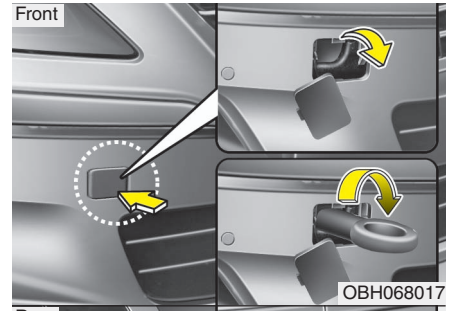


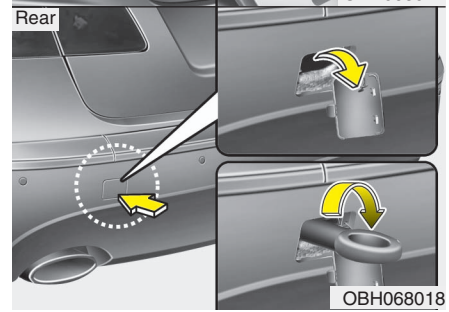


F080200ABH

## Removable towing hook (if equipped)

1. Open the trunk, and remove the towing hook from the tool case.
2. Remove the hole cover by pressing the lower part of the cover on the front or rear bumper.

3. Install the towing hook by turning it clockwise into the hole until it is fully secured.
4. Remove the towing hook and install the cover after use.

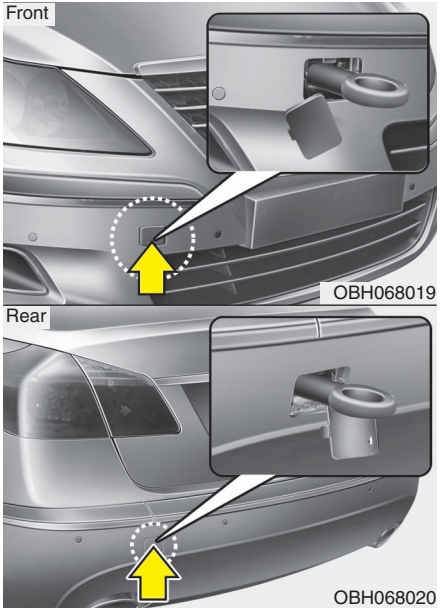


F080300AFD

## Emergency towing

**If towing is necessary, we recommend you to have it done by an authorized HYUNDAI dealer or a commercial tow truck service.**

If towing service is not available in an emergency, your vehicle may be temporarily towed using a cable or chain secured to the emergency towing hook under the front (or rear) of the vehicle. Use extreme caution when towing the vehicle. A driver must be in the vehicle to steer it and operate the brakes.

Towing in this manner may be done only on hard-surfaced roads for a short distance and at low speeds. Also, the wheels, axles, power train, steering and brakes must all be in good condition.

- Do not use the tow hooks to pull a vehicle out of mud, sand or other conditions from which the vehicle cannot be driven out under its own power.
- Avoid towing a vehicle heavier than the vehicle doing the towing.
- The drivers of both vehicles should communicate with each other frequently.

### ⚠ CAUTION

- ***Attach a towing strap to the tow hook.***
- ***Using a portion of the vehicle other than the tow hooks for towing may damage the body of your vehicle.***
- ***Use only a cable or chain specifically intended for use in towing vehicles. Securely fasten the cable or chain to the towing hook provided.***

- Before emergency towing, check that the hook is not broken or damaged.
- Fasten the towing cable or chain securely to the hook.
- Do not jerk the hook. Apply steady and even force.
- To avoid damaging the hook, do not pull from the side or at a vertical angle. Always pull straight ahead.

### ⚠ WARNING

**Use extreme caution when towing the vehicle.**

- **Avoid sudden starts or erratic driving maneuvers which would place excessive stress on the emergency towing hook and towing cable or chain. The hook and towing cable or chain may break and cause serious injury or damage.**
- **If the disabled vehicle cannot be moved, do not forcibly continue the towing. Contact an authorized HYUNDAI dealer or a commercial tow truck service for assistance.**
- **Tow the vehicle as straight ahead as possible.**
- **Keep away from the vehicle during towing.**

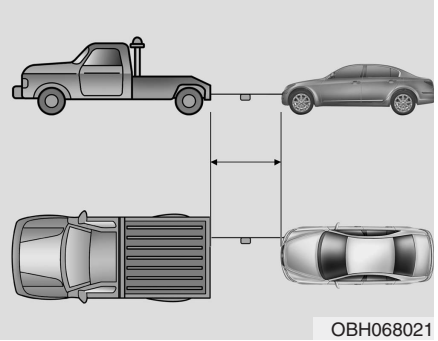
OBH068021

- Use a towing strap less than 16 feet (5 m) long. Attach a white or red cloth (about 12 inches (30 cm) wide) in the middle of the strap for easy visibility.
- Drive carefully so that the towing strap is not loosened during towing.

### ✻ NOTICE

**Emergency towing is not legal in all states. Contact an authorized HYUNDAI dealer and tow the vehicle.**

F080301ABH

### *Emergency towing precautions*

- Place the transmission shift lever in N (Neutral).
- Release the parking brake.
- Press the brake pedal with more force than normal since you will have reduced brake performance.
- More steering effort will be required because the power steering system will be disabled.
- If you are driving down a long hill, the brakes may overheat and brake performance will be reduced. Stop often and let the brakes cool off.

**⚠ CAUTION - Automatic transmission**

- ***If the car is being towed with all four wheels on the ground, it can be towed only from the front. Be sure that the transmission is in neutral. Be sure the steering is unlocked by placing the ignition switch in the ACC position. A driver must be in the towed vehicle to operate the steering and brakes.***
- ***To avoid serious damage to the automatic transmission, limit the vehicle speed to 10 mph (15 km/h) and drive less than 1 mile (1.5 km) when towing.***
- ***Before towing, check the automatic transmission for fluid leaks under your vehicle. If the automatic transmission fluid is leaking, flatbed equipment or a towing dolly must be used.***

Engine compartment / 7-2
Maintenance services / 7-5
Owner maintenance / 7-6
Scheduled maintenance service / 7-8
Explanation of scheduled maintenance items / 7-13
Engine oil / 7-16
Engine coolant / 7-18
Brake fluid / 7-21
Power steering fluid / 7-22
Washer fluid / 7-23
Parking brake / 7-24
Air cleaner / 7-24
Climate control air filter / 7-27
Wiper blades / 7-29
Battery / 7-32
Tires and wheels / 7-35
Fuses / 7-49

# Maintenance 7

Light bulbs / 7-60
Appearance care / 7-69
Emission control system / 7-75
California perchlorate notice / 7-78

## ENGINE COMPARTMENT

■ **3.8L Engine**

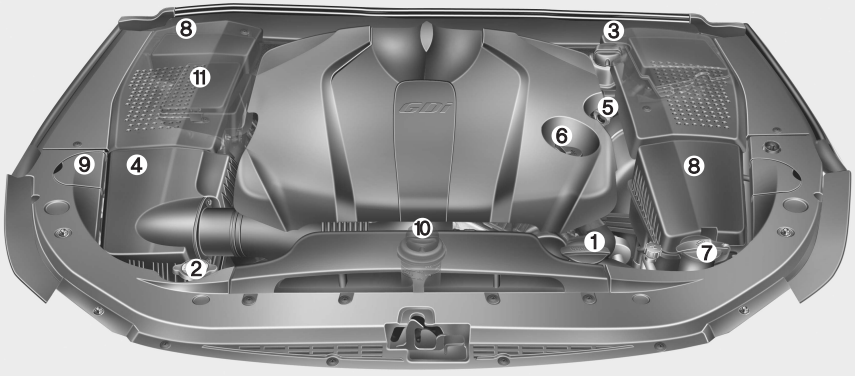


1. Engine coolant reservoir
2. Radiator cap
3. Brake fluid reservoir
4. Air cleaner
5. Engine oil dipstick
6. Engine oil filler cap
7. Windshield washer fluid reservoir
8. Fuse box
9. Power steering fluid reservoir (with EHPS)
10. Power steering fluid reservoir (without EHPS)
11. Jumper terminal

* The actual engine compartment in the vehicle may differ from the illustration.
* The battery is in the trunk.

OBH012101L

G010000ABH-EU

■ 4.6L Engine

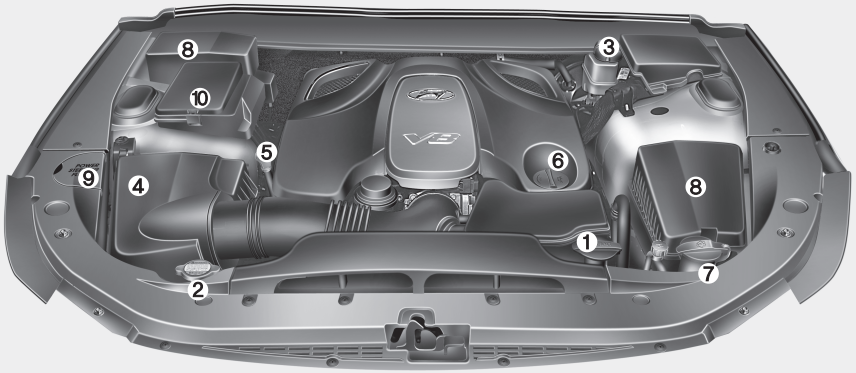


1. Engine coolant reservoir
2. Radiator cap
3. Brake fluid reservoir
4. Air cleaner
5. Engine oil dipstick
6. Engine oil filler cap
7. Windshield washer fluid reservoir
8. Fuse box
9. Power steering fluid reservoir
10. Jumper terminal

* The actual engine compartment in the vehicle may differ from the illustration.
* The battery is in the trunk.

OBH018005N

■ **5.0L Engine**

1. Engine coolant reservoir
2. Radiator cap
3. Brake fluid reservoir
4. Air cleaner
5. Engine oil dipstick
6. Engine oil filler cap
7. Windshield washer fluid reservoir
8. Fuse box
9. Power steering fluid reservoir
10. Jumper terminal

* The actual engine compartment in the vehicle may differ from the illustration.
* The battery is in the trunk.

OBH011101

## MAINTENANCE SERVICES

G020000AEN

You should exercise the utmost care to prevent damage to your vehicle and injury to yourself whenever performing any maintenance or inspection procedures.

Should you have any doubts concerning the inspection or servicing of your vehicle, we strongly recommend that you have an authorized HYUNDAI dealer perform this work.

An authorized HYUNDAI dealer has factory-trained technicians and genuine HYUNDAI parts to service your vehicle properly. For expert advice and quality service, see an authorized HYUNDAI dealer.

Inadequate, incomplete or insufficient servicing may result in operational problems with your vehicle that could lead to vehicle damage, an accident, or personal injury.

G020100AEN-EU

### Owner’s responsibility

**✻ NOTICE**

**Maintenance Service and Record Retention are the owner's responsibility.**

You should retain documents that show proper maintenance has been performed on your vehicle in accordance with the scheduled maintenance service charts shown on the following pages. You need this information to establish your compliance with the servicing and maintenance requirements of your vehicle warranties.

Detailed warranty information is provided in your Owner’s Handbook & Warranty Information booklet.

Repairs and adjustments required as a result of improper maintenance or a lack of required maintenance are not covered.

We recommend you have your vehicle maintained and repaired by an authorized HYUNDAI dealer. An authorized HYUNDAI dealer meets HYUNDAI’s high service quality standards and receives technical support from HYUNDAI in order to provide you with a high level of service satisfaction.

G020200AEN-EU

### Owner maintenance precautions

Improper or incomplete service may result in problems. This section gives instructions only for the maintenance items that are easy to perform.

As explained earlier in this section, several procedures can be done only by an authorized HYUNDAI dealer with special tools.

**✻ NOTICE**

**Improper owner maintenance during the warranty period may affect warranty coverage. For details, read the separate Owner’s Handbook & Warranty Information booklet provided with the vehicle. If you're unsure about any servicing or maintenance procedure, have it done by an authorized HYUNDAI dealer.**

**⚠ WARNING - Maintenance work**

- **Performing maintenance work on a vehicle can be dangerous. You can be seriously injured while performing some maintenance procedures. If you lack sufficient knowledge and experience or the proper tools and equipment to do the work, have it done by an authorized HYUNDAI dealer.**
- **Working under the hood with the engine running is dangerous. It becomes even more dangerous when you wear jewelry or loose clothing. These can become entangled in moving parts and result in injury. Therefore, if you must run the engine while working under the hood, make certain that you remove all jewelry (especially rings, bracelets, watches, and necklaces) and all neckties, scarves, and similar loose clothing before getting near the engine or cooling fans.**

## OWNER MAINTENANCE

G030000AEN

The following lists are vehicle checks and inspections that should be performed by the owner or an authorized HYUNDAI dealer at the frequencies indicated to help ensure safe, dependable operation of your vehicle.

Any adverse conditions should be brought to the attention of your dealer as soon as possible.

These Owner Maintenance Checks are generally not covered by warranties and you may be charged for labor, parts and lubricants used.

### Owner maintenance schedule

G030101AUN

***When you stop for fuel:***

- Check the engine oil level.
- Check coolant level in coolant reservoir.
- Check the windshield washer fluid level.
- Look for low or under-inflated tires.

**⚠ WARNING**

**Be careful when checking your engine coolant level when the engine is hot. Scalding hot coolant and steam may blow out under pressure. This could cause burns or other serious injury.**

G030102ABH

***While operating your vehicle:***

- Note any changes in the sound of the exhaust or any smell of exhaust fumes in the vehicle.
- Check for vibrations in the steering wheel. Notice any increased steering effort or looseness in the steering wheel, or change in its straight-ahead position.
- Notice if your vehicle constantly turns slightly or “pulls” to one side when traveling on smooth, level road.
- When stopping, listen and check for unusual sounds, pulling to one side, increased brake pedal travel or “hard-to-push” brake pedal.
- If any slipping or changes in the operation of your transmission occurs, check the transmission fluid level.
- Check automatic transmission P (Park) function.
- Check parking brake.
- Check for fluid leaks under your vehicle (water dripping from the air conditioning system during or after use is normal).

G030103AUN

***At least monthly:***

- Check coolant level in the engine coolant reservoir.
- Check the operation of all exterior lights, including the stoplights, turn signals and hazard warning flashers.
- Check the inflation pressures of all tires including the spare.

G030104AUN

***At least twice a year (i.e., every Spring and Fall):***

- Check radiator, heater and air conditioning hoses for leaks or damage.
- Check windshield washer spray and wiper operation. Clean wiper blades with clean cloth dampened with washer fluid.
- Check headlight alignment.
- Check muffler, exhaust pipes, shields and clamps.
- Check the lap/shoulder belts for wear and function.
- Check for worn tires and loose wheel lug nuts.

G030105AUN-EU

***At least once a year:***

- Clean body and door drain holes.
- Lubricate door hinges and checks, and hood hinges.
- Lubricate door and hood locks and latches.
- Lubricate door rubber weatherstrips.
- Check the air conditioning system.
- Check the power steering fluid level.
- Inspect and lubricate automatic transmission linkage and controls.
- Clean battery and terminals.
- Check the brake fluid level.

## SCHEDULED MAINTENANCE SERVICE

G040000AUN-EU

Follow Normal Maintenance Schedule if the vehicle is usually operated where none of the following conditions apply. If any of the following conditions apply, follow Maintenance Under Severe Usage Conditions.

- Repeated short distance driving.
- Driving in dusty conditions or sandy areas.
- Extensive use of brakes.
- Driving in areas where salt or other corrosive materials are being used.
- Driving on rough or muddy roads.
- Driving in mountainous areas.
- Extended periods of idling or low speed operation.
- Driving for a prolonged period in cold temperatures and/or extremely humid climates.
- More than 50% driving in heavy city traffic during hot weather above 90°F (32°C).

*If your vehicle is operated under the above conditions, you should inspect, replace or refill more frequently than the following Normal Maintenance Schedule. After 120 months or 150,000 miles (240,000 km) continue to follow the prescribed maintenance intervals.*

G040100ABH-EU

## NORMAL MAINTENANCE SCHEDULE

The following maintenance services must be performed to ensure good emission control and performance. Keep receipts for all vehicle emission services to protect your warranty. Where both mileage and time are shown, the frequency of service is determined by whichever occurs first.

R : Replace I : Inspect and, after Inspection, clean, adjust, repair or replace if necessary.

| No. | DESCRIPTION | MILES X 1000 | 7.5 | 15 | 22.5 | 30 | 37.5 | 45 | 52.5 | 60 | 67.5 | 75 | 82.5 | 90 | 97.5 | 105 | 112.5 | 120 | 127.5 | 135 | 142.5 | 150 |
|---|---|---|---|---|---|---|---|---|---|---|---|---|---|---|---|---|---|---|---|---|---|---|
| | | KILOMETERS X 1000 | 12 | 24 | 36 | 48 | 60 | 72 | 84 | 96 | 108 | 120 | 132 | 144 | 156 | 168 | 180 | 192 | 204 | 216 | 228 | 240 |
| | | MONTHS | 6 | 12 | 18 | 24 | 30 | 36 | 42 | 48 | 54 | 60 | 66 | 72 | 78 | 84 | 90 | 96 | 102 | 108 | 114 | 120 |
| | EMISSION CONTROL ITEMS | | | | | | | | | | | | | | | | | | | | | |
| 1 | ENGINE OIL AND FILTER | | Replace every 7,500 miles (12,000 km) or 12 months | | | | | | | | | | | | | | | | | | | |
| 2 | FUEL ADDITIVES*1 | | Add every 7,500 miles (12,000 km) or 12 months | | | | | | | | | | | | | | | | | | | |
| 3 | FUEL FILTER | | | | | | R | | | | | R | | | | | R | | | | | R |
| 4 | FUEL LINES, FUEL HOSES AND CONNECTIONS | | I | I | I | I | I | I | I | I | I | I | I | I | I | I | I | I | I | I | I | I |
| 5 | VACUUM HOSE | | I | I | I | I | I | I | I | I | I | I | I | I | I | I | I | I | I | I | I | I |
| 6 | VAPOR HOSE AND FUEL FILLER CAP | | I | I | I | I | I | I | I | I | I | I | I | I | I | I | I | I | I | I | I | I |
| 7 | AIR CLEANER FILTER | | I | I | I | R | I | I | I | R | I | I | I | R | I | I | I | R | I | I | I | R |
| 8 | SPARK PLUGS (IRIDIUM COATED) | | | | | | | | | | | | | | | R | | | | | | |
| 9 | VALVE CLEARANCE *2 (3.8L) | | | | | | | | | I | | | | | | | | I | | | | |
| 10 | FUEL TANK AIR FILTER | | I | I | I | R | I | I | I | R | I | I | I | R | I | I | I | R | I | I | I | R |

*1 : If TOP TIER Detergent Gasoline is not available, one bottle of HYUNDAI Fuel System Cleaner Plus is recommended. They are available from your authorized HYUNDAI dealer along with information on how to use them. Do not mix other additives.

*2 : Inspect for excessive tappet noise and/or engine vibration and adjust if necessary.

## NORMAL MAINTENANCE SCHEDULE (CONT.)

R : Replace I : Inspect and, after Inspection, clean, adjust, repair or replace if necessary.

| No. | DESCRIPTION | MILES X 1000 | 7.5 | 15 | 22.5 | 30 | 37.5 | 45 | 52.5 | 60 | 67.5 | 75 | 82.5 | 90 | 97.5 | 105 | 112.5 | 120 | 127.5 | 135 | 142.5 | 150 |
|---|---|---|---|---|---|---|---|---|---|---|---|---|---|---|---|---|---|---|---|---|---|---|
| | | KILOMETERS X 1000 | 12 | 24 | 36 | 48 | 60 | 72 | 84 | 96 | 108 | 120 | 132 | 144 | 156 | 168 | 180 | 192 | 204 | 216 | 228 | 240 |
| | | MONTHS | 6 | 12 | 18 | 24 | 30 | 36 | 42 | 48 | 54 | 60 | 66 | 72 | 78 | 84 | 90 | 96 | 102 | 108 | 114 | 120 |
| | GENERAL ITEMS | | | | | | | | | | | | | | | | | | | | | |
| 1 | DRIVE BELT*1 | | At first, inspect the drive belt at 60,000 miles (96,000 km) or 72 months; after that, inspect it 15,000 miles (24,000 km) or 24 months | | | | | | | | | | | | | | | | | | | |
| 2 | COOLANT*2 | | At first, replace the coolant at 120,000 miles (192,000 km) or 120 months; after that, replace it every 30,000 miles (48,000 km) or 24 months | | | | | | | | | | | | | | | | | | | |
| 3 | AUTOMATIC TRANSMISSION FLUID*3 | | No check, No service required | | | | | | | | | | | | | | | | | | | |
| 4 | BRAKE FLUID | | | | | I | | | | I | | | | I | | | | I | | | | I |
| 5 | BRAKE HOSES AND LINES | | | I | | I | | I | | I | | I | | I | | I | | I | | I | | I |
| 6 | FRONT DISC BRAKE/PADS, CALIPERS | | | I | | I | | I | | I | | I | | I | | I | | I | | I | | I |
| 7 | REAR BRAKE DISC/PADS | | | I | | I | | I | | I | | I | | I | | I | | I | | I | | I |
| 8 | PARKING BRAKE | | | | | I | | | | I | | | | I | | | | I | | | | I |
| 9 | EXHAUST PIPE AND MUFFLER | | | I | | I | | I | | I | | I | | I | | I | | I | | I | | I |
| 10 | SUSPENSION MOUNTING BOLTS | | | I | | I | | I | | I | | I | | I | | I | | I | | I | | I |

*1 : The drive belt should be replaced when cracks occur or tension is reduced excessively.

*2 : When adding coolant, use only deionized water or soft water for your vehicle and never mix hard water in the coolant filled at the factory. An improper coolant mixture can result in serious malfunction or engine damage.

*3 : Use only the specified automatic transmission fluid. (Refer to “Recommended lubricants and capacities” in section 8 or the label in the engine room.)

## NORMAL MAINTENANCE SCHEDULE (CONT.)

R : Replace I : Inspect and, after Inspection, clean, adjust, repair or replace if necessary.

| No. | DESCRIPTION | MILES X 1000 | 7.5 | 15 | 22.5 | 30 | 37.5 | 45 | 52.5 | 60 | 67.5 | 75 | 82.5 | 90 | 97.5 | 105 | 112.5 | 120 | 127.5 | 135 | 142.5 | 150 |
|---|---|---|---|---|---|---|---|---|---|---|---|---|---|---|---|---|---|---|---|---|---|---|
| | | KILOMETERS X 1000 | 12 | 24 | 36 | 48 | 60 | 72 | 84 | 96 | 108 | 120 | 132 | 144 | 156 | 168 | 180 | 192 | 204 | 216 | 228 | 240 |
| | | MONTHS | 6 | 12 | 18 | 24 | 30 | 36 | 42 | 48 | 54 | 60 | 66 | 72 | 78 | 84 | 90 | 96 | 102 | 108 | 114 | 120 |
| | GENERAL ITEMS | | | | | | | | | | | | | | | | | | | | | |
| 11 | STEERING GEAR BOX, LINKAGE & BOOTS /LOWER ARM BALL JOINT, UPPER ARM BALL JOINT | | | I | | I | | I | | I | | I | | I | | I | | I | | I | | I |
| 12 | POWER STEERING FLUID | | I | I | I | I | I | I | I | I | I | I | I | I | I | I | I | I | I | I | I | I |
| 13 | POWER STEERING PUMP, BELT AND HOSES | | | I | | I | | I | | I | | I | | I | | I | | I | | I | | I |
| 14 | EHPS MOTOR PUMP AND HOSES (IF EQUIPPED) | | Inspect every 12,000 miles (20,000 km) | | | | | | | | | | | | | | | | | | | |
| 15 | DRIVE SHAFTS AND BOOTS | | | I | | I | | I | | I | | I | | I | | I | | I | | I | | I |
| 16 | AIR CONDITIONING REFRIGERANT | | | I | | I | | I | | I | | I | | I | | I | | I | | I | | I |
| 17 | CLIMATE CONTROL AIR FILTER (FOR EVAPORATOR AND BLOWER UNIT) | | | R | | R | | R | | R | | R | | R | | R | | R | | R | | R |
| 18 | REAR DIFFERENTIAL OIL*4 | | | | | | I | | | | | I | | | | | I | | | | | I |
| 19 | PROPELLER SHAFT | | | I | | I | | I | | I | | I | | I | | I | | I | | I | | I |

*4 : Rear differential oil should be changed anytime the rear differential have been submerged in water.

G040200ABH-EU

## MAINTENANCE UNDER SEVERE USAGE CONDITIONS

The following items must be serviced more frequently on cars normally used under severe driving conditions. Refer to the chart below for the appropriate maintenance intervals.

R : Replace I : Inspect and, after inspection, clean, adjust, repair or replace if necessary

| MAINTENANCE ITEM | MAINTENANCE OPERATION | MAINTENANCE INTERVALS | DRIVING CONDITION |
|---|---|---|---|
| ENGINE OIL AND FILTER | R | EVERY 3,750 MILES (6,000 KM) OR 6 MONTHS | A, B, C, D, E, F, G, H, I, J, K |
| AIR CLEANER FILTER | I | MORE FREQUENTLY | C, E |
| SPARK PLUGS | R | MORE FREQUENTLY | A, B, H, I, K |
| AUTOMATIC TRANSMISSION FLUID | R | EVERY 60,000 MILES (96,000 KM) | A, C, D, E, F, G, H, I |
| FRONT DISC BRAKE/PADS, CALIPERS | I | MORE FREQUENTLY | C, D, G, H |
| REAR BRAKE DISC/PADS | I | MORE FREQUENTLY | C, D, G, H |
| PARKING BRAKE | I | MORE FREQUENTLY | C, D, G, H |
| STEERING GEAR BOX, LINKAGE & BOOTS/ LOWER ARM BALL JOINT, UPPER ARM BALL JOINT | I | MORE FREQUENTLY | C, D, E, F, G, H, I |
| DRIVE SHAFTS AND BOOTS | I | EVERY 7,500 MILES (12,000 KM) OR 6 MONTHS | C, D, E, F, H |
| CLIMATE CONTROL AIR FILTER (FOR EVAPORATOR AND BLOWER UNIT) | R | MORE FREQUENTLY | C, E |
| REAR DIFFERENTIAL OIL | R | EVERY 80,000 MILES (128,000 KM) | C, E, G, I, K |
| PROPELLER SHAFT | I | EVERY 7,500 MILES (12,000 KM) OR 6 MONTHS | C, E |

**SEVERE DRIVING CONDITIONS**

A - Repeatedly driving short distance of less than 5 miles (8 km) in normal temperature or less than 10 miles (16 km) in freezing temperature
B - Extensive engine idling or low speed driving for long distances
C - Driving on rough, dusty, muddy, unpaved, graveled or salt- spread roads
D - Driving in areas using salt or other corrosive materials or in very cold weather
E - Driving in sandy areas
F - Driving in heavy traffic area over 90°F (32°C)
G - Driving on uphill, downhill, or mountain road
H - Towing a Trailer, or using a camper, or roof rack
I - Driving as a patrol car, taxi, other commercial use or vehicle towing
J - Driving over 106 mph (170 km/h)
K - Frequently driving in stop-and-go conditions

## EXPLANATION OF SCHEDULED MAINTENANCE ITEMS

G050100AUN

### Engine oil and filter

The engine oil and filter should be changed at the intervals specified in the maintenance schedule. If the car is being driven in severe conditions, more frequent oil and filter changes are required.

G050200AUN

### Drive belts

Inspect all drive belts for evidence of cuts, cracks, excessive wear or oil saturation and replace if necessary.

G050300ABH

### Fuel filter

A clogged filter can limit the speed at which the vehicle may be driven, damage the emission system and cause multiple issues such as hard starting. If an excessive amount of foreign matter accumulates in the fuel tank, the filter may require replacement more frequently.

After installing a new filter, run the engine for several minutes, and check for leaks at the connections. Fuel filters should be installed by an authorized HYUNDAI dealer.

G050400AEN-EU

### Fuel lines, fuel hoses and connections

Check the fuel lines, fuel hoses and connections for leakage and damage. Have an authorized HYUNDAI dealer replace any damaged or leaking parts immediately.

G050600AUN

### Vapor hose and fuel filler cap

The vapor hose and fuel filler cap should be inspected at those intervals specified in the maintenance schedule. Make sure that a new vapor hose or fuel filler cap is correctly replaced.

G050700AUN

### Vacuum hose

Inspect the surface of hoses for evidence of heat and/or mechanical damage. Hard and brittle rubber, cracking, tears, cuts, abrasions, and excessive swelling indicate deterioration. Particular attention should be paid to examine those hose surfaces nearest to high heat sources, such as the exhaust manifold.

Inspect the hose routing to assure that the hoses do not come in contact with any heat source, sharp edges or moving component which might cause heat damage or mechanical wear.

Inspect all hose connections, such as clamps and couplings, to make sure they are secure, and that no leaks are present. Hoses should be replaced immediately if there is any evidence of deterioration or damage.

G050800AEN

### Air cleaner filter

A Genuine HYUNDAI air cleaner filter is recommended when the filter is replaced.

G050900AUN

## Spark plugs

Make sure to install new spark plugs of the correct heat range.

G051000AEN

## Valve clearance (3.8L)

Inspect excessive valve noise and/or engine vibration and adjust if necessary. An authorized HYUNDAI dealer should perform the operation.

G051100AUN

## Cooling system

Check cooling system components, such as radiator, coolant reservoir, hoses and connections for leakage and damage. Replace any damaged parts.

G051200AUN

## Coolant

The coolant should be changed at the intervals specified in the maintenance schedule.

## Automatic transmission fluid

Automatic transmission fluid should not be checked under normal usage conditions.

But in severe conditions, the fluid should be changed at an authorized HYUNDAI dealer in accordance to the scheduled maintenance at the beginning of this chapter.

### ✻ NOTICE

**Automatic transmission fluid color is basically red.**
**As the vehicle is driven, the automatic transmission fluid will begin to look darker.**
**This is normal condition and you should not judge the need to replace the fluid based upon the changed color.**

### ⚠ CAUTION

***The use of a non-specified fluid could result in transmission malfunction and failure.***

***Use only specified automatic transmission fluid. (Refer to "Recommended lubricants and capacities" in section 8.)***

G051500AUN

## Brake hoses and lines

Visually check for proper installation, chafing, cracks, deterioration and any leakage. Replace any deteriorated or damaged parts immediately.

G051600AUN

## Brake fluid

Check brake fluid level in the brake fluid reservoir. The level should be between "MIN" and "MAX" marks on the side of the reservoir. Use only hydraulic brake fluid conforming to DOT 3 or DOT 4 specification.

Never mix different types of fluid.

G051700AUN

## Parking brake

Inspect the parking brake system including the parking brake pedal and cables.

G051900AUN

### Brake discs, pads, calipers and rotors

Check the pads for excessive wear, discs for run out and wear, and calipers for fluid leakage.

G052000AUN

### Exhaust pipe and muffler

Visually inspect the exhaust pipes, muffler and hangers for cracks, deterioration, or damage. Start the engine and listen carefully for any exhaust gas leakage. Tighten connections or replace parts as necessary.

G052100AUN

### Suspension mounting bolts

Check the suspension connections for looseness or damage. Retighten to the specified torque.

G052200AUN

### Steering gear box, linkage & boots/lower arm ball joint

With the vehicle stopped and engine off, check for excessive free-play in the steering wheel.

Check the linkage for bends or damage. Check the dust boots and ball joints for deterioration, cracks, or damage. Replace any damaged parts.

G052300AEN

### Power steering pump, belt and hoses

Check the power steering pump and hoses for leakage and damage. Replace any damaged or leaking parts immediately. Inspect the power steering belt (or drive belt) for evidence of cuts, cracks, excessive wear, oiliness and proper tension. Replace or adjust it if necessary.

G052400AUN

### Drive shafts and boots

Check the drive shafts, boots and clamps for cracks, deterioration, or damage. Replace any damaged parts and, if necessary, repack the grease.

G052500AUN

### Air conditioning refrigerant

Check the air conditioning lines and connections for leakage and damage.

## ENGINE OIL

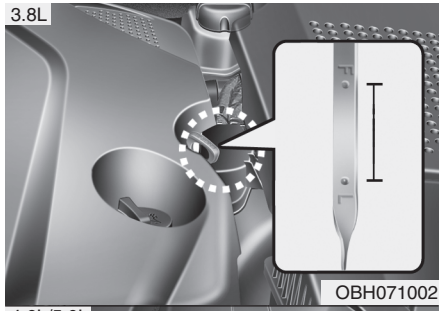


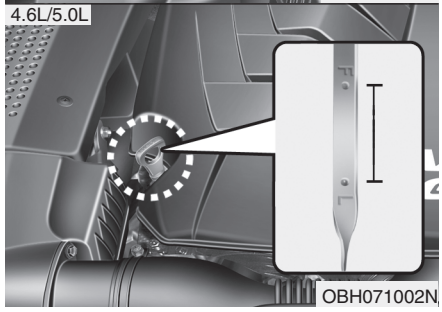


G060100AEN-EU

### Checking the engine oil level

1. Be sure the vehicle is on level ground.
2. Start the engine and allow it to reach normal operating temperature.
3. Turn the engine off and wait for a few minutes (about 5 minutes) for the oil to return to the oil pan.
4. Pull the dipstick out, wipe it clean, and re-insert it fully.

> **⚠ WARNING - Radiator hose**
> **Be very careful not to touch the radiator hose when checking or adding the engine oil as it may be hot enough to burn you.**

5. Pull the dipstick out again and check the level. The level should be between F and L.

> **⚠ CAUTION**
> - ***Do not overfill with engine oil. Engine damage may result.***
> - ***Do not spill engine oil, when adding or changing engine oil. If you spill engine oil in the engine room, wipe it off immediately.***

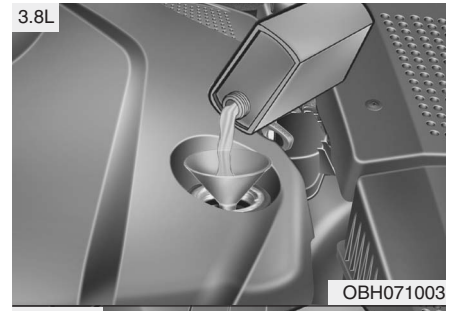


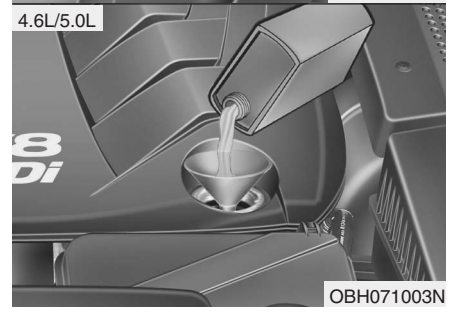


If it is near or at L, add enough oil to bring the level to F. **Do not overfill.**

**Use a funnel to help prevent oil from being spilled on engine components.**

*Use only the specified engine oil. (Refer to "Recommended lubricants and capacities" in section 8.)*

G060200AEN-EU

## Changing the engine oil and filter

Have engine oil and filter changed by an authorized HYUNDAI dealer according to the Maintenance Schedule at the beginning of this section.

**⚠ CALIFORNIA PROPOSITION 65 WARNING**

**Engine oil contains chemicals known to the State of California to cause cancer, birth defects and reproductive harm. Used engine oil may cause irritation or cancer of the skin if left in contact with the skin for prolonged periods of time. Always protect your skin by washing your hands thoroughly with soap and warm water as soon as possible after handling used oil.**

## ENGINE COOLANT

G070000AUN

The high-pressure cooling system has a reservoir filled with year-round antifreeze coolant. The reservoir is filled at the factory.

Check the antifreeze protection and coolant level at least once a year, at the beginning of the winter season, and before traveling to a colder climate.

G070100AEN

### Checking the coolant level

**⚠ WARNING**

**Removing radiator cap**

- **Never attempt to remove the radiator cap while the engine is operating or hot. Doing so might lead to cooling system and engine damage and could result in serious personal injury from escaping hot coolant or steam.**
- **Turn the engine off and wait until it cools down. Use extreme care when removing the radiator cap. Wrap a thick towel around it, and turn it counterclockwise slowly to the first stop. Step back while the pressure is released from the cooling system. When you are sure all the pressure has been released, press down on the cap, using a thick towel, and continue turning counterclockwise to remove it.**

**(Continued)**

**(Continued)**

- **Even if the engine is not operating, do not remove the radiator cap or the drain plug while the engine and radiator are hot. Hot coolant and steam may still blow out under pressure, causing serious injury.**

**⚠ WARNING**

**The electric motor (cooling fan) is controlled by engine coolant temperature, refrigerant pressure and vehicle speed. It may sometimes operate even when the engine is not running. Use extreme caution when working near the blades of the cooling fan so that you are not injured by a rotating fan blades. As the engine coolant temperature decreases, the electric motor will automatically shut off. This is a normal condition. If your vehicle is equipped with GDI, the electric motor (cooling fan) may operate until you disconnect the negative battery cable.**

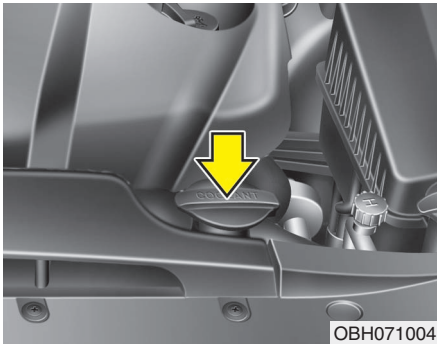

OBH071004

Check the condition and connections of all cooling system hoses and heater hoses. Replace any swollen or deteriorated hoses.

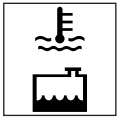

The coolant level should be filled between F and L marks on the side of the coolant reservoir when the engine is cool.

If the coolant level is low, add enough distilled (deionized) water. Bring the level to F, but do not overfill. If frequent additions are required, see an authorized HYUNDAI dealer for a cooling system inspection.

G070101AUN

### *Recommended engine coolant*

- When adding coolant, use only deionized water or soft water for your vehicle and never mix hard water in the coolant filled at the factory. An improper coolant mixture can result in serious malfunction or engine damage.
- The engine in your vehicle has aluminum engine parts and must be protected by an ethylene-glycol-based coolant to prevent corrosion and freezing.
- DO NOT USE alcohol or methanol coolant or mix them with the specified coolant.
- Do not use a solution that contains more than 60% antifreeze or less than 35% antifreeze, which would reduce the effectiveness of the solution.

For mixture percentage, refer to the following table.

| Ambient Temperature | Mixture Percentage (volume) | |
|---|---|---|
| | Antifreeze | Water |
| 5°F (-15°C) | 35 | 65 |
| -13°F (-25°C ) | 40 | 60 |
| -31°F (-35°C) | 50 | 50 |
| -49°F (-45°C) | 60 | 40 |

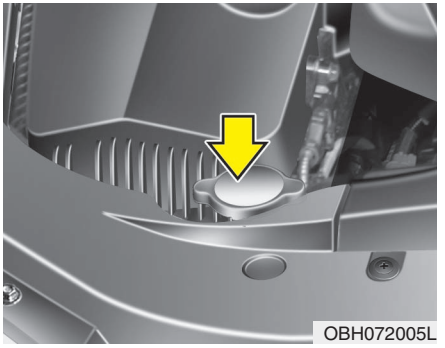
OBH072005L

**⚠ WARNING**

**Radiator cap**

**Do not remove the radiator cap when the engine and radiator are hot. Scalding hot coolant and steam may blow out under pressure causing serious injury.**

G070200AEN

## Changing the coolant

Have coolant changed by an authorized HYUNDAI dealer according to the Maintenance Schedule at the beginning of this section.

### ⚠ CAUTION

***Put a thick cloth around the radiator cap before refilling the coolant in order to prevent the coolant from overflowing into engine parts such as the generator.***

### ⚠ WARNING - Coolant

- **Do not use radiator coolant or antifreeze in the washer fluid reservoir.**
- **Radiator coolant can severely obscure visibility when sprayed on the windshield and may cause loss of vehicle control or damage to paint and body trim.**

## BRAKE FLUID

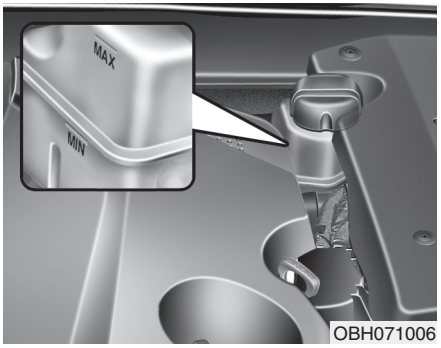


G080100AEN

### Checking the brake fluid level

Check the fluid level in the reservoir periodically. The fluid level should be between MAX and MIN marks on the side of the reservoir.

Before removing the reservoir cap and adding brake fluid, clean the area around the reservoir cap thoroughly to prevent brake fluid contamination.

If the level is low, add fluid to the MAX level. The level will fall with accumulated mileage. This is a normal condition associated with the wear of the brake linings. If the fluid level is excessively low, have the brake system checked by an authorized HYUNDAI dealer.

*Use only the specified brake fluid. (Refer to "Recommended lubricants or capacities" in section 8.)*

*Never mix different types of fluid.*

**⚠ WARNING - Loss of brake fluid**

**In the event the brake system requires frequent additions of fluid, the vehicle should be inspected by an authorized HYUNDAI dealer.**

**⚠ WARNING - Brake fluid**

**When changing and adding brake fluid, handle it carefully. Do not let it come in contact with your eyes. If brake fluid should come in contact with your eyes, immediately flush them with a large quantity of fresh tap water. Have your eyes examined by a doctor as soon as possible.**

**⚠ CAUTION**

***Do not allow brake fluid to contact the vehicle's body paint, as paint damage will result. Brake fluid, which has been exposed to open air for an extended time should never be used as its quality cannot be guaranteed. It should be disposed of properly. Don't put in the wrong kind of fluid. A few drops of mineral-based oil, such as engine oil, in your brake system can damage brake system parts.***

## POWER STEERING FLUID

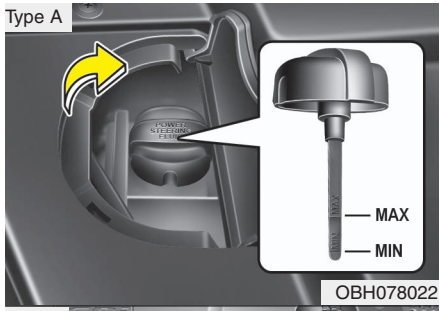


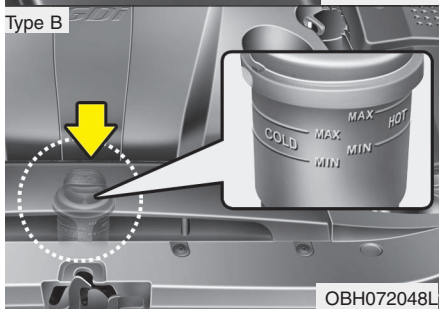


G090100ABH

### Checking the power steering fluid level

With the vehicle on level ground, check the fluid level in the power steering reservoir periodically. The fluid should be between MAX and MIN marks on the side of the gauge at the normal temperature.

Before adding power steering fluid, thoroughly clean the area around the reservoir cap to prevent power steering fluid contamination.

If the level is low, add fluid to the MAX level.

### ✻ NOTICE - (if equipped)

**Check that the fluid level is in the "HOT" range on the gauge. If the fluid is cold, check that it is in the "COLD" range (if equipped).**

In the event the power steering system requires frequent addition of fluid, the vehicle should be inspected by an authorized HYUNDAI dealer.

### ⚠ CAUTION

- ***To avoid damage to the power steering pump, do not operate the vehicle for prolonged periods with a low power steering fluid level.***
- ***Never start the engine when the reservoir tank is empty.***
- ***When adding fluid, be careful that dirt does not get into the tank.***
- ***Too little fluid can result in increased steering effort and/or noise from the power steering system.***
- ***The use of the non-specified fluid could reduce the effectiveness of the power steering system and cause damage to it.***

*Use only the specified power steering fluid. (Refer to "Recommended lubricants or capacities" in section 8.)*

G090200AEN

### Checking the power steering hose

Check the connections for oil leaks, damage and twists in the power steering hose before driving.

## WASHER FLUID

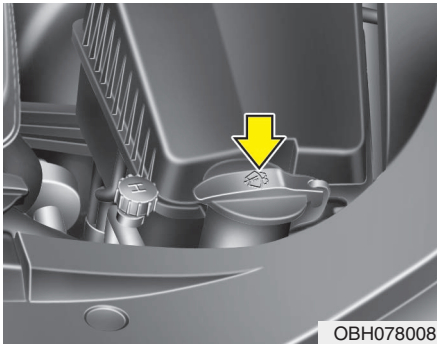


G120100AUN

### Checking the washer fluid level

The reservoir is translucent so that you can check the level with a quick visual inspection.

Check the fluid level in the washer fluid reservoir and add fluid if necessary. Plain water may be used if washer fluid is not available. However, use washer solvent with antifreeze characteristics in cold climates to prevent freezing.

**⚠ WARNING - Coolant**

- **Do not use radiator coolant or antifreeze in the washer fluid reservoir.**
- **Radiator coolant can severely obscure visibility when sprayed on the windshield and may cause loss of vehicle control or damage to paint and body trim.**
- **Windshield washer fluid agents contain some amounts of alcohol and can be flammable under certain circumstances. Do not allow sparks or flame to contact the washer fluid or the washer fluid reservoir. Damage to the vehicle or occupants could occur.**
- **Windshield washer fluid is poisonous to humans and animals. Do not drink and avoid contacting windshield washer fluid. Serious injury or death could occur.**

## FOOT PARKING BRAKE (IF EQUIPPED)

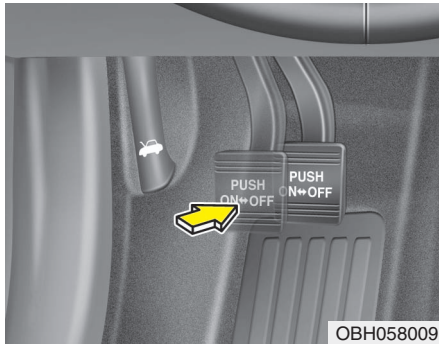

OBH058009

G140100ABH

### Checking the parking brake

Check whether the stroke is within specification when the parking brake pedal is depressed with 44 lb (20 kg, 196 N) of force. Also, the parking brake alone should securely hold the vehicle on a fairly steep grade. If the stroke is more or less than specified, have the parking brake adjusted by an authorized HYUNDAI dealer.

**Stroke : 3 notches (or 3 clicks)**

## AIR CLEANER

■ Main air cleaner

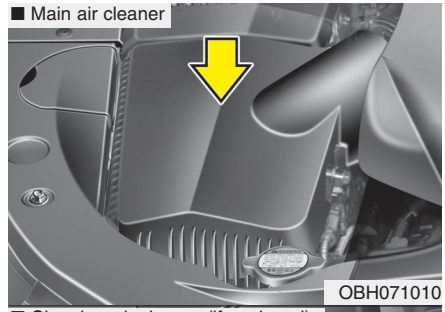
OBH071010

■ Chamber air cleaner (if equipped)

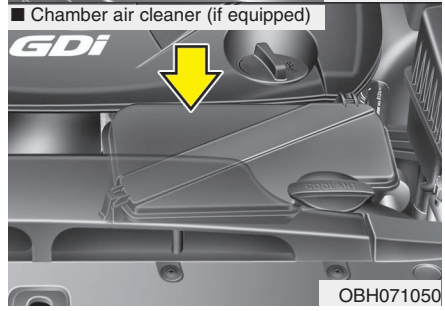

OBH071050

G160100ABH-EU

### Filter replacement

It must be replaced when necessary, and should not be cleaned and reused.

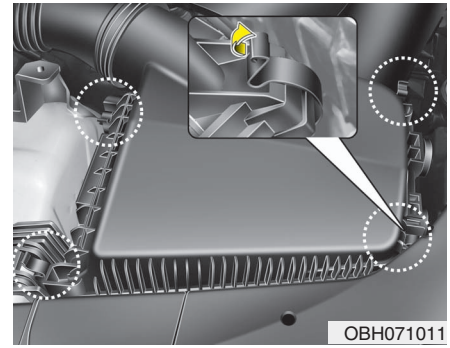
OBH071011

***Main air cleaner***

1. Loosen the air cleaner cover attaching clips and open the cover.

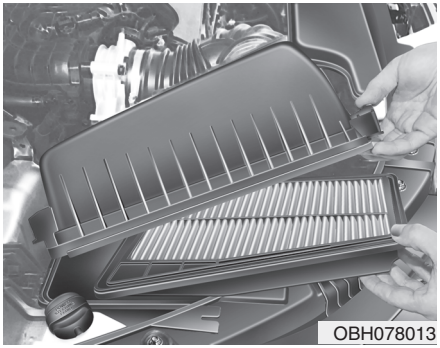


2. Replace the air cleaner filter.
3. Lock the cover with the cover attaching clips.

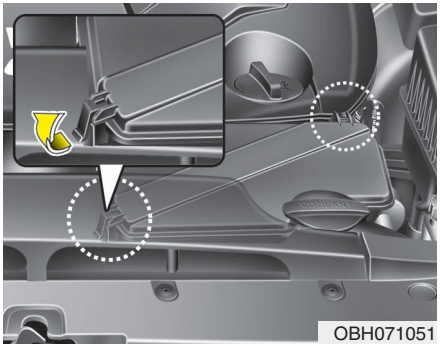


***Chamber air cleaner (if equipped)***

1. Loosen the air cleaner cover attaching clips and open the cover.

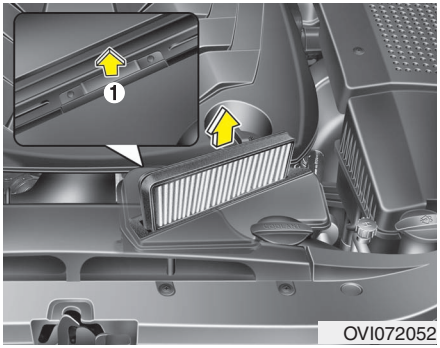


2. Replace the air cleaner filter after pulling up the locking tab (1).
3. Lock the cover with the cover attaching clips.

Replace the filter according to the Maintenance Schedule.

*If the vehicle is operated in extremely dusty or sandy areas, replace the element more often than the usual recommended intervals. (Refer to "Maintenance under severe usage conditions" in this section.)*

**⚠ CAUTION**

- ***Do not drive with the air cleaner removed; this will result in excessive engine wear.***
- ***When removing the air cleaner filter, be careful that dust or dirt does not enter the air intake, or damage may result.***
- ***Use a HYUNDAI genuine part. Use of non-genuine parts could damage the air flow sensor.***

## CLIMATE CONTROL AIR FILTER

G170100AEN

### Filter inspection

The climate control air filter should be replaced every 15,000 miles (24,000 km). If the vehicle is operated in severely air-polluted cities or on dusty rough roads for a long period, it should be inspected more frequently and replaced earlier. When you replace the climate control air filter, replace it performing the following procedure, and be careful to avoid damaging other components.

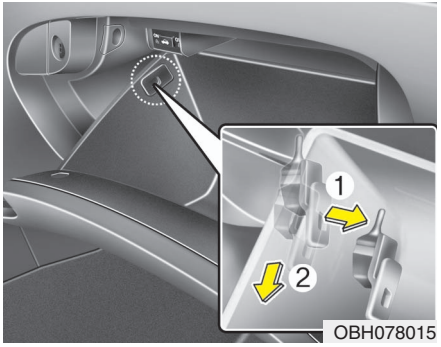

OBH078015

G170200ABH

### Filter replacement

1. With the glove box open, remove the stoppers on both sides to allow the glove box to hang freely on the hinges.

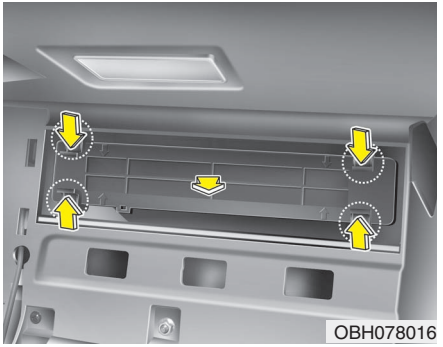
OBH078016

2. Remove the climate control air filter case pulling out both sides of the cover.

OBH078017

3. Replace the climate control air filter.
4. Reassemble in the reverse order of disassembly.

## ✻ NOTICE

**When replacing the climate control air filter install it properly. Otherwise, the system may produce noise and the effectiveness of the filter may be reduced.**

## WIPER BLADES

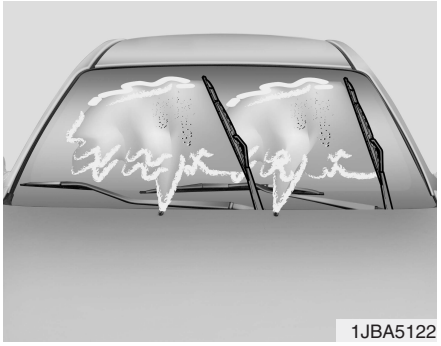
1JBA5122

G180100AUN

### Blade inspection

**✱ NOTICE**

**Commercial hot waxes applied by automatic car washes have been known to make the windshield difficult to clean.**

Contamination of either the windshield or the wiper blades with foreign matter can reduce the effectiveness of the windshield wipers. Common sources of contamination are insects, tree sap, and hot wax treatments used by some commercial car washes. If the blades are not wiping properly, clean both the window and the blades with a good cleaner or mild detergent, and rinse thoroughly with clean water.

**⚠ CAUTION**

***To prevent damage to the wiper blades, do not use gasoline, kerosene, paint thinner, or other solvents on or near them.***

G180200AUN

### Blade replacement

When the wipers no longer clean adequately, the blades may be worn or cracked, and require replacement.

**⚠ CAUTION**

***To prevent damage to the wiper arms or other components, do not attempt to move the wipers manually.***

**⚠ CAUTION**

***The use of a non-specified wiper blade could result in wiper malfunction and failure.***

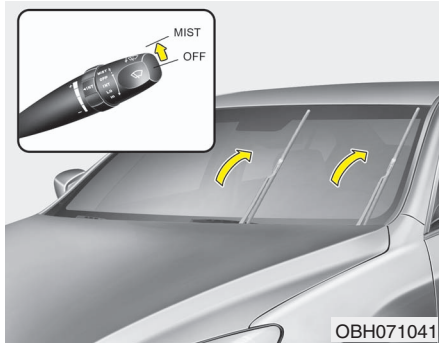


G180201ABH-EU

### *Front windshield wiper blade*

For your convenience, move the windshield wiper blades to the service position as follows;

1. Remove the key from the ignition switch or turn off the engine.
2. Move the wiper switch to the single wiping (MIST) position within 20 seconds and hold the switch until the wiper blade is in the fully up position.

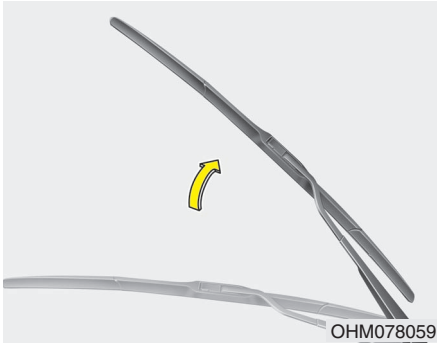


3. Raise the wiper arm.

**⚠ CAUTION**

***Do not allow the wiper arm to fall against the windshield, since it may chip or crack the windshield.***

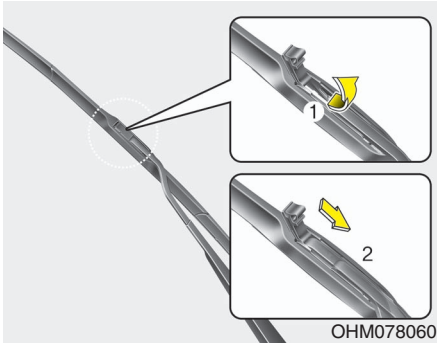


4. Open the cover of the blade. Press the clip behind the wiper arm and remove the blade assembly downward.

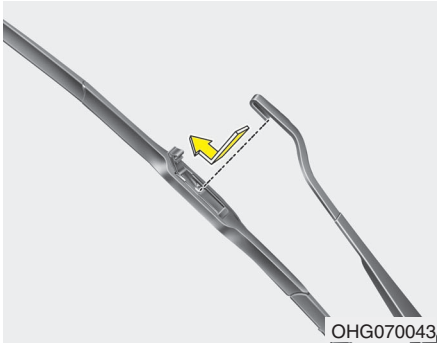


5. Install the new blade assembly in the reverse order of removal.
6. Return the wiper arm on the windshield.
7. Turn the ignition switch to the ON position.
8. Move the wiper switch to any position and then to the OFF position.

## BATTERY

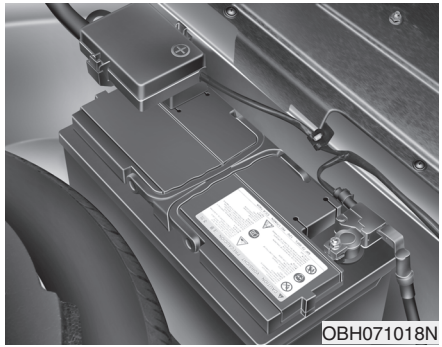


G190100BBH-EU

### For best battery service

The battery is in the trunk.

- Keep the battery securely mounted.
- Keep the battery top clean and dry.
- Keep the terminals and connections clean, tight, and coated with petroleum jelly or terminal grease.
- Rinse any spilled electrolyte from the battery immediately with a solution of water and baking soda.

**WARNING - Battery dangers**

**Always read the following instructions carefully when handling a battery.**

**Keep lighted cigarettes and all other flames or sparks away from the battery.**

**Hydrogen, a highly combustible gas, is always present in battery cells and may explode if ignited.**

**Keep batteries out of the reach of children because batteries contain highly corrosive SULFURIC ACID. Do not allow battery acid to contact your skin, eyes, clothing or paint finish.**

**If any electrolyte gets into your eyes, flush your eyes with clean water for at least 15 minutes and get immediate medical attention.**

**(Continued)**

**(Continued)**

**If electrolyte gets on your skin, thoroughly wash the contacted area. If you feel a pain or a burning sensation, get medical attention immediately.**

**Wear eye protection when charging or working near a battery. Always provide ventilation when working in an enclosed space.**

**An inappropriately disposed battery can be harmful to the environment and human health. Dispose the battery according to your local law(s) or regulation.**

- **When lifting a plastic-cased battery, excessive pressure on the case may cause battery acid to leak, resulting in personal injury. Lift with a battery carrier or with your hands on opposite corners.**
- **Never attempt to recharge the battery when the battery cables are connected.**

**(Continued)**

**(Continued)**

- **The electrical ignition system works with high voltage. Never touch these components with the engine running or the ignition switched on.**

**Failure to follow the above warnings can result in serious bodily injury or death.**

**⚠ CALIFORNIA PROPOSITION 65 WARNING**

**Battery posts, terminals, and related accessories contain lead and lead compounds, chemicals known to the State of California to cause cancer, birth defects and reproductive harm. Batteries also contain other chemicals known to the State of California to cause cancer. Wash hands after handling.**

**⚠ CAUTION**

- ***When you don't use the vehicle for a long time in a low temperature area, disconnect the battery and keep it indoors.***
- ***Always charge the battery fully to prevent the battery case from being damaged in a low temperature area.***
- ***If you connect unauthorized electronic devices to the battery, the battery may be discharged. Never use unauthorized devices.***

G190200ABH

## Battery recharging by battery charger

Your vehicle has a maintenance-free, calcium-based battery.

- If the battery becomes discharged in a short time (because, for example, the headlights or interior lights were left on while the vehicle was not in use), recharge it by slow charging (trickle) for 10 hours.
- If the battery gradually discharges because of high electric load while the vehicle is being used, recharge it at 20-30A for two hours.

## Battery recharging by vehicle

After a jump start from a good battery, run the engine for 20-30 minutes at idle or driving the vehicle before it is shutoff. Vehicle may not restart if you shut it off before the battery had chance to adequately recharge.

**⚠ WARNING - Recharging battery**

**When recharging the battery, observe the following precautions:**

- **The battery must be removed from the vehicle and placed in an area with good ventilation.**
- **Do not allow cigarettes, sparks, or flame near the battery.**
- **Watch the battery during charging, and stop or reduce the charging rate if the battery cells begin gassing (boiling) violently or if the temperature of the electrolyte of any cell exceeds 120°F (49°C).**
- **Wear eye protection when checking the battery during charging.**
- **Disconnect the battery charger in the following order.**

1. **Turn off the battery charger main switch.**
2. **Unhook the negative clamp from the negative battery terminal.**
3. **Unhook the positive clamp from the positive battery terminal.**

**⚠ WARNING**

- **Before performing maintenance or recharging the battery, turn off all accessories and stop the engine.**
- **The negative battery cable must be removed first and installed last when the battery is disconnected.**
- **Operation related to the battery should be done at an authorized HYUNDAI dealer.**

**⚠ CAUTION**

- ***Keep the battery away from water or any liquid.***
- ***The battery is in the trunk, so you should be careful when you load a container filled with liquid into the trunk.***
- ***For your safety, use a genuine HYUNDAI approved battery when you replace the battery.***

G190300ABH

## Reset items

Items should be reset after the battery has been discharged or the battery has been disconnected.

- Auto up/down window (See section 4)
- Sunroof (See section 4)
- Driver position memory system (See section 4)
- Trip computer (See section 4)
- Climate control system (See section 4)
- Clock (See section 4)
- Audio (See section 4)

## TIRES AND WHEELS

G200100AUN

### Tire care

For proper maintenance, safety, and maximum fuel economy, you must always maintain recommended tire inflation pressures and stay within the load limits and weight distribution recommended for your vehicle.

G200200AEN-EU

### Recommended cold tire inflation pressures

All tire pressures (including the spare) should be checked when the tires are cold. “Cold Tires” means the vehicle has not been driven for at least three hours or driven less than one mile (1.6 km).

Recommended pressures must be maintained for the best ride, vehicle handling, and minimum tire wear.

For recommended inflation pressure, refer to “Tire and wheels” in section 8.

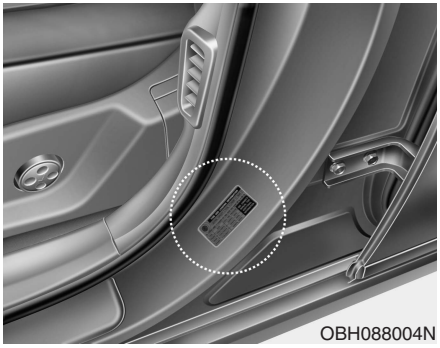
OBH088004N

All specifications (sizes and pressures) can be found on a label attached to the driver’s side center pillar.

**⚠ WARNING - Tire underinflation**

**Severe underinflation can lead to severe heat build-up, causing blowouts, tread separation and other tire failures that can result in the loss of vehicle control leading to severe injury or death. This risk is much higher on hot days and when driving for long periods at high speeds.**

**⚠ CAUTION**

- ***Underinflation also results in excessive wear, poor handling and reduced fuel economy. Wheel deformation also is possible. Keep your tire pressures at the proper levels. If a tire frequently needs refilling, have it checked by an authorized HYUNDAI dealer.***
- ***Overinflation produces a harsh ride, excessive wear at the center of the tire tread, and a greater possibility of damage from road hazards.***

⚠ **CAUTION**

- ***Warm tires normally exceed recommended cold tire pressures by 4 to 6 psi (28 to 41 kPa). Do not release air from warm tires to adjust the pressure or the tires will be underinflated.***
- ***Be sure to reinstall the tire inflation valve caps. Without the valve cap, dirt or moisture could get into the valve core and cause air leakage. If a valve cap is missing, install a new one as soon as possible.***

⚠ **WARNING - Tire Inflation**

**Overinflation or underinflation can reduce tire life, adversely affect vehicle handling, and lead to sudden tire failure. This could result in loss of vehicle control and potential injury.**

⚠ **CAUTION - Tire pressure**

***Always observe the following:***

- ***Check tire pressure when the tires are cold. (After vehicle has been parked for at least three hours or hasn't been driven more than one mile (1.6 km) since startup.)***
- ***Check the pressure of your spare tire each time you check the pressure of other tires.***
- ***Never overload your vehicle. Be careful not to overload a vehicle luggage rack if your vehicle is equipped with one.***
- ***Worn, old tires can cause accidents. If your tread is badly worn, or if your tires have been damaged, replace them.***

G200300AUN

## Checking tire inflation pressure

Check your tires once a month or more.

Also, check the tire pressure of the spare tire.

G200301AEN

### *How to check*

Use a good quality gage to check tire pressure. You can not tell if your tires are properly inflated simply by looking at them. Radial tires may look properly inflated even when they're underinflated.

Check the tire's inflation pressure when the tires are cold. - "Cold" means your vehicle has been sitting for at least three hours or driven no more than 1 mile (1.6 km).

Remove the valve cap from the tire valve stem. Press the tire gage firmly onto the valve to get a pressure measurement. If the cold tire inflation pressure matches the recommended pressure on the tire and loading information label, no further adjustment is necessary. If the pressure is low, add air until you reach the recommended amount.

If you overfill the tire, release air by pushing on the metal stem in the center of the tire valve. Recheck the tire pressure with the tire gage. Be sure to put the valve caps back on the valve stems. They help prevent leaks by keeping out dirt and moisture.

**⚠ WARNING**

- **Inspect your tires frequently for proper inflation as well as wear and damage. Always use a tire pressure gauge.**
- **Tires with too much or too little pressure wear unevenly causing poor handling, loss of vehicle control, and sudden tire failure leading to accidents, injuries, and even death. The recommended cold tire pressure for your vehicle can be found in this manual and on the tire label located on the driver's side center pillar.**
- **Worn tires can cause accidents. Replace tires that are worn, show uneven wear, or are damaged.**
- **Remember to check the pressure of your spare tire. HYUNDAI recommends that you check the spare every time you check the pressure of the other tires on your vehicle.**

G200400ABH

## Tire rotation

To equalize tread wear, it is recommended that the tires be rotated every 7,500 miles (12,000 km) or sooner if irregular wear develops.

During rotation, check the tires for correct balance.

When rotating tires, check for uneven wear and damage. Abnormal wear is usually caused by incorrect tire pressure, improper wheel alignment, out-of-balance wheels, severe braking or severe cornering. Look for bumps or bulges in the tread or side of tire. Replace the tire if you find either of these conditions. Replace the tire if fabric or cord is visible. After rotation, be sure to bring the front and rear tire pressures to specification and check lug nut tightness.

Without a spare tire

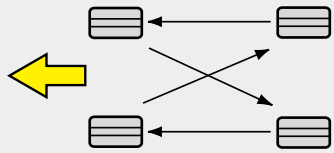

OBH078040

*Disc brake pads should be inspected for wear whenever tires are rotated.*

### ✻ NOTICE

**Rotate radial tires that have an asymmetric tread pattern only from front to rear and not from right to left.**

### ⚠ WARNING

- **Do not use the compact spare tire for tire rotation.**
- **Do not mix bias ply and radial ply tires under any circumstances. This may cause unusual handling characteristics that could result in death, severe injury, or property damage.**

G200500AUN

## Wheel alignment and tire balance

The wheels on your vehicle were aligned and balanced carefully at the factory to give you the longest tire life and best overall performance.

In most cases, you will not need to have your wheels aligned again. However, if you notice unusual tire wear or your vehicle pulling one way or the other, the alignment may need to be reset.

If you notice your vehicle vibrating when driving on a smooth road, your wheels may need to be rebalanced.

### ⚠ CAUTION

***Improper wheel weights can damage your vehicle's aluminum wheels. Use only approved wheel weights.***

G200600ABH

### Tire replacement

If the tire is worn evenly, a tread wear indicator will appear as a solid band across the tread. This shows there is less than 1/16 inch (1.6 mm) of tread left on the tire. Replace the tire when this happens.

Do not wait for the band to appear across the entire tread before replacing the tire.

**⚠ WARNING - Replacing tires**

**To reduce the chance of serious or fatal injuries from an accident caused by tire failure or loss of vehicle control:**

- **Replace tires that are worn, show uneven wear, or are damaged. Worn tires can cause loss of braking effectiveness, steering control, and traction.**
- **Do not drive your vehicle with too little or too much pressure in your tires. This can lead to uneven wear and tire failure.**
- **When replacing tires, never mix radial and bias-ply tires on the same car. You must replace all tires (including the spare) if moving from radial to bias-ply tires.**

**(Continued)**

**(Continued)**

- **Using tires and wheels other than the recommended sizes could cause unusual handling characteristics and poor vehicle control, resulting in a serious accident.**
- **Wheels that do not meet HYUNDAI's specifications may fit poorly and result in damage to the vehicle or unusual handling and poor vehicle control.**
- **The ABS works by comparing the speed of the wheels. Tire size can affect wheel speed. When replacing tires, all 4 tires must use the same size originally supplied with the vehicle. Using tires of a different size can cause the ABS (Anti-lock Brake System) and ESC (Electronic Stability Control) to work irregularly.**

G200601AUN

### *Compact spare tire replacement*

A compact spare tire has a shorter tread life than a regular size tire. Replace it when you can see the tread wear indicator bars on the tire. The replacement compact spare tire should be the same size and design tire as the one provided with your new vehicle and should be mounted on the same compact spare tire wheel. The compact spare tire is not designed to be mounted on a regular size wheel, and the compact spare tire wheel is not designed for mounting a regular size tire.

G200700ABH

## Wheel replacement

When replacing the metal wheels for any reason, make sure the new wheels are equivalent to the original factory units in diameter, rim width and offset.

**⚠ WARNING**

**A wheel that is not the correct size may adversely affect wheel and bearing life, braking and stopping abilities, handling characteristics, ground clearance, body-to-tire clearance, snow chain clearance, speedometer and odometer calibration, headlight aim and bumper height.**

G200800AUN

## Tire traction

Tire traction can be reduced if you drive on worn tires, tires that are improperly inflated or on slippery road surfaces. Tires should be replaced when tread wear indicators appear. To reduce the possibility of losing control, slow down whenever there is rain, snow or ice on the road.

G200900AUN

## Tire maintenance

In addition to proper inflation, correct wheel alignment helps to decrease tire wear. If you find a tire is worn unevenly, have your dealer check the wheel alignment.

When you have new tires installed, make sure they are balanced. This will increase vehicle ride comfort and tire life. Additionally, a tire should always be rebalanced if it is removed from the wheel.

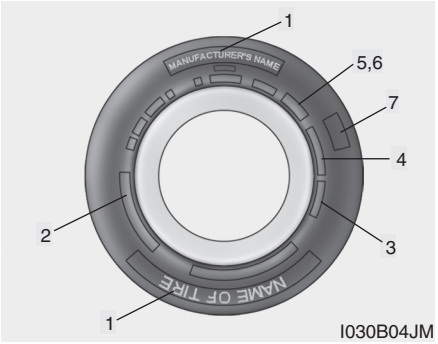


G201000AUN

## Tire sidewall labeling

This information identifies and describes the fundamental characteristics of the tire and also provides the tire identification number (TIN) for safety standard certification. The TIN can be used to identify the tire in case of a recall.

G201001AUN

***1. Manufacturer or brand name***

Manufacturer or Brand name is shown.

G201002AEN

***2. Tire size designation***

A tire's sidewall is marked with a tire size designation. You will need this information when selecting replacement tires for your car. The following explains what the letters and numbers in the tire size designation mean.

Example tire size designation:

(These numbers are provided as an example only; your tire size designator could vary depending on your vehicle.)

**P225/55R17 95H**

P - Applicable vehicle type (tires marked with the prefix "P" are intended for use on passenger cars or light trucks; however, not all tires have this marking).

225 - Tire width in millimeters.

55 - Aspect ratio. The tire's section height as a percentage of its width.

R - Tire construction code (Radial).

17 - Rim diameter in inches.

95 - Load Index, a numerical code associated with the maximum load the tire can carry.

H - Speed Rating Symbol. See the speed rating chart in this section for additional information.

### Wheel size designation

Wheels are also marked with important information that you need if you ever have to replace one. The following explains what the letters and numbers in the wheel size designation mean.

Example wheel size designation:

**6.5JX17**

6.5 - Rim width in inches.

J - Rim contour designation.

17 - Rim diameter in inches.

**Tire speed ratings**

The chart below lists many of the different speed ratings currently being used for passenger car tires. The speed rating is part of the tire size designation on the sidewall of the tire. This symbol corresponds to that tire's designed maximum safe operating speed.

| Speed Rating Symbol | Maximum Speed |
|---|---|
| S | 112 mph (180 km/h) |
| T | 118 mph (190 km/h) |
| H | 130 mph (210 km/h) |
| V | 149 mph (240 km/h) |
| Z | Above 149 mph (240 km/h) |

G201003AEN

***3. Checking tire life (TIN : Tire Identification Number)***

Any tires that are over 6 years old, based on the manufacturing date, (including the spare tire) should be replaced by new ones. You can find the manufacturing date on the tire sidewall (possibly on the inside of the wheel), displaying the DOT Code. The DOT Code is a series of numbers on a tire consisting of numbers and English letters. The manufacturing date is designated by the last four digits (characters) of the DOT code.

**DOT : XXXX XXXX OOOO**

The front part of the DOT means a plant code number, tire size and tread pattern and the last four numbers indicate week and year manufactured.

For example:

DOT XXXX XXXX 1611 represents that the tire was produced in the 16th week of 2011.

**⚠ WARNING - Tire age**

**Tires degrade over time, even when they are not being used.**

**Regardless of the remaining tread, it is recommended that tires generally be replaced after six (6) years of normal service. Heat caused by hot climates or frequent high loading conditions can accelerate the aging process. Failure to follow this warning can result in sudden tire failure, which could lead to a loss of control and an accident involving serious injury or death.**

G201004AEN

***4. Tire ply composition and material***

The number of layers or plies of rubber-coated fabric in the tire. Tire manufacturers also must indicate the materials in the tire, which include steel, nylon, polyester, and others. The letter "R" means radial ply construction; the letter "D" means diagonal or bias ply construction; and the letter "B" means belted-bias ply construction.

G201005AUN

***5. Maximum permissible inflation pressure***

This number is the greatest amount of air pressure that should be put in the tire. Do not exceed the maximum permissible inflation pressure. Refer to the Tire and Loading Information label for recommended inflation pressure.

G201006AUN

***6. Maximum load rating***

This number indicates the maximum load in kilograms and pounds that can be carried by the tire. When replacing the tires on the vehicle, always use a tire that has the same load rating as the factory installed tire.

G2010007AEN-EU

***7. Uniform tire quality grading***

Quality grades can be found where applicable on the tire sidewall between tread shoulder and maximum section width.

For example: TREAD wear 200

TRACTION AA

TEMPERATURE A

**Tread wear**

The tread wear grade is a comparative rating based on the wear rate of the tire when tested under controlled conditions on a specified government test course. For example, a tire graded 150 would wear one-and-a-half times (1½) as well on the government course as a tire graded 100.

The relative performance of tires depends upon the actual conditions of their use, however, and may depart significantly from the norm due to variations in driving habits, service practices and differences in road characteristics and climate.

These grades are molded on the side-walls of passenger vehicle tires. The tires available as standard or optional equipment on your vehicle may vary with respect to grade.

**Traction - AA, A, B & C**

The traction grades, from highest to lowest, are AA, A, B and C. Those grades represent the tire's ability to stop on wet pavement as measured under controlled conditions on specified government test surfaces of asphalt and concrete. A tire marked C may have poor traction performance.

**⚠ WARNING**

**The traction grade assigned to this tire is based on straight-ahead braking traction tests, and does not include acceleration, cornering, hydroplaning, or peak traction characteristics.**

**Temperature -A, B & C**

The temperature grades are A (the highest), B and C representing the tire's resistance to the generation of heat and its ability to dissipate heat when tested under controlled conditions on a specified indoor laboratory test wheel.

Sustained high temperature can cause the material of the tire to degenerate and reduce tire life, and excessive temperature can lead to sudden tire failure. The grade C corresponds to a level of performance which all passenger car tires must meet under the Federal Motor Vehicle Safety Standard No. 109. Grades B and A represent higher levels of performance on the laboratory test wheel than the minimum required by law.

**⚠ WARNING - Tire temperature**

**The temperature grade for this tire is established for a tire that is properly inflated and not overloaded. Excessive speed, underinflation, or excessive loading, either separately or in combination, can cause heat build-up and possible sudden tire failure. This can cause loss of vehicle control and serious injury or death.**

G201100ABH

## Tire terminology and definitions

**Air Pressure**: The amount of air inside the tire pressing outward on the tire. Air pressure is expressed in pounds per square inch (psi) or kilopascal (kPa).

**Accessory Weight**: This means the combined weight of optional accessories. Some examples of optional accessories are, automatic transmission, power seats, and air conditioning.

**Aspect Ratio**: The relationship of a tire's height to its width.

**Belt:** A rubber coated layer of cords that is located between the plies and the tread. Cords may be made from steel or other reinforcing materials.

**Bead**: The tire bead contains steel wires wrapped by steel cords that hold the tire onto the rim.

**Bias Ply Tire**: A pneumatic tire in which the plies are laid at alternate angles less than 90 degrees to the centerline of the tread.

**Cold Tire Pressure**: The amount of air pressure in a tire, measured in pounds per square inch (psi) or kilopascals (kPa) before a tire has built up heat from driving.

**Curb Weight**: This means the weight of a motor vehicle with standard and optional equipment including the maximum capacity of fuel, oil and coolant, but without passengers and cargo.

**DOT Markings**: A code molded into the sidewall of a tire signifying that the tire is in compliance with the U.S. Department of Transportation motor vehicle safety standards. The DOT code includes the Tire Identification Number (TIN), an alphanumeric designator which can also identify the tire manufacturer, production plant, brand and date of production.

**GVWR**: Gross Vehicle Weight Rating

**GAWR FRT**: Gross Axle Weight Rating for the Front Axle.

**GAWR RR**: Gross Axle Weight Rating for the Rear axle.

**Intended Outboard Sidewall**: The side of an asymmetrical tire, that must always face outward when mounted on a vehicle.

**Kilopascal (kPa)**: The metric unit for air pressure.

**Load Index**: An assigned number ranging from 1 to 279 that corresponds to the load carrying capacity of a tire.

**Maximum Inflation Pressure**: The maximum air pressure to which a cold tire may be inflated. The maximum air pressure is molded onto the sidewall.

**Maximum Load Rating**: The load rating for a tire at the maximum permissible inflation pressure for that tire.

**Maximum Loaded Vehicle Weight**: The sum of curb weight; accessory weight; vehicle capacity weight; and production options weight.

**Normal Occupant Weight**: The number of occupants a vehicle is designed to seat multiplied by 150 pounds (68 kg).

**Occupant Distribution**: Designated seating positions.

**Outward Facing Sidewall:** The side of a asymmetrical tire that has a particular side that faces outward when mounted on a vehicle. The outward facing sidewall bears white lettering or bears manufacturer, brand, and/or model name molding that is higher or deeper than the same moldings on the inner facing sidewall.

**Passenger (P-Metric) Tire**: A tire used on passenger cars and some light duty trucks and multipurpose vehicles.

**Recommended Inflation Pressure**: Vehicle manufacturer's recommended tire inflation pressure and shown on the tire placard.

**Radial Ply Tire**: A pneumatic tire in which the ply cords that extend to the beads are laid at 90 degrees to the centerline of the tread.

**Rim**: A metal support for a tire and upon which the tire beads are seated.

**Sidewall**: The portion of a tire between the tread and the bead.

**Speed Rating**: An alphanumeric code assigned to a tire indicating the maximum speed at which a tire can operate.

**Traction**: The friction between the tire and the road surface. The amount of grip provided.

**Tread**: The portion of a tire that comes into contact with the road.

**Treadwear Indicators**: Narrow bands, sometimes called "wear bars," that show across the tread of a tire when only 2/32 inch of tread remains.

**UTQGS**: Uniform Tire Quality Grading Standards, a tire information system that provides consumers with ratings for a tire's traction, temperature and treadwear. Ratings are determined by tire manufacturers using government testing procedures. The ratings are molded into the sidewall of the tire.

**Vehicle Capacity Weight**: The number of designated seating positions multiplied by 150 lbs. (68 kg) plus the rated cargo and luggage load.

**Vehicle Maximum Load on the Tire**: Load on an individual tire due to curb and accessory weight plus maximum occupant and cargo weight.

**Vehicle Normal Load on the Tire**: Load on an individual tire that is determined by distributing to each axle its share of the curb weight, accessory weight, and normal occupant weight and dividing by 2.

**Vehicle Placard**: A label permanently attached to a vehicle showing the original equipment tire size and recommended inflation pressure.

### All season tires

HYUNDAI specifies all season tires on some models to provide good performance for use all year round, including snowy and icy road conditions. All season tires are identified by ALL SEASON and/or M+S (Mud and Snow) on the tire sidewall. Snow tires have better snow traction than all season tires and may be more appropriate in some areas.

### Summer tires

HYUNDAI specifies summer tires on some models to provide superior performance on dry roads. Summer tire performance is substantially reduced in snow and ice. Summer tires do not have the tire traction rating M+S (Mud and Snow) on the tire side wall. If you plan to operate your vehicle in snowy or icy conditions, HYUNDAI recommends the use of snow tires or all season tires on all four wheels.

### Snow tires

If you equip your car with snow tires, they should be the same size and have the same load capacity as the original tires. Snow tires should be installed on all four wheels; otherwise, poor handling may result.

Snow tires should carry 4 psi (28 kPa) more air pressure than the pressure recommended for the standard tires on the tire label on the driver's side of the center pillar, or up to the maximum pressure shown on the tire sidewall, whichever is less.

Do not drive faster than 75 mph (120 km/h) when your car is equipped with snow tires.

### Tire chains

Tire chains, if necessary, should be installed on the drive wheels (rear wheels).

Be sure that the chains are installed in accordance with the manufacturer's instructions.

To minimize tire and chain wear, do not continue to use tire chains when they are no longer needed.

**⚠ WARNING - Snow or ice**

- **When driving on roads covered with snow or ice, drive at less than 20 mph (30 km/h).**
- **Use the SAE "S" class or wire chains.**
- **If you hear noise caused by chains contacting the body, retighten the chain to avoid contact with the vehicle body.**
- **To prevent body damage, retighten the chains after driving 0.3~0.6 miles (0.5~1.0 km).**
- **Do not use tire chains on vehicles equipped with aluminum wheels. In unavoidable circumstance, use a wire type chain.**
- **Use wire chains less than 0.47 inches (12 mm) to prevent damage to the chain's connection.**

### Radial-ply tires

Radial-ply tires provide improved tread life, road hazard resistance and smoother high speed ride. The radial-ply tires used on this vehicle are of belted construction, and are selected to complement the ride and handling characteristics of your vehicle. Radial-ply tires have the same load carrying capacity, as bias-ply or bias belted tires of the same size, and use the same recommended inflation pressure. Mixing of radial-ply tires with bias-ply or bias belted tires is not recommended. Any combinations of radial-ply and bias-ply or bias belted tires when used on the same vehicle will seriously deteriorate vehicle handling. The best rule to follow is: Identical radial-ply tires should always be used as a set of four.

Longer wearing tires can be more susceptible to irregular tread wear. It is very important to follow the tire rotation interval shown in this section to achieve the tread life potential of these tires. Cuts and punctures in radial-ply tires are repairable only in the tread area, because of sidewall flexing. Consult your tire dealer for radial-ply tire repairs.

## FUSES

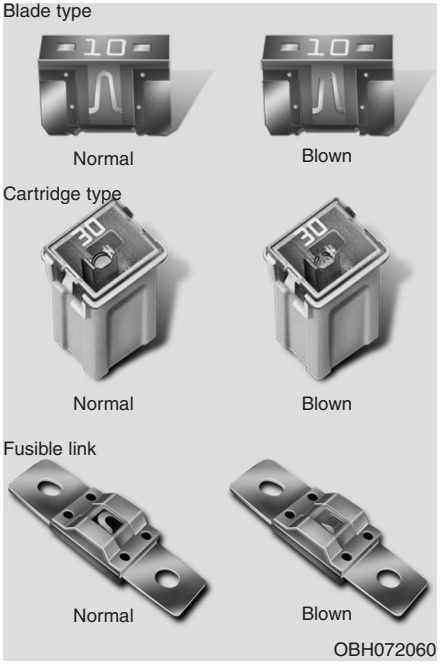


G210000ABH-EU

A vehicle's electrical system is protected from electrical overload damage by fuses.

This vehicle has 4 fuse panels, two located in the driver's side and passenger's side panel bolster, the others are in the engine compartment.

If any of your vehicle's lights, accessories, or controls do not work, check the appropriate circuit fuse. If a fuse has blown, the element inside the fuse will be melted.

If the electrical system does not work, first check the driver's side fuse panel.

Always replace a blown fuse with one of the same rating.

If the replacement fuse blows, this indicates an electrical problem. Avoid using the system involved and immediately consult an authorized HYUNDAI dealer.

*Three kinds of fuses are used: blade type for lower amperage rating, cartridge type, and fusible link for higher amperage ratings.*

**⚠ WARNING - Fuse replacement**

- **Never replace a fuse with anything but another fuse of the same rating.**
- **A higher capacity fuse could cause damage and possibly a fire.**
- **Never install a wire or aluminum foil instead of the proper fuse - even as a temporary repair. It may cause extensive wiring damage and a possible fire.**

**⚠ CAUTION**

***Do not use a screwdriver or any other metal object to remove fuses because it may cause a short circuit and damage the system.***

Driver's side

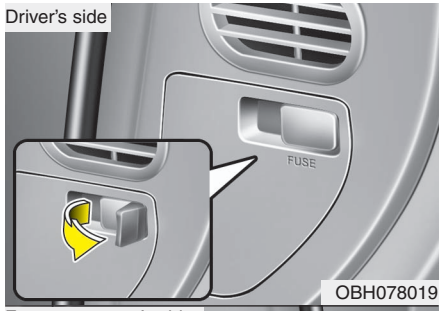


OBH078019

Front passenger's side

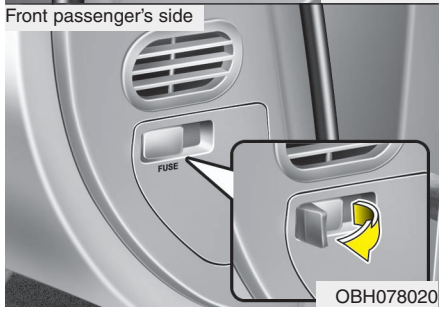


OBH078020

G210100ABH

## Inner panel fuse replacement

1. Turn the ignition switch and all other switches off.
2. Open the fuse panel cover.

Front passenger's side

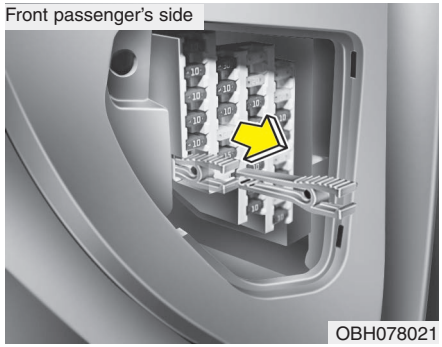

OBH078021

3. Pull the suspected fuse straight out. Use the removal tool provided in the front passenger's side panel.
4. Check the removed fuse; replace it if it is blown.

   *Spare fuses are provided in the passenger compartment panel fuse panels (or in the engine compartment fuse panel).*
5. Push in a new fuse of the same rating, and make sure it fits tightly in the clips.

If it fits loosely, consult an authorized HYUNDAI dealer.

*If you do not have a spare, use a fuse of the same rating from a circuit you may not need for operating the vehicle, such as the cigarette lighter fuse.*

If the headlights or other electrical components do not work and the fuses are OK, check the fuse panel in the engine compartment. If a fuse is blown, it must be replaced.

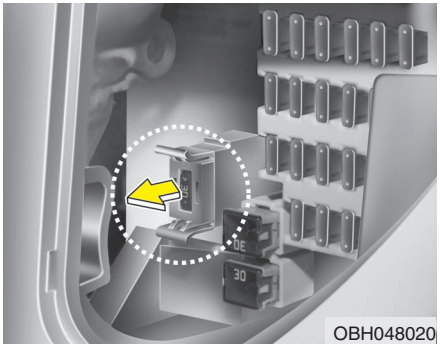


G210101AUN

***Memory fuse***

Your vehicle is equipped with a memory fuse to prevent battery discharge if your vehicle is parked without being operated for prolonged periods. Use the following procedures before parking the vehicle for prolonged periods.

1. Turn off the engine.
2. Turn off the headlights and tail lights.
3. Open the driver's side panel cover and pull up the memory fuse.

## ✻ NOTICE

- **If the memory fuse is pulled up from the fuse panel, the warning chime, audio, clock and interior lamps, etc., will not operate. Some items must be reset after replacement. Refer to "Battery" in this section.**
- **Even when the memory fuse is pulled up, the battery can still be discharged by operation of the headlights or other electrical devices.**

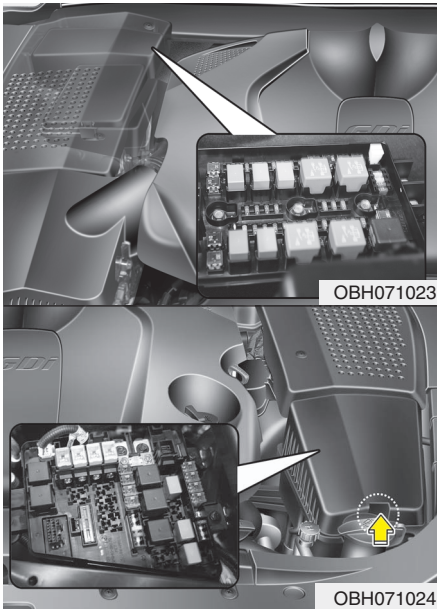


G210200AEN

### Engine compartment fuse replacement

1. Turn the ignition switch and all other switches off.
2. Remove the fuse panel cover by pressing the tab and pulling up.

3. Check the removed fuse; replace it if it is blown. To remove or insert the fuse, use the fuse puller in the front passenger's side panel.
4. Push in a new fuse of the same rating, and make sure it fits tightly in the clips. If it fits loosely, consult an authorized HYUNDAI dealer.

### ⚠ CAUTION

***After checking the fuse panel in the engine compartment, securely install the fuse panel cover. If not, electrical failures may occur from water contact.***

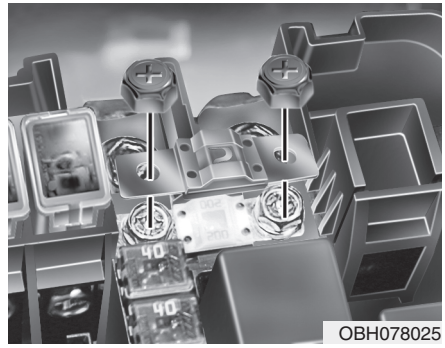


G210201ABH

### *Main fuse*

If the main fuse is blown, it must be removed as follows:

1. Remove the fuse panel cover on the right side in the engine compartment.
2. Remove the nuts shown in the picture above.
3. Replace the fuse with a new one of the same rating.
4. Reinstall in the reverse order of removal.

### ✻ NOTICE

**If the main fuse is blown, consult an authorized HYUNDAI dealer.**

G210300ABH-EU

## Fuse/relay panel description

Inside the fuse/relay panel covers, you can find the fuse/relay label describing fuse/relay name and capacity.

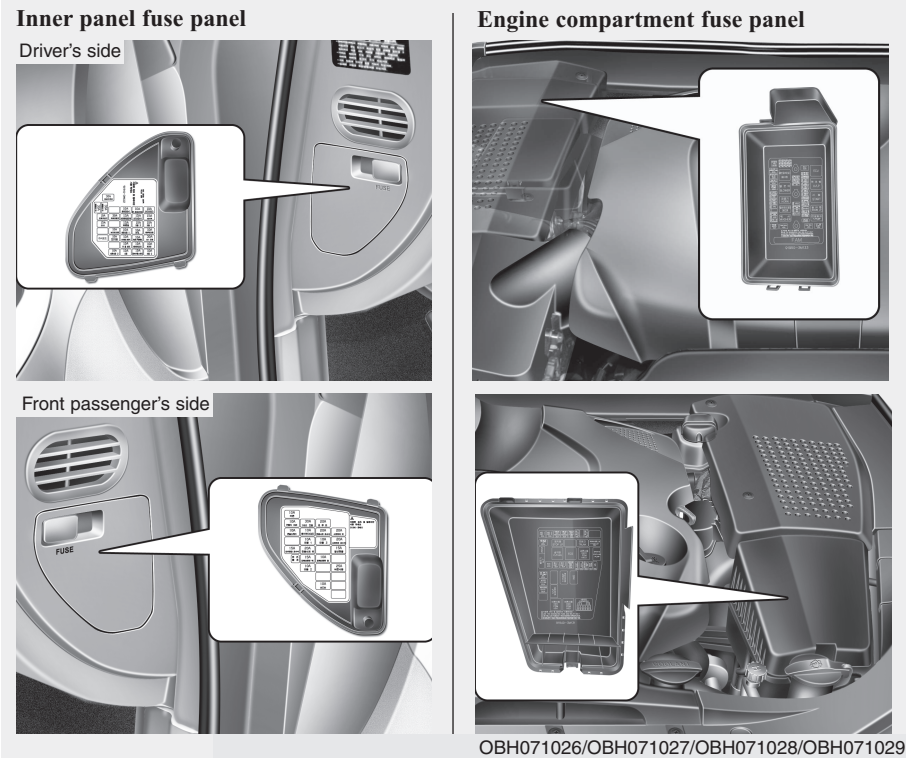


OBH071026/OBH071027/OBH071028/OBH071029

### ✻ NOTICE

**Not all fuse panel descriptions in this manual may be applicable to your vehicle. It is accurate at the time of printing. When you inspect the fuse panel in your vehicle, refer to the fuse panel label.**

**Instrument panel (Driver's side fuse panel)**

| Description | Fuse rating | Protected component |
|---|---|---|
| P/WDW(LH) | 30A | Driver Power Window Module, Rear Power Window Module LH |
| P/WDW(RH) | 30A | Passenger Power Window Module, Rear Power Window Module RH |
| MODULE 2 | 10A | Console Switch LH/RH, ECS Control Module, Steering Angle Sensor, Key Lock Module,Tire Pressure Monitoring Module |
| CURISE SW | 10A | Multifunction Switch, Crash Pad Switch, A/C Control Module, Instrument Cluster, Rear Seat Warmer Module LH, Driver Seat Warmer Module Rear Seat Warmer Module RH, Passenger Seat Warmer Module, Passenger CCS Control Module, Driver CCS Control Module, Generator |
| START | 10A | Transmission Range Switch |
| PDM 2 | 10A | Fob Holder, Start Stop Button Switch |
| CLUSTER | 10A | Instrument Cluster (IND.) |
| A/CON(IG1) | 10A | A/C Control Module |
| KEY ILLUMINATION | 10A | Start Stop Button Switch, Door Warning Switch, Fob Holder, Key Solenoid |
| IG KEY SUPPLY | 30A | E/R Junction Box Fuse (INHIBITOR SW 15A, ECU-2 10A, EHPS 10A, CRUISE 10A, TCU 15A, ESP 10A,STOP LP 10A, AFLS 10A) |
| INTELLIGENT A/PEDAL | 10A | Intelligent Accel Pedal Unit |
| DR LOCK DRV | 10A | Driver Door Module |
| STOP LP | 10A | Stop Lamp Switch |
| A/BAG IND | 10A | Instrument Cluster (Air Bag IND.) |
| AFLS | 10A | Auto Head Lamp Leveling Device Sensor, Adaptive Front Lighting Module, Head Lamp LH, Head Lamp RH |
| PDM 1 | 10A | PDM |
| SECURITY LP | 10A | Data Link Connector, Auto Light Sensor & Security Indicator, Rear Door Module LH/RH,Shift Lock |

| Description | Fuse rating | Protected component |
|---|---|---|
| MODULE 1 | 10A | FAM, IPM, Tilt & Telescopic Module, PDM, Driver Door Module, Passenger Door Module, IMS Control Module, Multifunction Switch, Electronic Parking Brake Module, Power Trunk Lid Control Module, Forward & Rear Parking Assist Control Module |
| MODULE 3 | 10A | FAM, Multifunction Switch, Tilt & Telescopic Module, Instrument Cluster, Driver Door Module, Passenger Door Module, Power Trunk Lid Control Module, IMS Control Module, Rear Curtain Module |
| P/HANDLE | 15A | Tilt & Telescopic Module |
| ECS | 15A | ECS Control Module |
| A/BAG | 15A | SRS Control Module |
| AUDIO(B+) | 15A | Audio, Front Monitor, AV Head Module, Rear Monitor (With AV), Rear Audio Switch, Media Module (With AV) |
| S/HEATER DRV | 15A | Driver CCS Control Module, Driver Seat Warmer Module (W/O CCS) |
| P/TRUNK | 30A | Power Trunk Lid Control Module |
| F/LID | 10A | Trunk Lid & Fuel Filler Door Switch (Fuel Filler Door Switch) |
| AUDIO(IG1) | 10A | AV Head Module, Audio, Active Headrest Sensor Module |
| RF RECEIVER | 10A | RF Receiver |
| A/CON(B+) | 10A | A/C Control Module,Tire Pressure Monitoring Module |
| I.O.D | 30A | I/P Junction Box LH Fuse (MODULE 3 10A, AUDIO(B+) 15A ,Rf Receiver 10A , A/CON(IG1) 15A) |

**Instrument panel (Passanger's side fuse panel)**

| Description | Fuse rating | Protected component |
|---|---|---|
| CURTAIN (RR) | 10A | Rear Curtain Module |
| MIRROR | 10A | Driver Door Module, Passenger Door Module |
| IG KEY SUPPLY | 30A | E/R Junction Box Fuse (AQS 10A, WASHER 15A) |
| SUNROOF | 20A | Overhead Console Lamp |
| CONSOLE SW | 10A | Console Switch LH/RH, Piezo Buzzer |
| A/CON(IG2) | 10A | Active Incar Sensor, A/C Control Module |
| P/SEAT PASS | 20A | Passenger Power Seat Relay Box |
| S/HEATER RR | 20A | Rear Seat Warmer Module LH/RH, Rear Power Seat Control Switch |
| MODULE 1 | 10A | Instrument Cluster, Rheostat, Driver CCS Control Module, Passenger CCS Control Module, PDM, IPM |
| MODULE 3 | 10A | Electro Chromic Mirror, Overhead Console Lamp, Rain Sensor, Rear Curtain Module, Camera Module |
| S/HEATER PASS | 20A | Passenger CCS Control Module, Passenger Seat Warmer Module |
| DR LOCK PASS | 15A | Passenger Door Module |
| P/SEAT RR | 20A | Rear Power Seat Relay Box, Rear Slide Limit Switch LH |
| HTD STRG | 15A | Steering Wheel Heater |
| P/OUTLET RR | 15A | Rear Accessory Socket |
| P/OUTLET FRT | 10A | ACC Socket Relay |
| MODULE 2 | 10A | A/C Control Module, IPM, PDM, Key Lock Module |
| PDM | 25A | PDM |
| AUDIO | 10A | Audio, Camera Module, Rear Audio Switch, Front Monitor, Media Module, AV Head Module |

**Engine compartment fuse panel**

| Description | Fuse rating | Protected component |
|---|---|---|
| ALT | 200A | Generator |
| I/P LH PWR | 60A | I/P Junction Box LH |
| I/P RH PWR | 60A | I/P Junction Box RH |
| C/FAN | 60A | Cooling Fan Relay |
| EHPS | 80A | EHPS Module |
| AIR ECS | 40A | ECS Compressor Relay |
| AMP 1 | 40A | AV JBL AMP |
| AMP 2 | 30A | AMP |
| PDM(ACC) | 30A | PDM (ACC) Relay |
| VDC/ESC 1 | 30A | VDC/ESC Control Module, Multipurpose Check Connector |
| VDC/ESC 2 | 30A | VDC/ESC Control Module, Multipurpose Check Connector |
| PDM(IG1) | 30A | PDM (IG1) Relay |
| PDM(IG2) | 30A | PDM (IG2) Relay |
| P/SEAT DRV | 30A | Driver Power Seat Relay Box, IMS Control Module, Driver Lumbar Support Switch |
| H/LP WASHER | 20A | Head Lamp Washer Relay |
| VACUUM PUMP | 20A | Brake Vacuum Pump Relay |
| P/OUTLET FRT | 25A | ACC Socket Relay |
| TRUNK | 10A | Trunk Lid Relay |
| IMS | 10A | - |
| STOP LP | 10A | Stop Lamp Relay, Stop Lamp Switch, IPM |
| B/UP LP | 10A | Rear Combination Lamp LH/RH (IN), Electro Chromic Mirror, Camera Module, Rear Curtain Module |

| Description | Fuse rating | Protected component |
|---|---|---|
| ECU | 30A | Engine Control Relay |
| BLOWER | 40A | Blower Relay |
| IGN SW 2 (PRESAFETY PASS) | 40A | Ignition Switch (IG 2, START), Presafety Seat Belt Passenger |
| RR HTD | 40A | E/R Junction Box Fuse (AQS 10A, WASHER 15A) |
| IGN SW 1 (PRESAFETY DRV) | 40A | Ignition Switch (IG 1, ACC), Presafety Seat Belt Driver |
| A/CON | 10A | A/C Control Module |
| EPB 1 | 15A | Electric Parking Brake Module |
| EPB 2 | 15A | Electric Parking Brake Module |
| HORN | 15A | Horn Relay |
| IPM | 10A | IPM, Head Lamp (Low) Relay |
| AQS | 10A | AQS Sensor, Electronic Control Wiper Module, Blower Relay |
| DEICER | 15A | Heated Glass (FR) Relay |
| WASHER | 15A | Washer Relay |
| WIPER | 30A | Wiper Motor |
| HTD MIRR | 10A | A/C Control Module, Power Outside Mirror & Mirror Folding Motor LH/RH |
| TCU | 15A | TCM |
| AFLS | 10A | Head Lamp LH/RH |
| EHPS | 10A | EHPS Module |
| VDC/ESC | 10A | ESC Control Module, Multipurpose Check Connector |
| ECU(IG1) | 10A | ECM |
| IGN COIL | 20A | Ignition Coil #1,2,3,4,5,6 |
| INJECTOR(B+) | 15A | Injector Drive Box |

| Description | Fuse rating | Protected component |
|---|---|---|
| SENSOR 1 | 10A | ECM, Mass Air Flow Sensor, Oxygen Sensor #1,2,3,4 |
| SENSOR 2 | 10A | Canister Purge Control Solenoid Valve, Variable Intake Manifold Valve, Oil Control Valve, ECM, Cooling Fan Relay, Immobilizer Module, Fuel Pump Resister |
| SENSOR 3 | 10A | ECM, Injector #1~#6, Fuel Pump Relay |
| H/LP RH | 15A | Head Lamp RH |
| H/LP LH | 15A | Head Lamp LH |
| INJECTOR(IG1) | 10A | Injector Drive Box |
| CRUSIE | 10A | Smart Cruise Control Module |
| STOP LP | 10A | Stop Lamp Switch, Stop Lamp Relay, Generator,Vacuum Sw |
| ECU(B+) | 15A | ECM,TCM,Injector Drive Box |
| ROOM LP | 10A | Room Lamp Relay |
| F/PUMP | 20A | Fuel Pump Relay |
| START | 30A | Start Solenoid |

## LIGHT BULBS

G220000AEN

**⚠ WARNING - Working on the lights**

**Prior to working on the light, firmly apply the parking brake, ensure that the ignition switch is turned to the LOCK position and turn off the lights to avoid sudden movement of the vehicle and burning your fingers or receiving an electric shock.**

*Use only the bulbs of the specified wattage.*

**⚠ CAUTION**

***Be sure to replace the burned-out bulb with one of the same wattage rating. Otherwise, it may cause damage to the fuse or electric wiring system.***

**⚠ CAUTION**

***If you don't have necessary tools, the correct bulbs and the expertise, consult an authorized HYUNDAI dealer. In many cases, it is difficult to replace vehicle light bulbs because other parts of the vehicle must be removed before you can get to the bulb. This is especially true if you have to remove the headlight assembly to get to the bulb(s). Removing/installing the headlight assembly can result in damage to the vehicle.***

**✻ NOTICE**

**After driving in rain or washing, the headlight and taillight lenses could appear frosty. This condition is caused by the temperature difference between the lamp inside and outside. This is similar to the condensation on your windows inside your vehicle during the rain and doesn't indicate a problem with your vehicle. If the water leaks into the lamp bulb circuitry, have the vehicle checked by an authorized HYUNDAI dealer.**

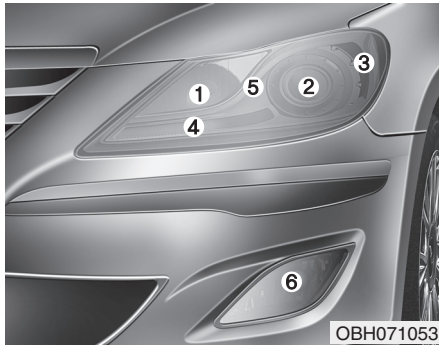


G220100BBH

**Headlight, position light, turn signal light, side marker light and front fog light bulb replacement**

(1) Headlight (High)
(2) Headlight (Low)
(3) Front side marker light
(4) Front turn signal light
(5) Position light
(6) Front fog light (if equipped)

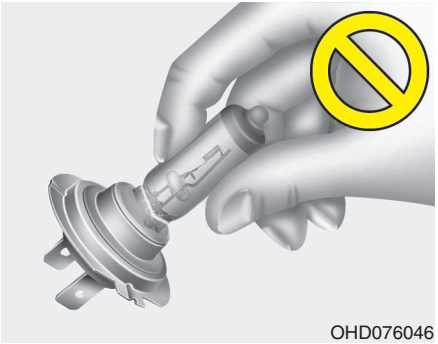


G220101AUN-EU

*Headlight bulb*

**⚠ WARNING - Halogen bulbs**

- **Halogen bulbs contain pressurized gas that will produce small pieces of glass if broken.**
- **Always handle the bulbs carefully, and avoid scratches and abrasions. If the bulbs are lit, avoid contact with liquids.**
- **Never touch the glass with bare hands. Residual oil may cause the bulb to overheat and burst when lit.**

**(Continued)**

**(Continued)**

- **If a bulb becomes damaged or cracked, replace it immediately and carefully dispose of it.**
- **Wear eye protection when changing a bulb. Allow the bulb to cool down before handling it.**

***Headlight (HID type) bulb replacement (if equipped)***

If the light bulb is not operating, have the vehicle checked by an authorized HYUNDAI dealer.

**⚠ WARNING - HID Headlight low beam (if equipped)**

**Do not attempt to replace or inspect the low beam (XENON bulb) due to electric shock danger. If the low beam (XENON bulb) is not working, have your vehicle checked by an authorized HYUNDAI Dealer.**

**✻ NOTICE**

**HID lamps have superior performance vs. halogen bulbs. HID lamps are estimated by the manufacturer to last twice as long or longer than halogen bulbs depending on their frequency of use. They will probably require replacement at some point in the life of the vehicle. Cycling the headlamps on and off more than typical use will shorten HID lamp life. HID lamps do not fail in the same manner as halogen incandescent lamps. If a headlamp goes out after a period of operation but will immediately relight when the headlamp switch is cycled it is likely the HID lamp needs to be replaced. HID lighting components are more complex than conventional halogen bulb and thus have higher replacement cost.**

G220102ABH-EU

***Headlight (bulb type), front turn signal, position, side marker and fog light bulbs (if equipped)***

If the light bulb is not operating, have the vehicle checked by an authorized HYUNDAI dealer.

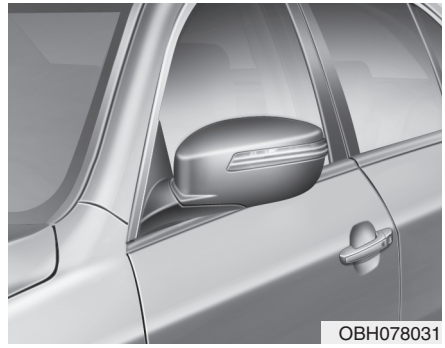


G220200AEN

## Side repeater light bulb replacement (if equipped)

If the light bulb is not operating, have the vehicle checked by an authorized HYUNDAI dealer.

G220300ABH

## Rear combination light bulb replacement

(1) Back-up light
(2) Rear turn signal light
(3) Stop and tail light
(4) Rear side marker light
(5) Tail light

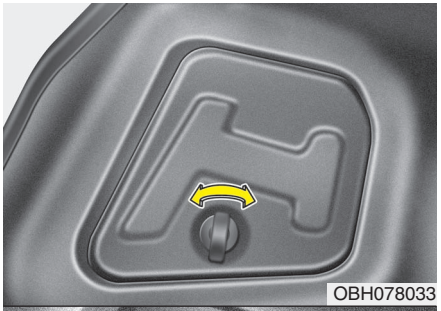
OBH078033

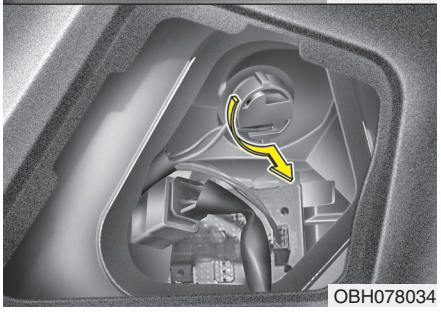
OBH078034

***Rear turn signal light***

1. Open the trunk lid.
2. Remove the service cover by pulling out the service cover.
3. Remove the socket from the assembly by turning the socket counterclockwise until the tabs on the socket align with the slots on the assembly.
4. Remove the bulb from the socket by pressing it in and rotating it counterclockwise until the tabs on the bulb align with the slots in the socket. Pull the bulb out of the socket.
5. Insert a new bulb by inserting it into the socket and rotating it until it locks into place.
6. Install the socket in the assembly by aligning the tabs on the socket with the slots in the assembly. Push the socket into the assembly and turn the socket clockwise.
7. Install the service cover by putting it into the service hole.

***Back-up, stop and tail light***

If the light is not operating, have the vehicle checked by an authorized HYUNDAI dealer.

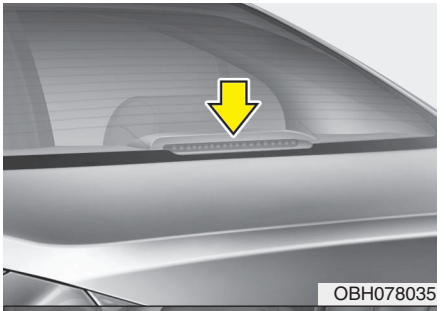
OBH078035

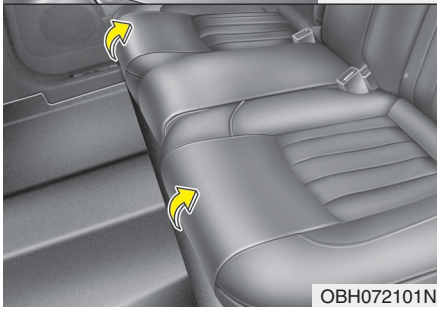
OBH072101N

## High mounted stop light

***1. Remove the rear seat***

1. Disconnect the negative battery cable.
2. Remove the rear seat cushion.

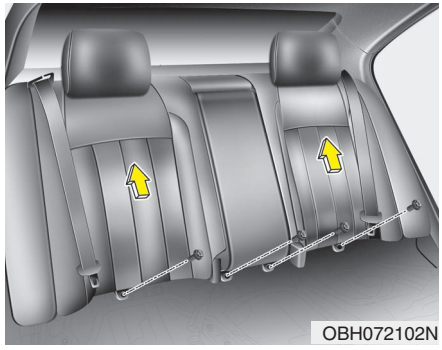


3. Loosen the mounting bolts, then remove the rear seat back.

Tightening torque
: 34.3~53.9 N.m
3.5~5.5 kgf.m,
25.3~39.8 lb-ft

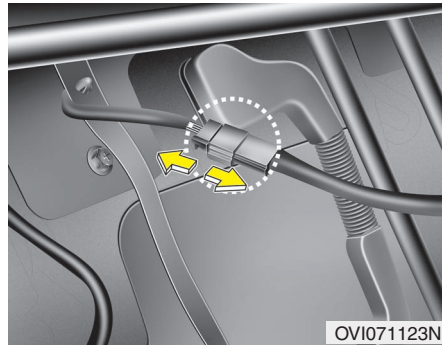


4. Disconnect the connector.

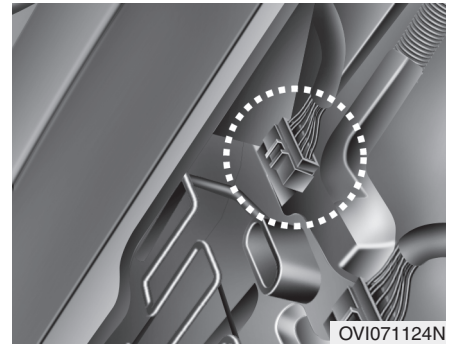


5. Push the hook, disconnect the main connector.

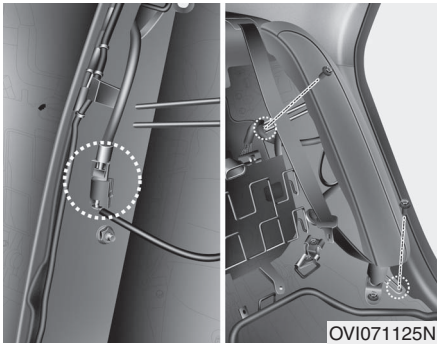


6. Loosen the mounting bolts, then disconnect the connector.
7. Remove the side seat.

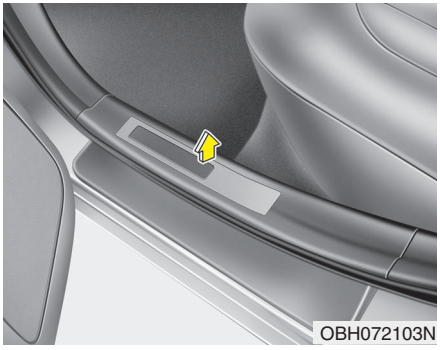


***2. Remove the rear package tray trim***

1. Remove the rear door scuff trim.

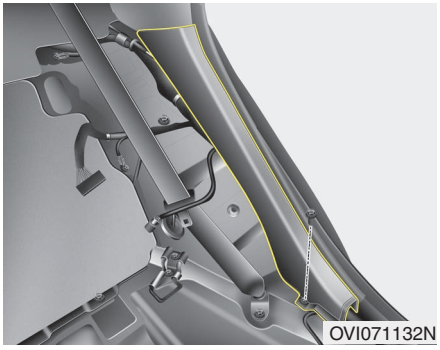


2. Loosen the mounting screw, then remove the rear wheel house trim.

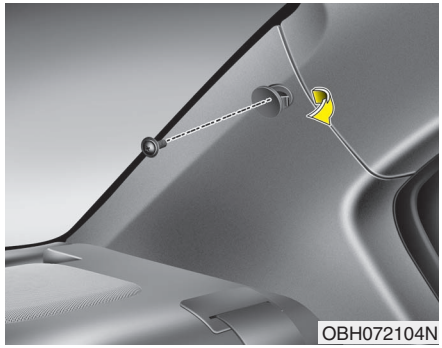


3. Remove the cap, then loosen the mounting screw.
4. Remove the rear pillar trim.

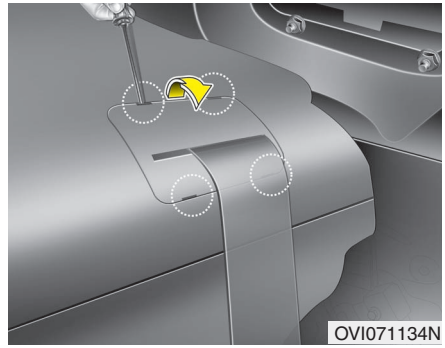


5. Push the hook, remove the rear seat belt cover.

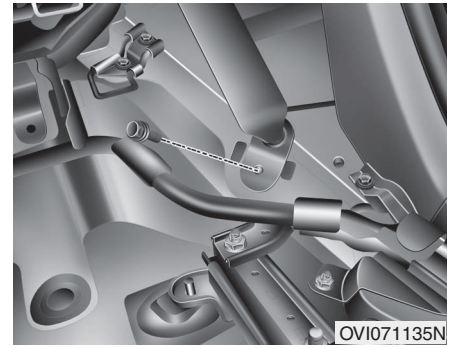


6. Remove the rear seat belt lower anchor.

Tightening torque
: 39.2~53.9 N.m
4.0~5.5 kgf.m
28.9~39.8 lb-ft

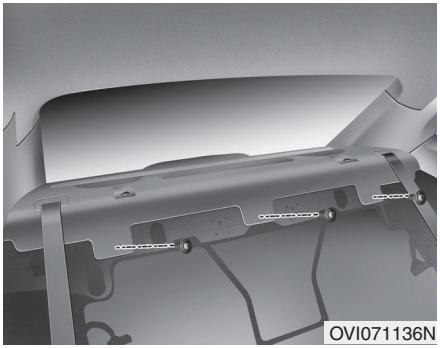
OVI071136N

7. Loosen the mounting screws, then remove the package tray trim.

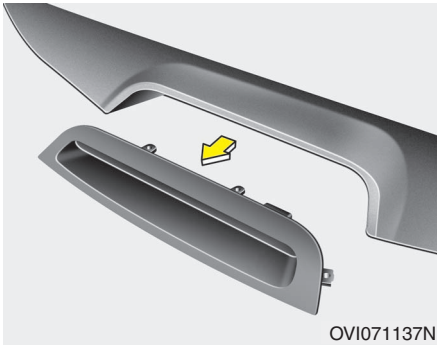
OVI071137N

***3. Replace the high mounted stop light***

1. Remove the high mounted stop lamp after removing screws.
2. Install a new light.

***4. Installation***

Installation is the reverse of removal.

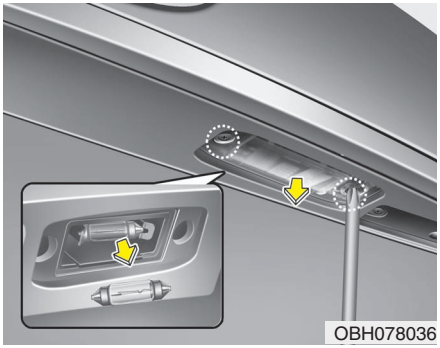
OBH078036

G220500AEN

## License plate light bulb replacement

1. Loosen the lens retaining screws with a philips head screwdriver.
2. Remove the lens.
3. Remove the bulb by pulling it straight out.
4. Install a new bulb.
5. Reinstall the lens securely with the lens retaining screws.

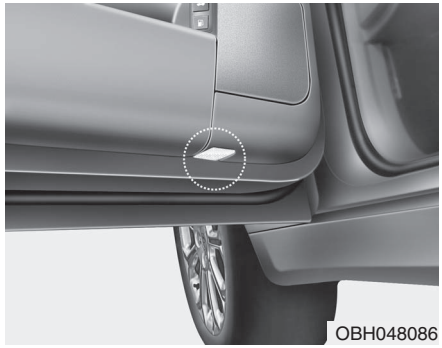


G220900ABH

## Door courtesy lamp bulb replacement

If the light is not operating, have the vehicle checked by an authorized HYUNDAI dealer.

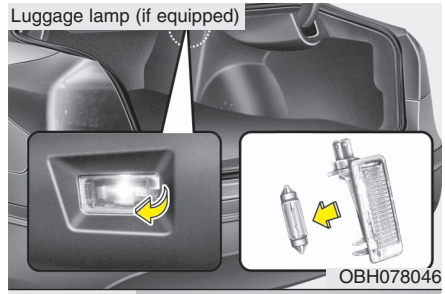


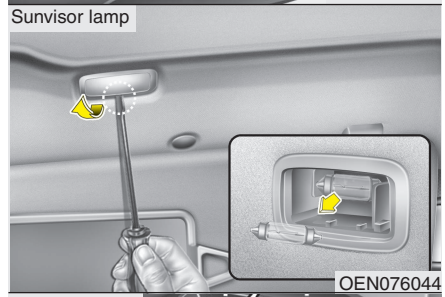


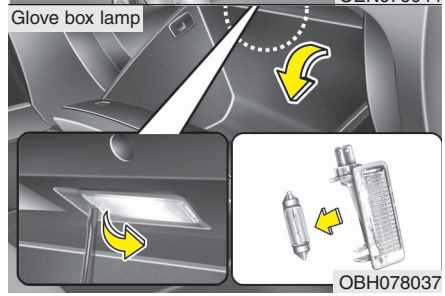


G220600BBH

## Interior light bulb replacement

1. Using a flat-blade screwdriver, gently pry the lens from the interior light housing.
2. Remove the bulb by pulling it straight out.

**⚠ WARNING**

**Prior to working on the Interior Lights, ensure that the "OFF" button is depressed to avoid burning your fingers or receiving an electric shock.**

3. Install a new bulb in the socket.
4. Align the lens tabs with the interior light housing notches and snap the lens into place.
5. If the map lamp and room lamp are not operating, have the vehicle checked by an authorized HYUNDAI dealer.

**⚠ CAUTION**

***Use care not to dirty or damage lens, lens tab, and plastic housings.***

# APPEARANCE CARE

## Exterior care

G230101AUN

### *Exterior general caution*

It is very important to follow the label directions when using any chemical cleaner or polish. Read all warning and caution statements that appear on the label.

G230102ABH

### *Finish maintenance*

**Washing**

To help protect your vehicle's finish from rust and deterioration, wash it thoroughly and frequently at least once a month with lukewarm or cold water.

If you use your vehicle for off-road driving, you should wash it after each off-road trip. Pay special attention to the removal of any accumulation of salt, dirt, mud, and other foreign materials. Make sure the drain holes in the lower edges of the doors and rocker panels are kept clear and clean.

Insects, tar, tree sap, bird droppings, industrial pollution and similar deposits can damage your vehicle's finish if not removed immediately.

Even prompt washing with plain water may not completely remove all these deposits. A mild soap, safe for use on painted surfaces, may be used.

After washing, rinse the vehicle thoroughly with lukewarm or cold water. Do not allow soap to dry on the finish.

**⚠ CAUTION**

- ***Do not use strong soap, chemical detergents or hot water, and do not wash the vehicle in direct sunlight or when the body of the vehicle is warm.***
- ***Be careful when washing the side windows of your vehicle. Especially, with high-pressure water, water may leak through the windows and wet the interior.***
- ***To prevent damage to the plastic parts and lamps, do not clean with chemical solvents or strong detergents.***

**⚠ WARNING - Wet brakes**

**After washing the vehicle, test the brakes while driving slowly to see if they have been affected by water. If braking performance is impaired, dry the brakes by applying them lightly while maintaining a slow forward speed.**

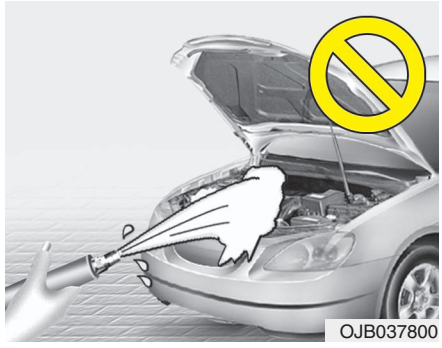
OJB037800

⚠ **CAUTION**

- ***Water washing in the engine compartment including high pressure water washing is not recommended. It may cause the failure of electrical circuits or engine and related part located in the engine compartment.***
- ***Never allow water or other liquids to come in contact with electrical/electronic components and the air duct inside the vehicle as this may damage them.***

**Waxing**

A good coat of wax is a barrier between your paint and contaminate. Keeping a good coat of wax on your vehicle will help protect it.

Wax the vehicle when water will no longer bead on the paint.

Always wash and dry the vehicle before waxing. Use a good quality liquid or paste wax, and follow the manufacturer's instructions. Wax all metal trim to protect it and to maintain its luster.

Removing oil, tar, and similar materials with a spot remover will usually strip the wax from the finish. Be sure to re-wax these areas even if the rest of the vehicle does not yet need waxing.

⚠ **CAUTION**

- ***Wiping dust or dirt off the body with a dry cloth will scratch the finish.***
- ***Do not use steel wool, abrasive cleaners, or strong detergents containing highly alkaline or caustic agents on chrome-plated or anodized aluminum parts. This may result in damage to the protective coating and cause discoloration or paint deterioration.***

G230103AUN

***Finish damage repair***

Deep scratches or stone chips in the painted surface must be repaired promptly. Exposed metal will quickly rust and may develop into a major repair expense.

✻ **NOTICE**

**If your vehicle is damaged and requires any metal repair or replacement, be sure the body shop applies anti-corrosion materials to the parts repaired or replaced.**

G230104AUN

### *Bright-metal maintenance*

- To remove road tar and insects, use a tar remover, not a scraper or other sharp object.
- To protect the surfaces of bright-metal parts from corrosion, apply a coating of wax or chrome preservative and rub to a high luster.
- During winter weather or in coastal areas, cover the bright metal parts with a heavier coating of wax or preservative. If necessary, coat the parts with non-corrosive petroleum jelly or other protective compound.

G230105AUN

### *Underbody maintenance*

Corrosive materials used for ice and snow removal and dust control may collect on the underbody. If these materials are not removed, accelerated rusting can occur on underbody parts such as the fuel lines, frame, floor pan and exhaust system, even though they have been treated with rust protection.

Thoroughly flush the vehicle underbody and wheel openings with lukewarm or cold water once a month, after off-road driving and at the end of each winter. Pay special attention to these areas because it is difficult to see all the mud and dirt. It will do more harm than good to wet down the road grime without removing it. The lower edges of doors, rocker panels, and frame members have drain holes that should not be allowed to clog with dirt; trapped water in these areas can cause rusting.

**⚠ WARNING**

**After washing the vehicle, test the brakes while driving slowly to see if they have been affected by water. If braking performance is impaired, dry the brakes by applying them lightly while maintaining a slow forward speed.**

G230106AUN

### *Aluminum wheel maintenance*

The aluminum wheels are coated with a clear protective finish.

- Do not use any abrasive cleaner, polishing compound, solvent, or wire brushes on aluminum wheels. They may scratch or damage the finish.
- Use only a mild soap or neutral detergent, and rinse thoroughly with water. Also, be sure to clean the wheels after driving on salted roads. This helps prevent corrosion.
- Avoid washing the wheels with high-speed car wash brushes.
- Do not use any cleaners containing acid or acid detergents. It may damage and corrode the aluminum wheels coated with a clear protective finish.

G230107AUN

## *Corrosion protection*

### Protecting your vehicle from corrosion

By using the most advanced design and construction practices to combat corrosion, we produces cars of the highest quality. However, this is only part of the job. To achieve the long-term corrosion resistance your vehicle can deliver, the owner's cooperation and assistance is also required.

### Common causes of corrosion

The most common causes of corrosion on your car are:

- Road salt, dirt and moisture that is allowed to accumulate underneath the car.
- Removal of paint or protective coatings by stones, gravel, abrasion or minor scrapes and dents which leave unprotected metal exposed to corrosion.

### High-corrosion areas

If you live in an area where your car is regularly exposed to corrosive materials, corrosion protection is particularly important. Some of the common causes of accelerated corrosion are road salts, dust control chemicals, ocean air and industrial pollution.

### Moisture breeds corrosion

Moisture creates the conditions in which corrosion is most likely to occur. For example, corrosion is accelerated by high humidity, particularly when temperatures are just above freezing. In such conditions, the corrosive material is kept in contact with the car surfaces by moisture that is slow to evaporate.

Mud is particularly corrosive because it is slow to dry and holds moisture in contact with the vehicle. Although the mud appears to be dry, it can still retain the moisture and promote corrosion.

High temperatures can also accelerate corrosion of parts that are not properly ventilated so the moisture can be dispersed. For all these reasons, it is particularly important to keep your car clean and free of mud or accumulations of other materials. This applies not only to the visible surfaces but particularly to the underside of the car.

### To help prevent corrosion

You can help prevent corrosion from getting started by observing the following:

### Keep your car clean

The best way to prevent corrosion is to keep your car clean and free of corrosive materials. Attention to the underside of the car is particularly important.

- If you live in a high-corrosion area — where road salts are used, near the ocean, areas with industrial pollution, acid rain, etc.—, you should take extra care to prevent corrosion. In winter, hose off the underside of your car at least once a month and be sure to clean the underside thoroughly when winter is over.
- When cleaning underneath the car, give particular attention to the components under the fenders and other areas that are hidden from view. Do a thorough job; just dampening the accumulated mud rather than washing it away will accelerate corrosion rather than prevent it. Water under high pressure and steam are particularly effective in removing accumulated mud and corrosive materials.
- When cleaning lower door panels, rocker panels and frame members, be sure that drain holes are kept open so that moisture can escape and not be trapped inside to accelerate corrosion.

**Keep your garage dry**

Don't park your car in a damp, poorly ventilated garage. This creates a favorable environment for corrosion. This is particularly true if you wash your car in the garage or drive it into the garage when it is still wet or covered with snow, ice or mud. Even a heated garage can contribute to corrosion unless it is well ventilated so moisture is dispersed.

**Keep paint and trim in good condition**

Scratches or chips in the finish should be covered with "touch-up" paint as soon as possible to reduce the possibility of corrosion. If bare metal is showing through, the attention of a qualified body and paint shop is recommended.

Bird droppings : Bird droppings are highly corrosive and may damage painted surfaces in just a few hours. Always remove bird droppings as soon as possible.

**Don't neglect the interior**

Moisture can collect under the floor mats and carpeting to cause corrosion. Check under the mats periodically to be sure the carpeting is dry. Use particular care if you carry fertilizers, cleaning materials or chemicals in the car.

These should be carried only in proper containers and any spills or leaks should be cleaned up, flushed with clean water and thoroughly dried.

## Interior care

G230201AUN

***Interior general precautions***

Prevent caustic solutions such as perfume and cosmetic oil from contacting the dashboard because they may cause damage or discoloration. If they do contact the dashboard, wipe them off immediately. See the instructions that follow for the proper way to clean vinyl.

**⚠ CAUTION**

- ***Never allow water or other liquids to come in contact with electrical/electronic components inside the vehicle as this may damage them.***
- ***When cleaning leather products (steering wheel, seats etc.), use neutral detergents or low alcohol content solutions. If you use high alcohol content solutions or acid/alkaline detergents, the color of the leather may fade or the surface may get stripped off.***

G230202AUN

### *Cleaning the upholstery and interior trim*

**Vinyl**

Remove dust and loose dirt from vinyl with a whisk broom or vacuum cleaner. Clean vinyl surfaces with a vinyl cleaner.

**Fabric**

Remove dust and loose dirt from fabric with a whisk broom or vacuum cleaner. Clean with a mild soap solution recommended for upholstery or carpets. Remove fresh spots immediately with a fabric spot cleaner. If fresh spots do not receive immediate attention, the fabric can be stained and its color can be affected. Also, its fire-resistant properties can be reduced if the material is not properly maintained.

**⚠ CAUTION**

***Using anything but recommended cleaners and procedures may affect the fabric's appearance and fire-resistant properties.***

G230203AUN

### *Cleaning the lap/shoulder belt webbing*

Clean the belt webbing with any mild soap solution recommended for cleaning upholstery or carpet. Follow the instructions provided with the soap. Do not bleach or re-dye the webbing because this may weaken it.

G230204AUN

### *Cleaning the interior window glass*

If the interior glass surfaces of the vehicle become fogged (that is, covered with an oily, greasy or waxy film), they should be cleaned with glass cleaner. Follow the directions on the glass cleaner container.

**⚠ CAUTION**

***Do not scrape or scratch the inside of the rear window. This may result in damage to the rear window defroster grid.***

## EMISSION CONTROL SYSTEM

G270000AEN-EU

The emission control system of your vehicle is covered by a written limited warranty. Please see the warranty information contained in the Owner's Handbook & Warranty Information booklet in your vehicle.

Your vehicle is equipped with an emission control system to meet all applicable emission regulations.

There are three emission control systems, as follows.

(1) Crankcase emission control system
(2) Evaporative emission control system
(3) Exhaust emission control system

In order to assure the proper function of the emission control systems, it is recommended that you have your car inspected and maintained by an authorized HYUNDAI dealer in accordance with the maintenance schedule in this manual.

**Caution for the Inspection and Maintenance Test (With Electronic Stability Control (ESC) system)**

- **To prevent the vehicle from misfiring during dynamometer testing, turn the Electronic Stability Control (ESC) system off by pressing the ESC switch.**
- **After dynamometer testing is completed, turn the ESC system back on by pressing the ESC switch again.**

G270100AUN

### 1. Crankcase emission control system

The positive crankcase ventilation system is employed to prevent air pollution caused by blow-by gases being emitted from the crankcase. This system supplies fresh filtered air to the crankcase through the air intake hose. Inside the crankcase, the fresh air mixes with blow-by gases, which then pass through the PCV valve into the induction system.

G270200AUN

### 2. Evaporative emission control (including ORVR: Onboard Refueling Vapor Recovery) system

The Evaporative Emission Control System is designed to prevent fuel vapors from escaping into the atmosphere.

(The ORVR system is designed to allow the vapors from the fuel tank to be loaded into a canister while refueling at the gas station, preventing the escape of fuel vapors into the atmosphere.)

G270201AUN

### *Canister*

Fuel vapors generated inside the fuel tank are absorbed and stored in the onboard canister. When the engine is running, the fuel vapors absorbed in the canister are drawn into the engine intake manifold through the purge control solenoid valve.

G270202AUN

### *Purge Control Solenoid Valve (PCSV)*

The purge control solenoid valve is controlled by the Engine Control Module (ECM); when the engine coolant temperature is low during idling, the PCSV closes so that evaporated fuel is not taken into the engine. After the engine warms-up during ordinary driving, the PCSV opens to introduce evaporated fuel to the engine.

G270300AUN

## 3. Exhaust emission control system

The Exhaust Emission Control System is a highly effective system which controls exhaust emissions while maintaining good vehicle performance.

G270301AUN

### *Vehicle modifications*

- This vehicle should not be modified. Modification of your vehicle could affect its performance, safety or durability and may even violate governmental safety and emissions regulations.

  In addition, damage or performance problems resulting from any modification may not be covered under warranty.
- Use of unauthorized electric devices may cause: Abnormal vehicle operation, Wire damage, Battery discharge, Fire.

  Be careful not to damage your vehicle by use of unauthorized electric devices.

G270302AUN-EU

### *Engine exhaust gas precautions (carbon monoxide)*

- Carbon monoxide can be present with other exhaust fumes. Therefore, if you smell exhaust fumes of any kind inside your vehicle, have it inspected and repaired immediately. If you ever suspect exhaust fumes are coming into your vehicle, drive it only with all the windows fully open. Have your vehicle checked and repaired immediately.

**⚠ WARNING - Exhaust**

**Engine exhaust gases contain carbon monoxide (CO). Though colorless and odorless, it is dangerous and could be lethal if inhaled. Follow the instructions on this page to avoid CO poisoning.**

**⚠ CALIFORNIA PROPOSITION 65 WARNING**

**Engine exhaust and a wide variety of automobile components and parts, including components found in the interior furnishings in a vehicle, contain or emit chemicals known to the State of California to cause cancer and birth defects and reproductive harm. In addition, certain fluids contained in vehicles and certain products of component wear contain or emit chemicals known to the State of California to cause cancer and birth defects or other reproductive harm.**

- Do not operate the engine in confined or closed areas (such as garages) any more than what is necessary to move the vehicle in or out of the area.
- When the vehicle is stopped in an open area for more than a short time with the engine running, adjust the ventilation system (as needed) to draw outside air into the vehicle.
- Never sit in a parked or stopped vehicle for any extended time with the engine running.
- When the engine stalls or fails to start, excessive attempts to restart the engine may cause damage to the emission control system.

G270303AEN

### *Operating precautions for catalytic converters (if equipped)*

**⚠ WARNING - Fire**

- **A hot exhaust system can ignite flammable items under your vehicle. Do not park, idle, or drive the vehicle over or near flammable objects, such as grass, vegetation, paper, leaves, etc.**
- **The exhaust system and catalytic system are very hot while the engine is running or immediately after the engine is turned off. Keep away from the exhaust system and catalytic, you may get burned.**

  **Also, do not remove the heat sink around the exhaust system, do not seal the bottom of the vehicle or do not coat the vehicle for corrosion control. It may present a fire risk under certain conditions.**

Your vehicle is equipped with a catalytic converter emission control device.

Therefore, the following precautions must be observed:

- Use only UNLEADED FUEL for gasoline engines.
- Do not operate the vehicle when there are signs of engine malfunction, such as misfire or a noticeable loss of performance.
- Do not misuse or abuse the engine. Examples of misuse are coasting with the ignition off and descending steep grades in gear with the ignition off.
- Do not operate the engine at high idle speed for extended periods (5 minutes or more).
- Do not modify or tamper with any part of the engine or emission control system. All inspections and adjustments must be made by an authorized HYUNDAI dealer.
- Avoid driving with a very low fuel level. If you run out of gasoline, it could cause the engine to misfire and result in excessive loading of the catalytic converter.

Failure to observe these precautions could result in damage to the catalytic converter and to your vehicle. Additionally, such actions could void your warranties.

## CALIFORNIA PERCHLORATE NOTICE

G280000AEN

Perchlorate Material-special handling may apply, See www.dtsc.ca.gov/hazardouswaste/perchlorate.

Notice to California Vehicle Dismantlers:

Perchlorate containing materials, such as air bag inflators, seatbelt pretensioners and keyless remote entry batteries, must be disposed of according to Title 22 California Code of Regulations Section 67384.10 (a).

Dimensions / 8-2
Bulb wattage / 8-2
Tires and wheels / 8-3
Recommended lubricants and capacities / 8-4
Vehicle identification number (VIN) / 8-6
Vehicle certification label / 8-6
Tire specification and pressure label / 8-7
Engine number / 8-7
Consumer information / 8-8
Reporting safety defects / 8-9
Binding arbitration / 8-9

# Specifications, Consumer information, Reporting safety defects

8

## DIMENSIONS

I010000ABH

| Item | in (mm) |
|---|---|
| Overall length | 196.3 (4985) |
| Overall width | 74.4 (1890) |
| Overall height | 58.1 (1475)*1 / 58.2 (1480)*2 |
| Front tread | 63.8 (1620)*1 / 63.1 (1604)*2 |
| Rear tread | 64.4 (1636)*1 / 63.8 (1621)*2 |
| Wheelbase | 115.6 (2935) |

*1 : with P215/60R17 tire or with P225/55R17 tire
*2 : with P235/50R18 tire or with P235/45R19 tire

## BULB WATTAGE

I030000ABH

| Light Bulb | Wattage |
|---|---|
| Headlights (Low) | 55 or 35 (HID) |
| Headlights (High) | 55 |
| Front turn signal lights | 24 |
| Position lights | LED |
| Side repeater lights | LED |
| Front side marker lights | LED |
| Front fog lights* | 35 |
| Stop and tail lights | LED |
| Tail light | LED |
| Rear turn signal lights | 21 |
| Back-up lights | 16 |
| Rear side marker lights | LED |
| High mounted stop light | LED |
| License plate lights | 5 |
| Map lamps | LED |
| Room lamps | LED |
| Luggage lamp | 5 |
| Glove box lamp | 5 |
| Vanity mirror lamps | 5 |
| Door courtesy lamps* | 5 |

* : If equipped

## TIRES AND WHEELS

I020000AEN-EU

| Item | Tire size | Wheel size | Inflation pressure kPa (psi) | | | | Wheel lug nut torque lb•ft (kg•m, N•m) |
|---|---|---|---|---|---|---|---|
| | | | Normal load * | | Maximum load | | |
| | | | Front | Rear | Front | Rear | |
| Full size tire | P215/60R17 | 6.5J×17 | 230 (33) | 230 (33) | 230 (33) | 230 (33) | 65~79 (9~11, 88~107) |
| | P225/55R17 | | | | | | |
| | P235/50R18 | 7.5J×18 | | | | | |
| | P235/45R19 | 8.0J×19 | | | | | |
| Compact spare tire | T135/90D17 | 4.0Tx17 | 420 (60) | 420 (60) | 420 (60) | 420 (60) | |
| | T155/80R18 | 4.0Tx18 | 420 (60) | 420 (60) | 420 (60) | 420 (60) | |

* Normal load : Up to 3 persons

### ✻ NOTICE

**It is permissible to add 3psi to the standard tire pressure specification if colder temperatures are expected soon. Tires typically loose 1psi for every 12°F temperature drop. If extreme temperature variations are expected, re-check your tire pressure as necessary to keep them properly inflated.**

## RECOMMENDED LUBRICANTS AND CAPACITIES

I040000BBH-EU

To help achieve proper engine and powertrain performance and durability, use only lubricants of the proper quality. The correct lubricants also help promote engine efficiency that results in improved fuel economy.
These lubricants and fluids are recommended for use in your vehicle.

| Lubricant | | Volume | Classification |
|---|---|---|---|
| Engine oil *1 *2 (drain and refill) Recommends QUAKER STATE | 3.8L | 5.49 US qt. (5.2 *l*) | API Service SM*3, ILSAC GF-4 or above |
| | 4.6L | 6.87 US qt. (6.5 *l*) | |
| | 5.0L | 7.19 US qt. (6.8 *l*) | |
| Automatic transmission fluid | | 10.67 US qt. (10.1 *l*) | GS ATF SP-IV-RR, HYUNDAI genuine ATF SP-IV-RR or other brands meeting the above specification approved by HYUNDAI Motor Co., |
| Power steering fluid | With EHPS | 0.95 US qt. (0.9 *l*) | Pentosin CHF 202 |
| | Without EHPS | 0.95 US qt. (0.9 *l*) | PSF-4 |
| Coolant | 3.8L | 8.88 US qt. (8.4 *l*) | Mixture of antifreeze and water (Ethylene glycol base coolant for aluminum radiator) |
| | 4.6L | 14.27 US qt. (13.5 *l*) | |
| | 5.0L | 12.79 US qt. (12.1 *l*) | |
| Brake fluid | | 0.7~0.8 US qt. (0.7~0.8 *l*) | FMVSS116 DOT-3 or DOT-4 |
| Rear differential oil | | 1.48 US qt. (1.4 *l*) | Hypoid gear oil API GL-5, SAE 75W/90 (SHELL SPIRAX X Equivalent) |
| Fuel | 3.8L | 19.28 US gal. (73 *l*) | Unleaded gasoline |
| | 4.6L/5.0L | 20.34 US gal. (77 *l*) | |

*1 Refer to the recommended SAE viscosity numbers on the next page.

*2 Engine oils labeled Energy Conserving Oil are now available. Along with other additional benefits, they contribute to fuel economy by reducing the amount of fuel necessary to overcome engine friction. Often, these improvements are difficult to measure in everyday driving, but in a year's time, they can offer significant cost and energy savings.

*3 If the API service SM engine oil is not available in your country, you are able to use API service SL.

I040100ABH-EU

## Recommended SAE viscosity number

**⚠ CAUTION**

***Always be sure to clean the area around any filler plug, drain plug, or dipstick before checking or draining any lubricant. This is especially important in dusty or sandy areas and when the vehicle is used on unpaved roads. Cleaning the plug and dipstick areas will prevent dirt and grit from entering the engine and other mechanisms that could be damaged.***

Engine oil viscosity (thickness) has an effect on fuel economy and cold weather operating (engine start and engine oil flowability). Lower viscosity engine oils can provide better fuel economy and cold weather performance, however, higher viscosity engine oils are required for satisfactory lubrication in hot weather. Using oils of any viscosity other than those recommended could result in engine damage.

When choosing an oil, consider the range of temperature your vehicle will be operated in before the next oil change. Proceed to select the recommended oil viscosity from the chart.

### ■ 3.8L

| Temperature Range for SAE Viscosity Numbers | | | | | | | | | | |
|---|---|---|---|---|---|---|---|---|---|---|
| Temperature | °C | -30 | -20 | -10 | 0 | 10 | 20 | 30 | 40 | 50 |
| | (°F) | -10 | 0 | 20 | 40 | 60 | 80 | 100 | 120 | |
| Engine Oil *1 | | | | | 10W-30 | | | | | |
| | | | | | 5W-30 | | | | | |

1. For better fuel economy, it is recommended to use the engine oil of a viscosity grade SAE 5W-30 (API Service SM / ILSAC GF-4). However, if the engine oil is not available in your country, select the proper engine oil using the engine oil viscosity chart.

### ■ 4.6L/5.0L

| Temperature Range for SAE Viscosity Numbers | | | | | | | | | | |
|---|---|---|---|---|---|---|---|---|---|---|
| Temperature | °C | -30 | -20 | -10 | 0 | 10 | 20 | 30 | 40 | 50 |
| | (°F) | -10 | 0 | 20 | 40 | 60 | 80 | 100 | 120 | |
| Engine Oil *1 | | | | | 10W-30 | | | | | |
| | | | | | 5W-20, 5W-30 | | | | | |

1. For better fuel economy, it is recommended to use the engine oil of a viscosity grade SAE 5W-20 (API Service SM / ILSAC GF-4). However, if the engine oil is not available in your country, select the proper engine oil using the engine oil viscosity chart.

## VEHICLE IDENTIFICATION NUMBER (VIN)

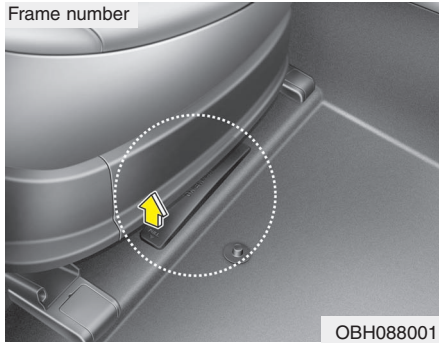


H010000ABH

The vehicle identification number (VIN) is the number used in registering your car and in all legal matters pertaining to its ownership, etc.

The number is punched on the floor under the front passenger's seat. To check the number, open the cover.

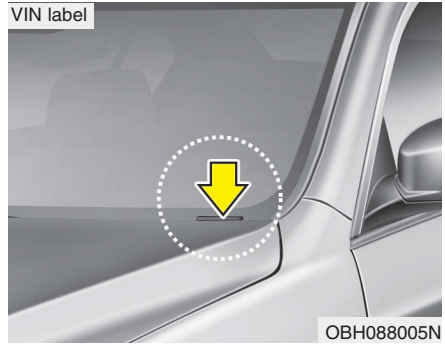


The VIN is also on a plate attached to the top of the dashboard. The number on the plate can easily be seen through the windshield from outside.

## VEHICLE CERTIFICATION LABEL

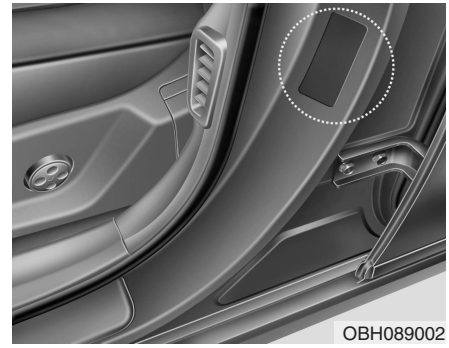


H020000ABH-EU

The vehicle certification label attached on the driver's side center pillar gives the vehicle identification number (VIN).

## TIRE SPECIFICATION AND PRESSURE LABEL

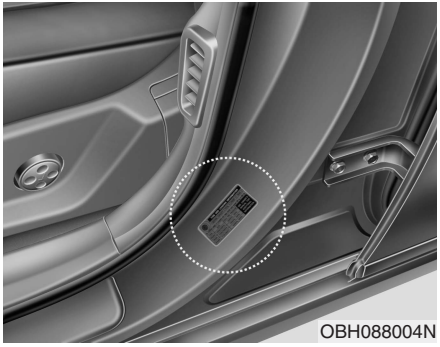


H030000AUN

The tires supplied on your new vehicle are chosen to provide the best performance for normal driving.

The tire label located on the driver's side center pillar gives the tire pressures recommended for your car.

## ENGINE NUMBER

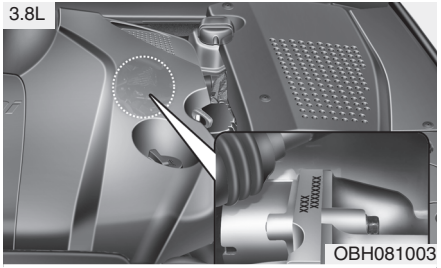


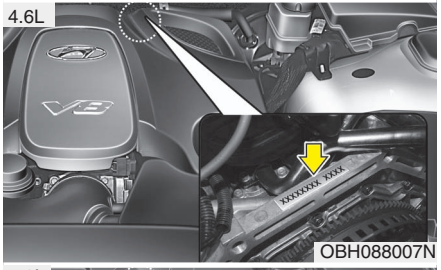


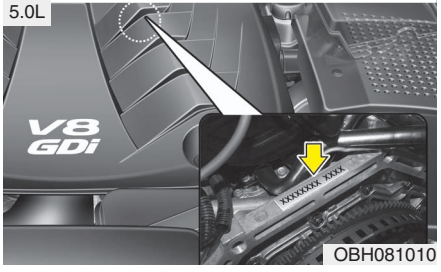


H04000AUN

The engine number is stamped on the engine block as shown in the drawing.

## CONSUMER INFORMATION

H050000BEN

This consumer information has been prepared in accordance with regulations issued by the National Highway Traffic Safety Administration of the U.S. Department of Transportation. Your Hyundai dealer will help answer any questions you may have as you read this information.

Hyundai motor vehicles are designed and manufactured to meet or exceed all applicable safety standards.

For your safety, however, we strongly urge you to read and follow all directions in this Owner's Manual, particularly the information under the headings **"NOTICE", "CAUTION" and "WARNING".**

If, after reading this manual, you have any questions regarding the operation of your vehicle, please contact your nearest Hyundai Motor America Regional Office as listed in the following:

**Eastern Region:** Connecticut, Delaware, Maine, Massachusetts, New Hampshire, New Jersey, New York, Pennsylvania, Rhode Island, Vermont.

Eastern Region
1100 Cranbury South River Road
Jamesburg, NJ 08831
(800) 633-5151

**Southern Region:** Florida, Georgia, Maryland, North Carolina, South Carolina, Virginia, West Virginia.

Southern Region
270 Riverside Parkway, Suite A
Austell, GA 30168
(800) 633-5151

**South Central Region:** Alabama, Arkansas, Louisiana, Mississippi, New Mexico, Oklahoma, Tennessee, Texas.

South Central Region
1421 South Beltline Road, Suite 400
Coppell, TX 75019
(800) 633-5151

**Central Region:** Illinois, Indiana, Iowa, Kentucky, Michigan, Minnesota, Nebraska, North Dakota, South Dakota, Ohio, Wisconsin, Kansas, Missouri.

Central Region
1705 Sequoia Drive
Aurora, Illinois 60506
(800) 633-5151

**Western Region:** Alaska, Hawaii, Arizona, California, Colorado, Idaho, Montana, Nevada, Oregon, Utah, Washington, Wyoming.

Western Region
10550 Talbert Avenue
P.O.Box 20850
Fountain Valley, California 92728-0850
(800) 633-5151

## REPORTING SAFETY DEFECTS

H070000AEN

If you believe that your vehicle has a defect which could cause a crash or could cause injury or death, you should immediately inform the National Highway Traffic Safety Administration (NHTSA) in addition to notifying HYUNDAI MOTOR AMERICA. If NHTSA receives similar complaints, it may open an investigation, and if it finds that a safety defect exists in a group of vehicles, it may order a recall and remedy campaign. However, NHTSA cannot become involved in individual problems between you, your dealer, or HYUNDAI MOTOR AMERICA.

To contact NHTSA, you may call the Vehicle Safety Hotline toll-free at 1-888-327-4236 (TTY: 1-800-424-9153); go to http://www.safercar.gov; or write to: Administrator, NHTSA, 1200 New Jersey Avenue, SE, West Building, Washington, DC 20590. You can also obtain other information about motor vehicle safety from http://www.safercar.gov.

## BINDING ARBITRATION (U.S.A ONLY)

H090000AEN

Any claim or dispute you may have related to your vehicle's warranty or the duties contemplated under the warranty, including claims related to the refund or partial refund of your vehicle's purchase price (excluding personal injury or product liability claims), shall be resolved by binding arbitration. Binding arbitration shall be administered by and through the American Arbitration Association (AAA).

You will not be responsible for paying filing and hearing fees above $275.00. All other arbitration costs shall be borne by Hyundai Motor America. You are not responsible to pay any of the costs Hyundai incurs.

This Binding Arbitration Agreement shall not deprive you of any remedies available to you under applicable law. The parties are waiving their right to seek remedies in court, including the right to a jury trial.

This Binding Arbitration Agreement shall be governed by and interpreted under the Federal Arbitration Act, 9 U.S.C. sections 1-16. Judgment upon any award may be entered in any court having jurisdiction.

You may revoke this Arbitration Agreement by (1) written notice or (2) electronic notice. Written notice must be delivered (via certified mail) to Hyundai Motor America, Attn: Consumer Affairs, 10550 Talbert Avenue, P.O. Box 20849, Fountain Valley, CA 92728-0849.

Electronic notice must be submitted at the following website address: http://warranty-arbitration.hyundaiUSA.com. Notice must be received within 90 days after you purchase your vehicle.

# Index

I

## A


Air bag - advanced supplemental restraint system ..... 3-35
Air bag warning label ..... 3-60
Curtain air bag ..... 3-52
Driver's and passenger's front air bag ..... 3-46
Occupant classification system ..... 3-41
Side impact air bag ..... 3-50
SRS components and functions ..... 3-38
Air cleaner ..... 7-24
Appearance care ..... 7-69
Audio system ..... 4-115
Antenna ..... 4-115
Bluetooth phone operation ..... 4-151
HD Radio™ ..... 4-147
PA710BH ..... 4-120
PA760BH ..... 4-133
Steering wheel audio control ..... 4-115
Automatic climate control system ..... 4-89
Air conditioning ..... 4-96
Automatic heating and air conditioning ..... 4-90
Manual heating and air conditioning ..... 4-91
Rear vent ..... 4-100
Automatic transmission ..... 5-11
Ignition key interlock system ..... 5-15
Shift lock system ..... 5-14
Sports mode ..... 5-14


## B


Battery ..... 7-32
Before driving ..... 5-3
Binding arbitration ..... 8-9
Brake fluid ..... 7-21
Brake system ..... 5-18
Anti-lock brake system (ABS) ..... 5-28
Auto hold ..... 5-25
Electric parking brake (EPB) ..... 5-21
Electronic stability control (ESC) ..... 5-30
Parking brake ..... 5-19
Power brakes ..... 5-18
Bulb wattage ..... 8-2


## C


California perchlorate notice ..... 7-78
Child restraint system ..... 3-27
Placing a passenger seat belt into the auto lock mode ..... 3-29
Securing a child restraint seat with tether anchor system ..... 3-31
Securing a child restraint seat with child seat lower anchor system ..... 3-33
Climate control air filter ..... 7-27
Consumer information ..... 8-8
Cruise control system ..... 5-36

## D

Defroster ..... 4-88
Dimensions ..... 8-2
Door locks ..... 4-16
Central door lock switch ..... 4-17
Child-protector rear door lock ..... 4-19
Driver position memory system ..... 4-34

## E

Economical operation ..... 5-54
Emergency starting ..... 6-4
Jump starting ..... 6-4
Push starting ..... 6-5
Emission control system ..... 7-75
Crankcase emission control system ..... 7-75
Evaporative emission control (including ORVR: Onboard Refueling Vapor Recovery) System ..... 7-75
Exhaust emission control system ..... 7-76
Engine compartment ..... 2-4, 7-2
Engine coolant ..... 7-18
Engine number ..... 8-7
Engine oil ..... 7-16
Engine start/stop button ..... 5-7
Engine start/stop button position ..... 5-7
Starting the engine ..... 5-9
Explanation of scheduled maintenance items ..... 7-13

## F

Foot parking brake ..... 7-25
Fuel filler lid ..... 4-28
Emergency fuel filer lid release ..... 4-30
Fuel requirements ..... 1-3
Fuses ..... 7-49
Fuse/relay panel description ..... 7-53
Main fuse ..... 7-52
Memory fuse ..... 7-51

## H

Hazard warning flasher ..... 4-76
Headrest ..... 3-6, 3-11
Hood ..... 4-27
How to use this manual ..... 1-2

## I

If the engine overheats ..... 6-6
If the engine will not start ..... 6-3
If you have a flat tire ..... 6-13
Changing tires ..... 6-14
Compact spare tire ..... 6-19
Jack and tools ..... 6-13
Removing and storing the spare tire ..... 6-14
In case of an emergency while driving ..... 6-2

Indicator symbols on the instrument cluster ..... 1-7
Instrument cluster ..... 4-48
Engine temperature gauge ..... 4-51
Fuel gauge ..... 4-52
Instrument panel illumination ..... 4-50
Speedometer ..... 4-50
Tachometer ..... 4-50
Trip computer ..... 4-52
Warning and indicators ..... 4-57
Warning on the LCD screen ..... 4-68
Instrument panel overview ..... 2-3
Interior features ..... 4-106
Ashtray ..... 4-106
AUX, USB and iPod® port ..... 4-113
Bluetooth hands-free ..... 4-114
Cigarette lighter ..... 4-106
Clothes hanger ..... 4-111
Cup holder ..... 4-107
Digital clock ..... 4-109
DIS(Driver Information System) ..... 4-114
Floor mat anchor(s) ..... 4-111
Luggage net (holder) ..... 4-112
Navigation system ..... 4-113
Outside thermometer ..... 4-110
Power outlet ..... 4-108
Rear curtain ..... 4-112
Sunvisor ..... 4-107
Interior light ..... 4-85
Interior overview ..... 2-2

## K

Key ..... 5-5
Ignition switch position ..... 5-5
Starting the engine ..... 5-6
Keys ..... 4-3

## L

Lane departure warning system (LDWS) ..... 5-51
Light bulbs ..... 7-60
Headlight, position light, turn signal light, side marker light and front fog light bulb replacement ..... 7-60
High mounted stop light replacement ..... 7-63
Interior light bulb replacement ..... 7-68
License plate light bulb replacement ..... 7-67
Door courtesy lamp bulb replacement ..... 7-68
Rear combination light bulb replacement ..... 7-62
Side repeater light bulb replacement ..... 7-62
Lighting ..... 4-77
AFLS(Adaptive Front Lighting System) ..... 4-81
Battery saver function ..... 4-77
Headlight escort function ..... 4-77

## M

Maintenance services ..... 7-5
Mirrors ..... 4-39
Electric chromic mirror (ECM) with compass and HomeLink® system ..... 4-39
Inside rearview mirror ..... 4-39
Outside rearview mirror ..... 4-45

## O

Owner maintenance ..... 7-6

## P

Parking assist system ..... 4-72
Power steering fluid ..... 7-22

## R

Rear view camera ..... 4-76
Recommended lubricants and capacities ..... 8-4
Remote keyless entry ..... 4-11
Reporting safety defects ..... 8-9
Road warning ..... 6-2

## S

Scheduled maintenance service ..... 7-8
Normal maintenance schedule ..... 7-9
Maintenance under severe usage conditions ..... 7-12
Seat belts ..... 3-16
Pre-tensioner seat belt ..... 3-21
Seat belt - Driver's 3-point system with emergency locking retractor ..... 3-18
Seat belts - Front passenger and rear seat 3-point system with combination locking retractor ..... 3-20
Seat warmer ..... 3-8, 3-14
Seats ..... 3-2
Armrest ..... 3-13
Smart cruise control system ..... 5-40
Smart key ..... 4-6
Special driving conditions ..... 5-56
Driving at night ..... 5-57
Driving in flooded areas ..... 5-58
Driving in the rain ..... 5-58
Hazardous driving conditions ..... 5-56
Highway driving ..... 5-59
Rocking the vehicle ..... 5-56
Smooth cornering ..... 5-57
Steering wheel ..... 4-37
Horn ..... 4-38
Power steering ..... 4-37
Tilt steering ..... 4-37

Storage compartments ..... 4-104
Center console storage ..... 4-104
Glove box ..... 4-104
Sunglass holder ..... 4-105
Sunroof ..... 4-31

## T

Theft-alarm system ..... 4-14
Tire pressure monitoring system (TPMS) ..... 6-7
Changing a tire with TPMS ..... 6-10
Low tire pressure position telltale ..... 6-8
Low tire pressure telltale ..... 6-8
TPMS (Tire pressure monitoring system) malfunction indicator ..... 6-9
Tire specification and pressure label ..... 8-7
Tires and wheels ..... 7-35, 8-3
All season tires ..... 7-47
Checking tire inflation pressure ..... 7-36
Compact spare tire replacement ..... 7-40
Radial-ply tires ..... 7-48
Recommended cold tire inflation pressures ..... 7-35
Snow tires ..... 7-47
Summer tires ..... 7-47
Tire care ..... 7-35
Tire chains ..... 7-48
Tire maintenance ..... 7-40
Tire replacement ..... 7-39
Tire rotation ..... 7-37
Tire sidewall labeling ..... 7-41
Tire terminology and definitions ..... 7-45
Tire traction ..... 7-40
Wheel alignment and tire balance ..... 7-38
Wheel replacement ..... 7-40
Towing ..... 6-21
Emergency towing ..... 6-23
Removable towing hook ..... 6-22
Trailer towing ..... 5-70
Trunk ..... 4-20
Emergency trunk safety release ..... 4-21
Trunk lid control button ..... 4-22

## V

Vehicle break-in process ..... 1-5
Vehicle certification label ..... 8-6
Vehicle data collection and event data recorders ..... 1-6
Vehicle identification number (VIN) ..... 8-6
Vehicle load limit ..... 5-64
Cargo capacity ..... 5-65
Certification label ..... 5-67
Seating capacity ..... 5-64
Tire and loading information label ..... 5-64
Towing capacity ..... 5-65
Vehicle capacity weight ..... 5-64
Vehicle weight ..... 5-69
Base curb weight ..... 5-69
Cargo weight ..... 5-69

GAW (Gross axle weight) ..... 5-69
GAWR (Gross axle weight rating) ..... 5-69
GVW (Gross vehicle weight) ..... 5-69
GVWR (Gross vehicle weight rating) ..... 5-69

## W

Washer fluid ..... 7-23
Windows ..... 4-23
Auto up/down window ..... 4-24
Power window lock button ..... 4-26
Windshield defrosting and defogging ..... 4-101
Auto defogging system ..... 4-103
Defogging logic ..... 4-102
Winter driving ..... 5-60
Snow tires ..... 5-60
Tire chains ..... 5-61
Wiper blades ..... 7-29
Wipers and washers ..... 4-82