Foreword

Congratulations on choosing a SUBARU vehicle. This Owner's Manual has all the information necessary to keep your SUBARU in excellent condition and to properly maintain the emission control system for minimizing emission pollutants. We urge you to read this manual carefully so that you may understand your vehicle and its operation. For information not found in this Owner's Manual, such as details concerning repairs or adjustments, please contact the dealer from whom you purchased your SUBARU or the nearest SUBARU dealer.

The information, specifications and illustrations found in this manual are those in effect at the time of printing. FUJI HEAVY INDUSTRIES LTD. reserves the right to change specifications and designs at any time without prior notice and without incurring any obligation to make the same or similar changes on vehicles previously sold. This Owner's Manual applies to all models and covers all equipment, including factory installed options. Some explanations, therefore may be for equipment not installed in your vehicle.

Please leave this manual in the vehicle at the time of resale. The next owner will need the information found herein.

FUJI HEAVY INDUSTRIES LTD., TOKYO, JAPAN

SUBARU is a registered trademark of FUJI HEAVY INDUSTRIES LTD.

© copyright 2005 FUJI HEAVY INDUSTRIES LTD.

This manual describes the following vehicle types.

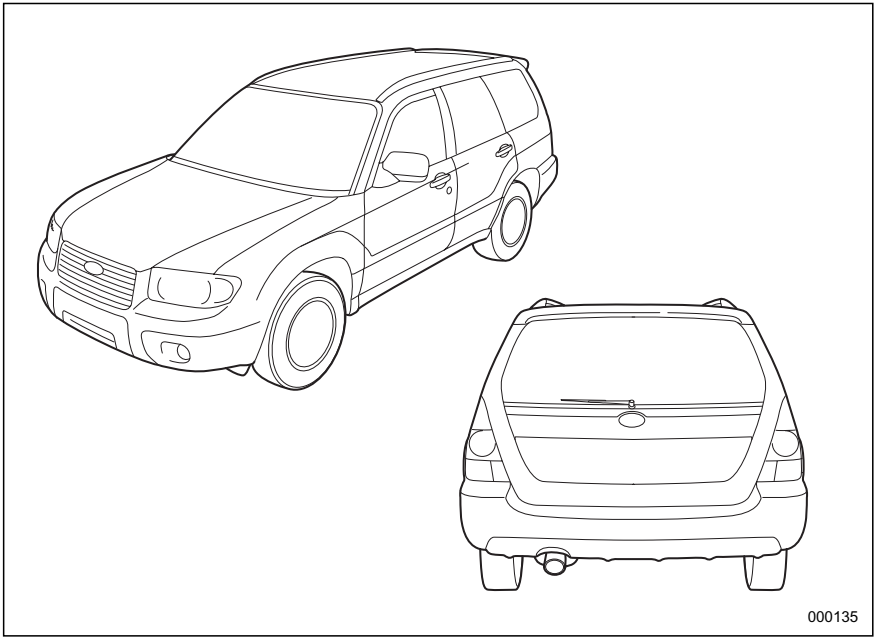

* The illustrated vehicle is one of the FORESTER series.

Warranties

■ Warranties for U.S.A.

All SUBARU vehicles distributed by Subaru of America, Inc. and sold at retail by an authorized SUBARU dealer in the United States come with the following warranties:

- SUBARU Limited Warranty
- Emission Control Systems Warranty
- Emissions Performance Warranty

All warranty information, including details of coverage and exclusions, is in the "Warranty and Maintenance Booklet". Please read these warranties carefully.

■ Warranties for Canada

All SUBARU vehicles distributed by Subaru Canada, Inc. and sold at retail by an authorized SUBARU dealer in Canada come with the following warranties:

- SUBARU Limited Warranty
- Anti-Corrosion Warranty
- Emission Control Warranty

All warranty information, including details of coverage and exclusions, is in the Warranty and Service Booklet. Please read these warranties carefully.

▼ 2.5XT (Canada model only)

⚠ CAUTION

2.5XT models are equipped with High Intensity Discharge (HID) headlights that contain mercury. For that reason, it is necessary to remove HID headlights before vehicle disposal. Once removed, please reuse, recycle or dispose of the HID headlights as hazardous waste.

▼ All models except Canada model 2.5XT

⚠ CAUTION

This vehicle does not contain mercury devices or parts.

How to use this owner's manual

■ Using your Owner's manual

Before you operate your vehicle, carefully read this manual. To protect yourself and extend the service life of your vehicle, follow the instructions in this manual. Failure to observe these instructions may result in serious injury and damage to your vehicle.

This manual is composed of fourteen chapters. Each chapter begins with a brief table of contents, so you can usually tell at a glance if that chapter contains the information you want.

Chapter 1: Seat, seatbelt and SRS airbags
This chapter informs you how to use the seat and seatbelt and contains precautions for the SRS airbags.
Chapter 2: Keys and doors
This chapter informs you how to operate the keys, locks and windows.
Chapter 3: Instruments and controls
This chapter informs you about the operation of instrument panel indicators and how to use the instruments and other switches.
Chapter 4: Climate Control
This chapter informs you how to operate

– CONTINUED –

the climate control.

Chapter 5: Audio

This chapter informs you how to operate your audio system.

Chapter 6: Interior equipment

This chapter informs you how to operate interior equipment.

Chapter 7: Starting and operating

This chapter informs you how to start and operate your SUBARU.

Chapter 8: Driving tips

This chapter informs you how to drive your SUBARU in various conditions and explains some safety tips on driving.

Chapter 9: In case of emergency

This chapter informs you what to do if you have a problem while driving, such as a flat tire or engine overheating.

Chapter 10: Appearance care

This chapter informs you how to keep your SUBARU looking good.

Chapter 11: Maintenance and service

This chapter informs you when you need to take your SUBARU to the dealer for scheduled maintenance and informs you how to keep your SUBARU running properly.

Chapter 12: Specifications

This chapter informs you about dimension and capacities of your SUBARU.

Chapter 13: Consumer information and Reporting safety defects

This chapter informs you about Uniform tire quality grading standards and Reporting safety defects.

Chapter 14: Index

This is an alphabetical listing of all that's in this manual. You can use it to quickly find something you want to read.

■ Safety warnings

You will find a number of WARNINGs, CAUTIONs and NOTEs in this manual.
These safety warnings alert you to potential hazards that could result in injury to you or others.
Please read these safety warnings as well as all other portions of this manual carefully in order to gain a better understanding of how to use your SUBARU vehicle safely.

⚠ WARNING

A WARNING indicates a situation in which serious injury or death could result if the warning is ignored.

⚠ CAUTION

A CAUTION indicates a situation in which injury or damage to your vehicle, or both, could result if the caution is ignored.

NOTE

A NOTE gives information or suggestions how to make better use of your vehicle.

■ Safety symbol

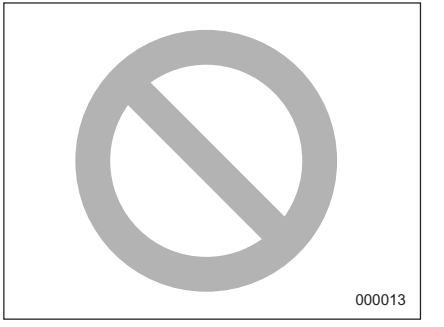

You will find a circle with a slash through it in this manual. This symbol means "Do not", "Do not do this", or "Do not let this happen", depending upon the context.

Vehicle symbols

There are some of the symbols you may see on your vehicle.

Mark	Name
	CAUTION
	Power door lock
	Passenger's windows lock
	Fuel
	Front fog lights
	Parking lights
	Hazard warning flasher
	Cigarette lighter
	Engine hood

Mark	Name
	Seat heater
	Child restraint top tether anchorages
	Child restraint lower anchorages
	Horn
	Windshield wiper deicer
	Wiper intermittent
	Windshield washer
PULL MIST	Windshield wiper mist (for single wipe)
REAR	Rear window wiper
	Rear window washer

Mark	Name
	Lights
	Parking lights, tail lights, license plate light and instrument panel illumination
	Head lights
	Headlight beam leveler
	Illumination brightness
	Fan speed
	Instrument panel outlets
	Instrument panel outlets and foot outlets
	Foot outlets
	Windshield defroster and foot outlets
	Windshield defroster

– CONTINUED –

Mark	Name
	Outside mirror defogger
	Rear window defogger
	Air recirculation
	Engine oil
	Washer
	Door lock (Transmitter)
	Door unlock (Transmitter)

Safety precautions when driving

■ Seatbelt and SRS airbag

⚠ WARNING

- **All persons in the vehicle should fasten their seatbelts BEFORE the vehicle starts to move. Otherwise, the possibility of serious injury becomes greater in the event of a sudden stop or accident.**
- **To obtain maximum protection in the event of an accident, the driver and all passengers in the vehicle should always wear seatbelts when the vehicle is moving. The SRS (Supplemental Restraint System) airbag does not do away with the need to fasten seatbelts. In combination with the seatbelts, it offers the best combined protection in case of a serious accident.**

  Not wearing a seatbelt increases the chance of severe injury or death in a crash even when the vehicle has the SRS airbag.
- **The SRS airbags deploy with considerable speed and force. Occupants who are out of proper position when the SRS airbag deploys could suffer very serious injuries. Because the SRS airbag needs enough space for deployment, the driver should always sit upright and well back in the seat as far from the steering wheel as practical while still maintaining full vehicle control and the front passenger should move the seat as far back as possible and sit upright and well back in the seat.**

Carefully read the sections “Seatbelts” and “*SRS airbag (Supplemental Restraint System airbag)” in chapter 1 of this owner’s manual for instructions and precautions concerning the seatbelt system and SRS airbag system.

■ Child safety

⚠ WARNING

- **Never hold a child on your lap or in your arms while the vehicle is moving. The passenger cannot protect the child from injury in a collision, because the child will be caught between the passenger and objects inside the vehicle.**
- **While riding in the vehicle, infants and small children should always be placed in the REAR seat in an infant or child restraint system which is appropriate for the child's age, height and weight. If a child is too big for a child restraint system, the child should sit in the REAR seat and be restrained using the seatbelts. According to accident statistics, children are safer when properly restrained in the rear seating positions than in the front seating positions. Never allow a child to stand up or kneel on the seat.**
- **Put children aged 12 and under in the REAR seat properly restrained at all times in a child restraint device or in a seatbelt. The SRS airbag deploys with considerable speed and force and can injure or even kill children, especially if they are 12 years of age and under and are not restrained or improperly restrained. Because children are lighter and weaker than adults, their risk being injured from deployment is greater.**
- **NEVER INSTALL A REARWARD FACING CHILD SEAT IN THE FRONT SEAT. DOING SO RISKS SERIOUS INJURY OR DEATH TO THE CHILD BY PLACING THE CHILD'S HEAD TOO CLOSE TO THE SRS AIRBAG.**
- **Always use the child safety locks whenever a child rides in the rear seat. Serious injury could result if a child accidentally opened the door and fell out. Refer to the "Child safety locks" section in chapter 2.**
- **Always lock the passenger's windows using the lock switch when children are riding in the vehicle. Failure to follow this procedure could result in injury to a child operating the power window. Refer to the "Windows" section in chapter 2.**
- **Never leave unattended children in the vehicle. They could accidentally injure themselves or others through inadvertent operation of the vehicle. Also, on hot or sunny days, temperature in a closed vehicle could quickly become high enough to cause severe or possibly fatal injuries to them.**

Carefully read the sections "Child restraint systems","*SRS airbag (Supplemental Restraint System airbag)", and "Seatbelts" in chapter 1 of this owner's manual for instructions and precautions concerning the child restraint system, seatbelt system and SRS airbag system.

– CONTINUED –

■ Engine exhaust gas (carbon monoxide)

⚠ WARNING

- **Never inhale engine exhaust gas. Engine exhaust gas contains carbon monoxide, a colorless and odorless gas which is dangerous, or even lethal, if inhaled.**
- **Always properly maintain the engine exhaust system to prevent engine exhaust gas from entering the vehicle.**
- **Never run the engine in a closed space, such as a garage, except for the brief time needed to drive the vehicle in or out of it.**
- **Avoid remaining in a parked vehicle for a lengthy time while the engine is running. If that is unavoidable, then use the ventilation fan to force fresh air into the vehicle.**
- **Always keep the front ventilator inlet grille free from snow, leaves or other obstructions to ensure that the ventilation system always works properly.**
- **If at any time you suspect that exhaust fumes are entering the vehicle, have the problem checked and corrected as soon as possible. If you must drive under these conditions, drive only with all windows fully open.**
- **Keep the rear gate closed while driving to prevent exhaust gas from entering the vehicle.**

■ Drinking and driving

⚠ WARNING

Drinking and then driving is very dangerous. Alcohol in the bloodstream delays your reaction and impairs your perception, judgment and attentiveness. If you drive after drinking – even if you drink just a little – it will increase the risk of being involved in a serious or fatal accident, injuring or killing yourself, your passengers and others. In addition, if you are injured in the accident, alcohol may increase the severity of that injury.

Please don't drink and drive.

Drunken driving is one of the most frequent causes of accidents. Since alcohol affects all people differently, you may have consumed too much alcohol to drive safely even if the level of alcohol in your blood is below the legal limit. The safest thing you can do is never drink and drive. However if you have no choice but to drive, stop drinking and sober up completely before getting behind the wheel.

■ Drugs and driving

⚠ WARNING

There are some drugs (over the counter and prescription) that can delay your reaction time and impair your perception, judgment and attentiveness. If you drive after taking them, it may increase your, your passengers' and other persons' risk of being involved in a serious or fatal accident.

If you are taking any drugs, check with your doctor or pharmacist or read the literature that accompanies the medication to determine if the drug you are taking can impair your driving ability. Do not drive after taking any medications that can make you drowsy or otherwise affect your ability to safely operate a motor vehicle. If you

have a medical condition that requires you to take drugs, please consult with your doctor.

Never drive if you are under the influence of any illicit mind-altering drugs. For your own health and well-being, we urge you not to take illegal drugs in the first place and to seek treatment if you are addicted to those drugs.

■ Driving when tired or sleepy

⚠ WARNING

When you are tired or sleepy, your reaction will be delayed and your perception, judgment and attentiveness will be impaired. If you drive when tired or sleepy, your, your passengers' and other persons' chances of being involved in a serious accident may increase.

Please do not continue to drive but instead find a safe place to rest if you are tired or sleepy. On long trips, you should make periodic rest stops to refresh yourself before continuing on your journey. When possible, you should share the driving with others.

■ Modification of your vehicle

⚠ CAUTION

Your vehicle should not be modified. Modification could affect its performance, safety or durability, and may even violate governmental regulations. In addition, damage or performance problems resulting from modification may not be covered under warranties.

■ Car phone/cell phone and driving

⚠ CAUTION

Do not use a car phone/cell phone while driving; it may distract your attention from driving and can lead to an accident. If you use a car phone/cell phone, pull off the road and park in a safe place before using your phone. In some States/Provinces, only hands-free phones may legally be used while driving.

■ Driving with pets

Unrestrained pets can interfere with your driving and distract your attention from driving. In a collision or sudden stop, unrestrained pets or cages can be thrown around inside the vehicle and hurt you or your passengers. Besides, the pets can be hurt under these situations. It is also for their own safety that pets should be properly restrained in your vehicle. Restrain a pet with a special traveling harness which can be secured to the rear seat with a seatbelt or use a pet carrier which can be secured to the rear seat by routing a seatbelt through the carrier's handle. Never restrain pets or pet carriers in the front passenger's seat. For further information, consult your veterinarian, local animal protection society or pet shop.

■ Tire pressures

Check and, if necessary, adjust the pressure of each tire (including the spare) at least once a month and before any long journey.

Check the tire pressure when the tires are cold. Use a pressure gauge to adjust the tire pressures to the values shown on the tire placard.

Refer to the "Tires and wheels" section in chapter 11 for detailed information.

– CONTINUED –

⚠ WARNING

Driving at high speeds with excessively low tire pressures can cause the tires to deform severely and to rapidly become hot. A sharp increase in temperature could cause tread separation, and destruction of the tires. The resulting loss of vehicle control could lead to an accident.

■ California proposition 65 warning

⚠ WARNING

Engine exhaust, some of its constituents, and certain vehicle components contain or emit chemicals known to the State of California to cause cancer and birth defects or other reproductive harm. In addition, certain fluids in vehicles and certain components of product wear contain or emit chemicals known to the State of California to cause cancer and birth defects or other reproductive harm.

Table of contents

Seat, seatbelt and SRS airbags	*1*
Keys and doors	*2*
Instruments and controls	*3*
Climate control	*4*
Audio	*5*
Interior equipment	*6*
Starting and operating	*7*
Driving tips	*8*
In case of emergency	*9*
Appearance care	*10*
Maintenance and service	*11*
Specifications	*12*
Consumer information and Reporting safety defects	*13*
Index	*14*

Illustrated index

■ Exterior

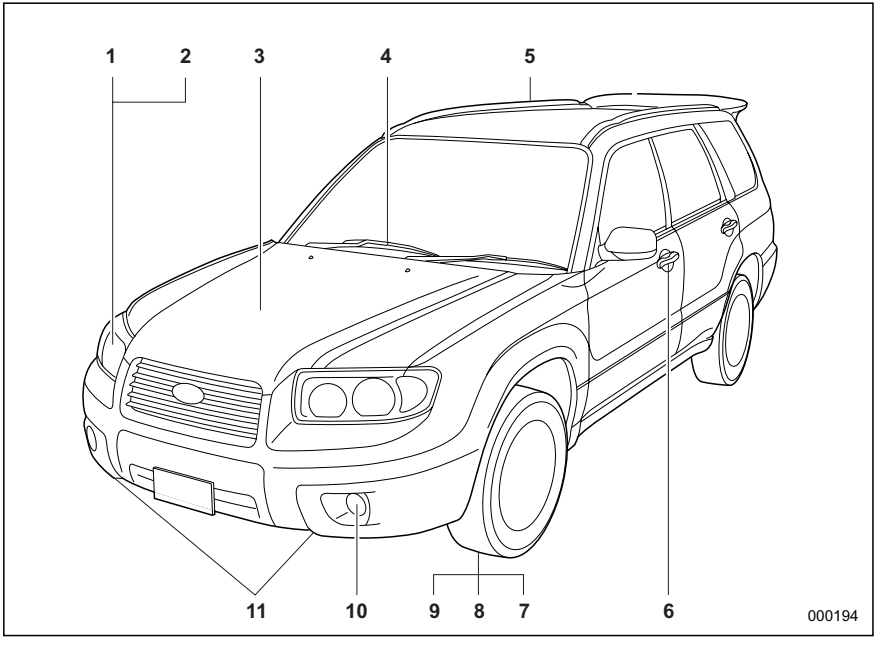

1) Headlight switch (page 3-18)
2) Replacing bulbs (page 11-43)
3) Engine hood (page 11-4)
4) Wiper switch (page 3-23)
5) Roof rails (page 8-13)
6) Door locks (page 2-4)
7) Tire pressure (page 11-30)
8) Flat tires (page 9-3)
9) Tire chains (page 8-10)
10) Front fog light button (page 3-21)
11) Tie-down/Towing hooks (page 9-11)

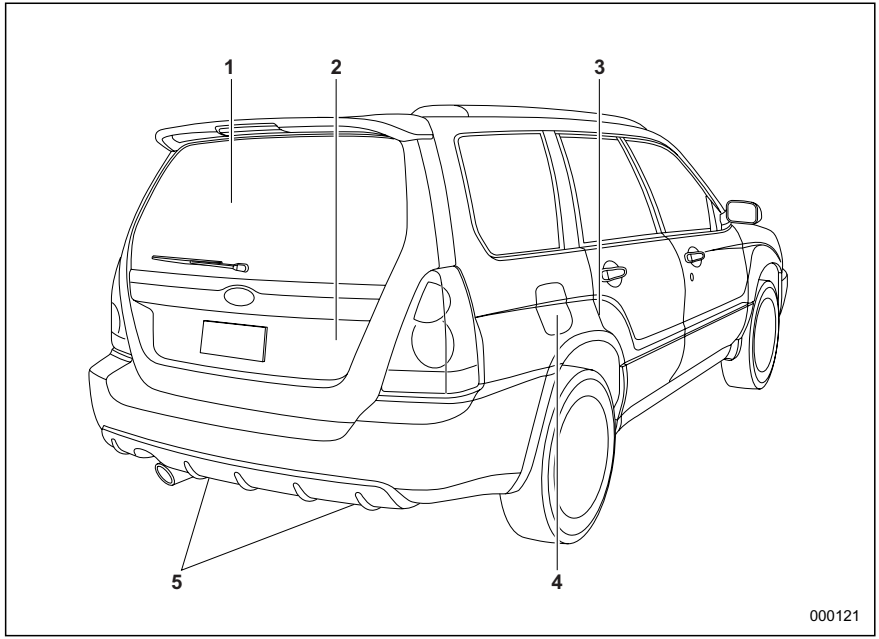

1) Rear window defogger button (page 3-25)
2) Rear gate (page 2-20)
3) Child safety locks (page 2-17)
4) Fuel filler lid and cap (page 7-3)
5) Tie-down/Towing hook (page 9-11)

– CONTINUED –

■ Interior

▼ Passenger compartment area

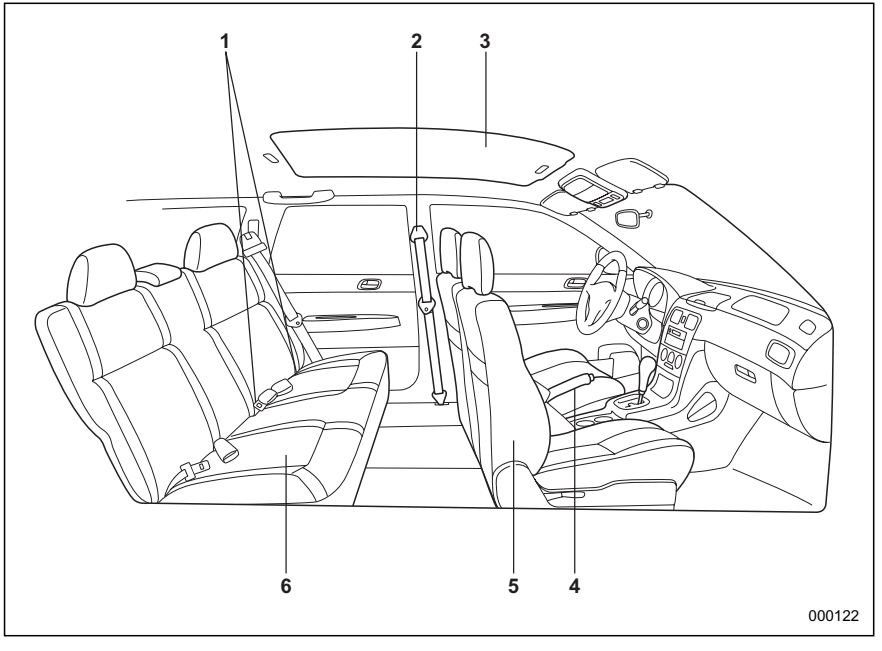

1) Lower anchorage for child restraint system (page 1-31)
2) Seatbelt (page 1-10)
3) Moonroof (page 2-21)
4) Parking brake lever (page 7-24)
5) Front seat (page 1-2)
6) Rear seat (page 1-7)

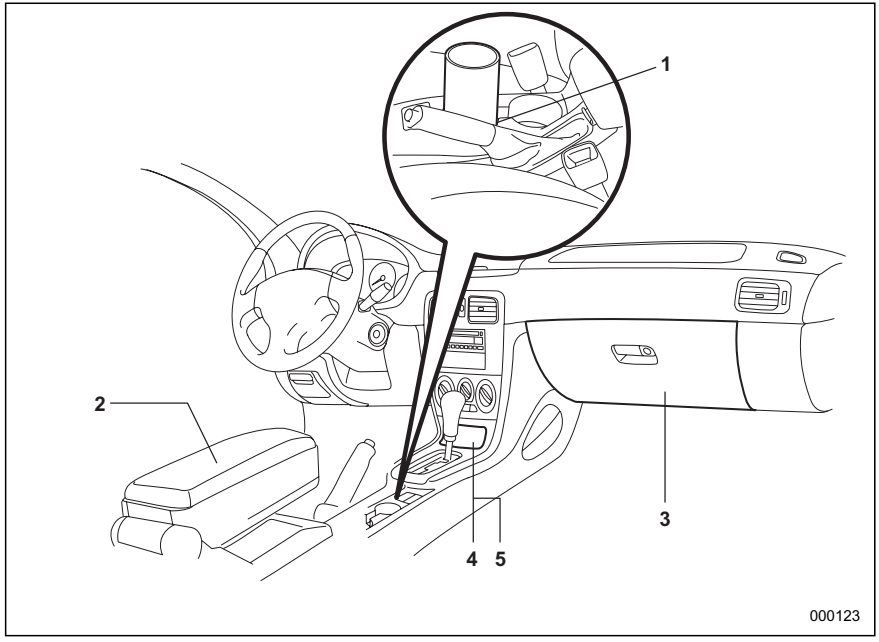

1) Cup holder (page 6-7)
2) Center console (page 6-4)
3) Glove box (page 6-4)
4) Cigarette lighter socket (page 6-9)
5) Ashtray (page 6-11)

– CONTINUED –

■ Instrument panel

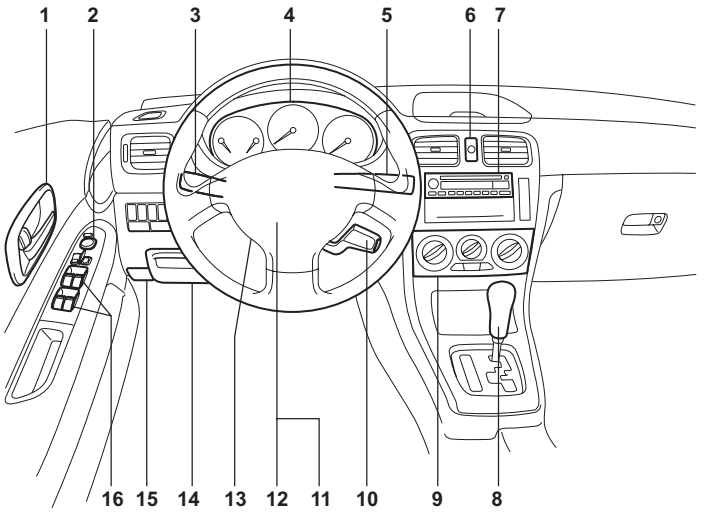

1) Door locks (page 2-4)
2) Outside mirror switch (page 3-28)
3) Light control lever (page 3-18)
4) Combination meter (page 3-6)
5) Wiper control lever (page 3-22)
6) Hazard warning flasher switch (page 3-6)
7) Audio (page 5-1)
8) Gear shift lever (MT) (page 7-9)/Selector lever (AT) (page 7-10)
9) Climate control (page 4-1)
10) Cruise control (page 7-26)
11) Horn (page 3-30)
12) SRS airbag (page 1-36)
13) Tilt steering (page 3-29)
14) Fuse (page 11-40)
15) Hood lock release knob (page 11-4)
16) Power windows (page 2-18)

■ Light control and wiper control levers/switches

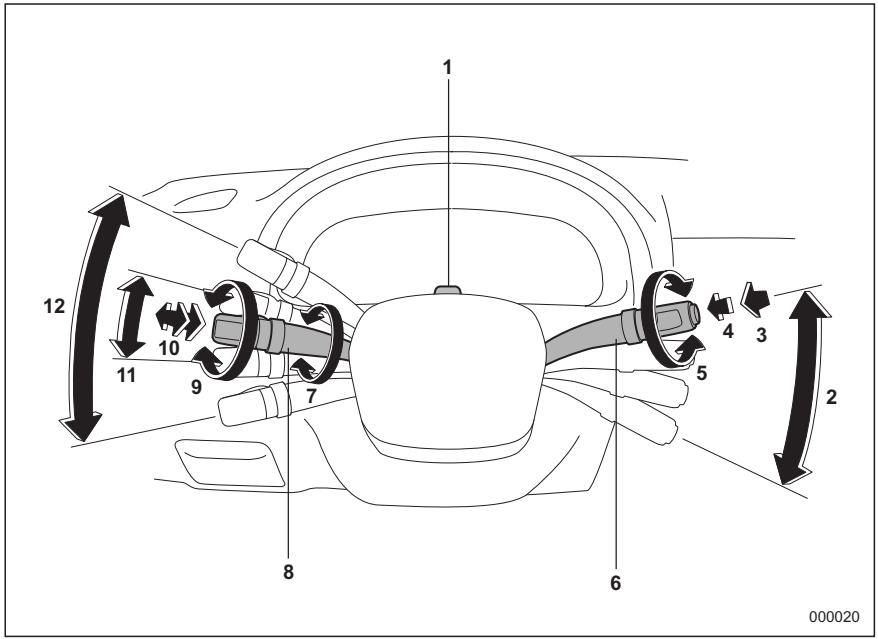

1) Parking light switch (page 3-21)
2) Windshield wiper (page 3-23)
3) Mist (page 3-24)
4) Windshield washer (page 3-24)
5) Rear window wiper and washer switch (page 3-24)
6) Wiper control lever (page 3-23)
7) Illumination brightness control (page 3-20)
8) Light control lever (page 3-18)
9) Headlight ON/OFF (page 3-18)
10) Headlight flasher High/Low beam change (page 3-18)
11) Turn signal (for lane change) (page 3-20)
12) Turn signal (page 3-20)

– CONTINUED –

■ Combination meter

▼ U.S.-spec. models

▽ AT vehicles

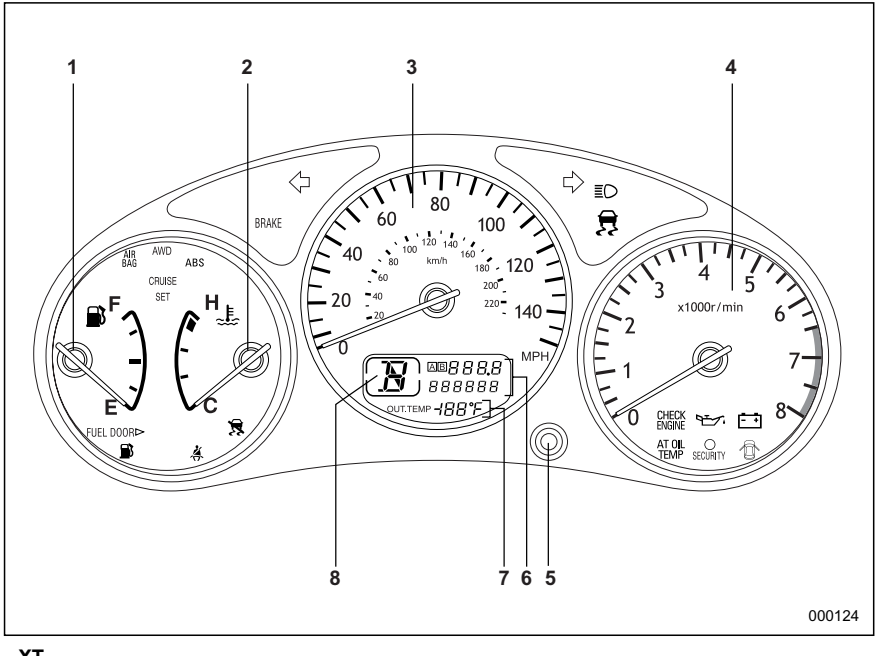

1) Fuel gauge (page 3-7)
2) Temperature gauge (page 3-8)
3) Speedometer (page 3-6)
4) Tachometer (page 3-7)
5) Trip meter A/B selection and trip meter reset knob (page 3-6)
6) Odometer and trip meter (page 3-6)
7) Outside temperature indicator (page 3-8)
8) Select lever position indicator (page 3-15)

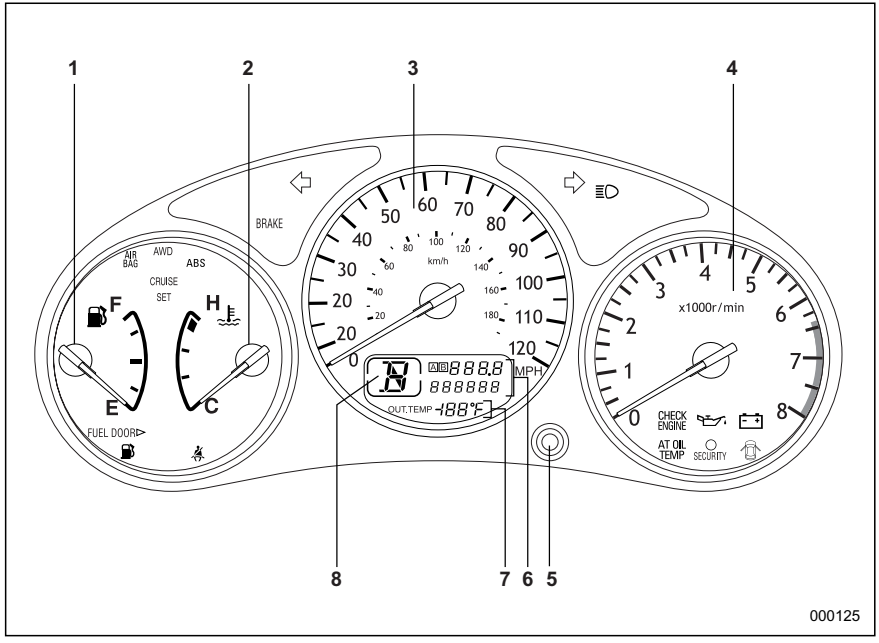

X, XS, L.L.Bean

1) Fuel gauge (page 3-7)
2) Temperature gauge (page 3-8)
3) Speedometer (page 3-6)
4) Tachometer (page 3-7)
5) Trip meter A/B selection and trip meter reset knob (page 3-6)
6) Odometer and trip meter (page 3-6)
7) Outside temperature indicator (page 3-8)
8) Select lever position indicator (page 3-15)

– CONTINUED –

▽ **MT vehicles**

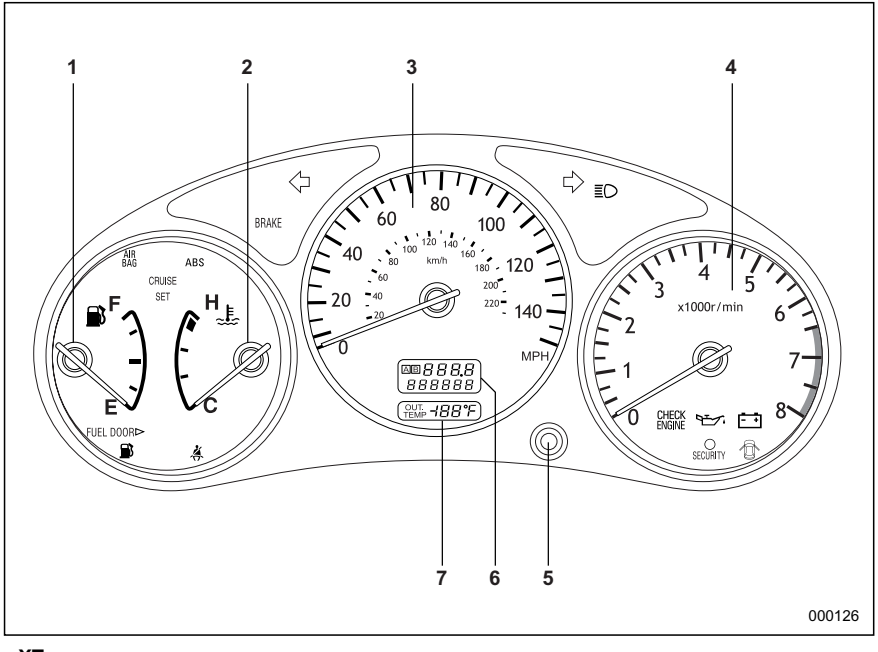

XT

1) Fuel gauge (page 3-7)
2) Temperature gauge (page 3-8)
3) Speedometer (page 3-6)
4) Tachometer (page 3-7)
5) Trip meter A/B selection and trip meter reset knob (page 3-6)
6) Odometer and trip meter (page 3-6)
7) Outside temperature indicator (page 3-8)

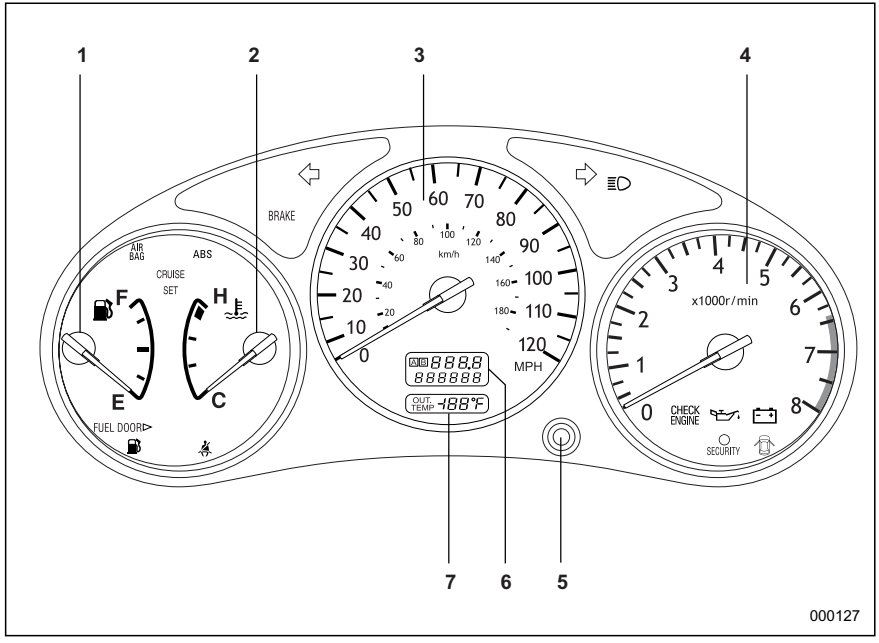

X, XS, L.L.Bean

1) Fuel gauge (page 3-7)
2) Temperature gauge (page 3-8)
3) Speedometer (page 3-6)
4) Tachometer (page 3-7)
5) Trip meter A/B selection and trip meter reset knob (page 3-6)
6) Odometer and trip meter (page 3-6)
7) Outside temperature indicator (page 3-8)

– CONTINUED –

▼ **Canada-spec. models**

▽ **AT vehicles**

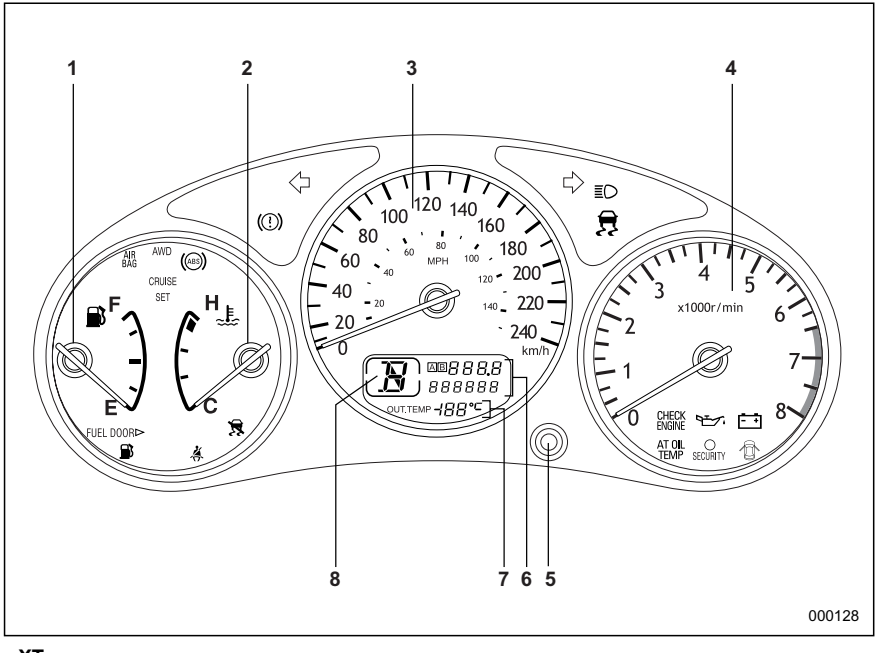

XT

1) Fuel gauge (page 3-7)
2) Temperature gauge (page 3-8)
3) Speedometer (page 3-6)
4) Tachometer (page 3-7)
5) Trip meter A/B selection and trip meter reset knob (page 3-6)
6) Odometer and trip meter (page 3-6)
7) Outside temperature indicator (page 3-8)
8) Select lever position indicator (page 3-15)

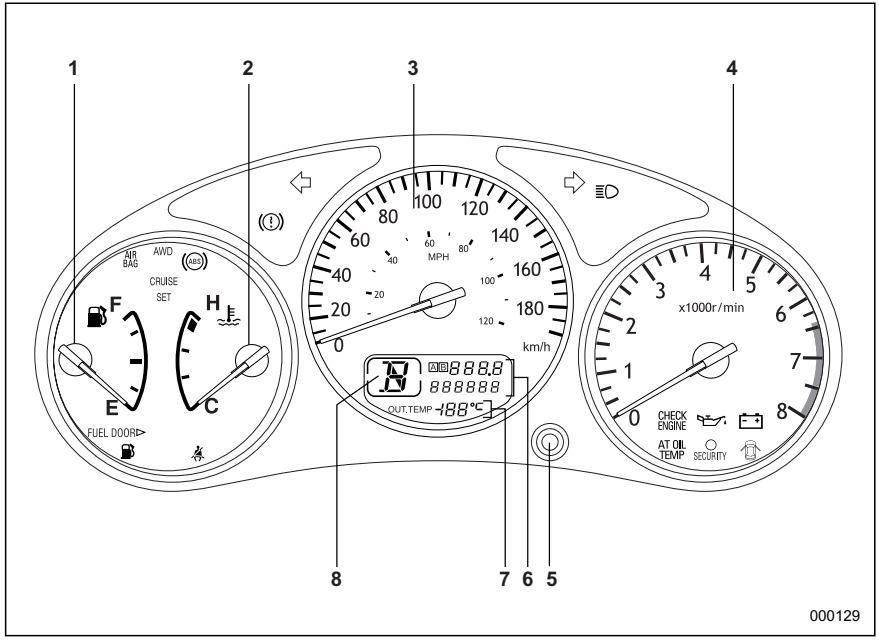

X, XS, L.L.Bean

1) Fuel gauge (page 3-7)
2) Temperature gauge (page 3-8)
3) Speedometer (page 3-6)
4) Tachometer (page 3-7)
5) Trip meter A/B selection and trip meter reset knob (page 3-6)
6) Odometer and trip meter (page 3-6)
7) Outside temperature indicator (page 3-8)
8) Select lever position indicator (page 3-15)

– CONTINUED –

▽ **MT vehicles**

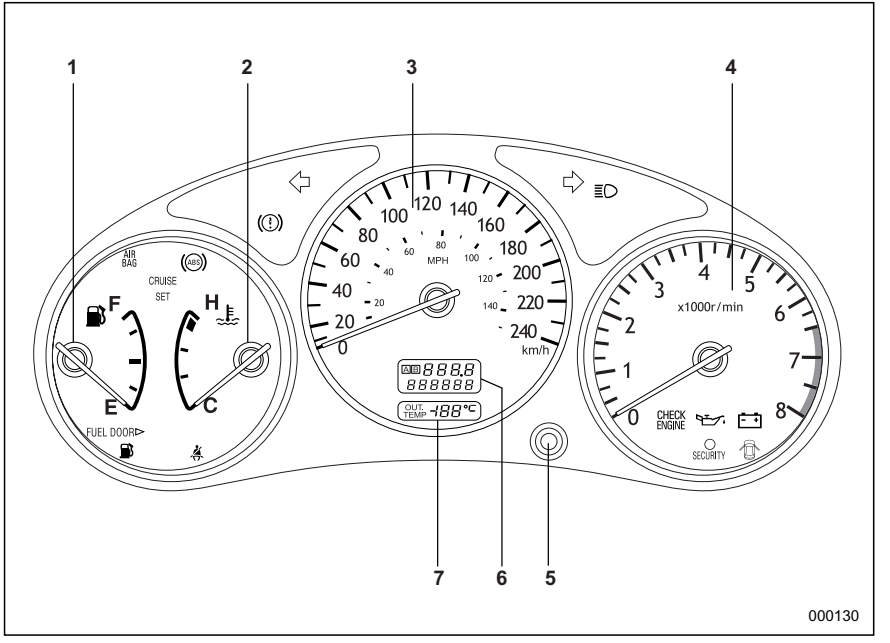

XT

1) Fuel gauge (page 3-7)
2) Temperature gauge (page 3-8)
3) Speedometer (page 3-6)
4) Tachometer (page 3-7)
5) Trip meter A/B selection and trip meter reset knob (page 3-6)
6) Odometer and trip meter (page 3-6)
7) Outside temperature indicator (page 3-8)

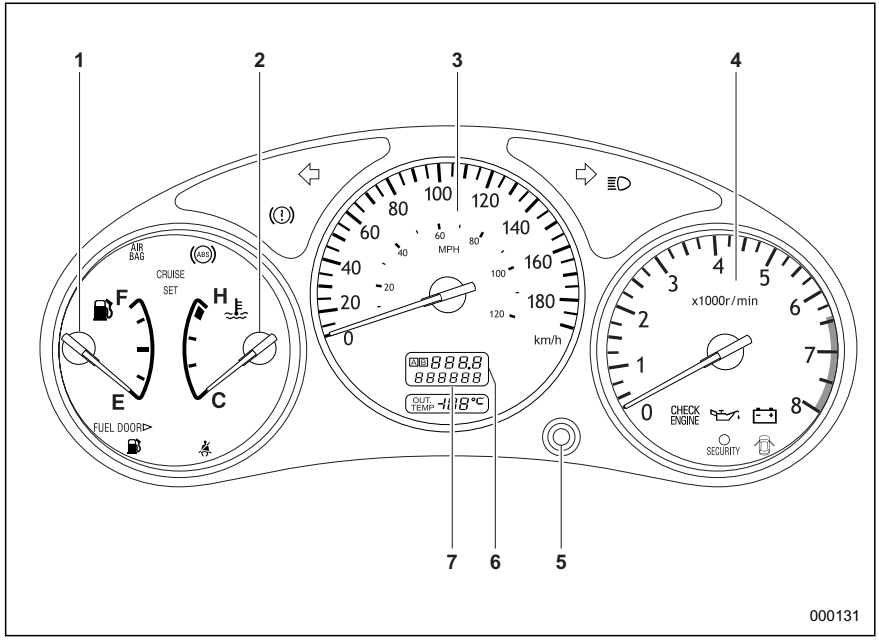

X, XS, L.L.Bean

1) Fuel gauge (page 3-7)
2) Temperature gauge (page 3-8)
3) Speedometer (page 3-6)
4) Tachometer (page 3-7)
5) Trip meter A/B selection and trip meter reset knob (page 3-6)
6) Odometer and trip meter (page 3-6)
7) Outside temperature indicator (page 3-8)

– CONTINUED –

▼ Warning and indicator light

Mark	Name	Page
	Seatbelt warning light	3-9
AIR BAG	SRS airbag system warning light	3-10
PASS AIR BAG ON or 2	Front passenger's frontal airbag ON indicator light	3-10
PASS AIR BAG OFF or 2	Front passenger's frontal airbag OFF indicator light	3-10
CHECK ENGINE	CHECK ENGINE warning light/Malfunction indicator lamp	3-11
	Charge warning light	3-12
	Oil pressure warning light	3-12
AT OIL TEMP	AT OIL temperature warning light (AT vehicles)	3-12
ABS or (ABS)	ABS warning light	3-12

Mark	Name	Page
BRAKE or (!)	Brake system warning light	3-14
	Door open warning light	3-15
AWD	All-Wheel Drive warning light (AT vehicles)	3-15
	Low fuel warning light	3-15
	Turn signal indicator lights	3-16
	High beam indicator light	3-16
SECURITY	Security indicator light (if equipped)	2-3
CRUISE	Cruise control indicator light (if equipped)	3-16
SET	Cruise control set indicator light (if equipped)	3-17
	Vehicle Dynamics Control operation indicator light (if equipped)	3-16

Mark	Name	Page
	Vehicle Dynamics Control warning light/ Vehicle Dynamics Control OFF indicator light (if equipped)	3-13

■ Tire changing tools

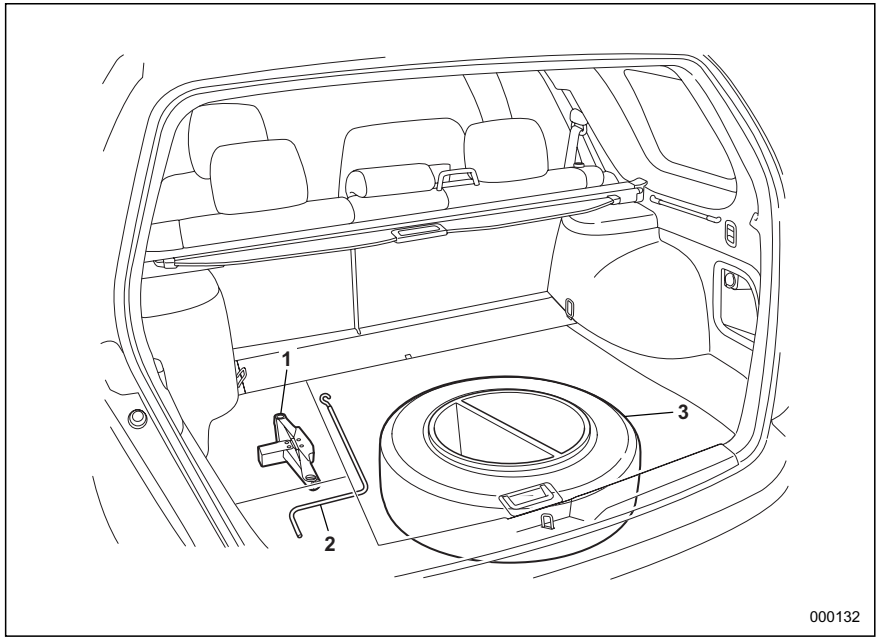

1) Jack (page 9-15)
2) Jack handle (page 9-15)
3) Spare tire (page 9-3)

– CONTINUED –

■ Cargo area cover

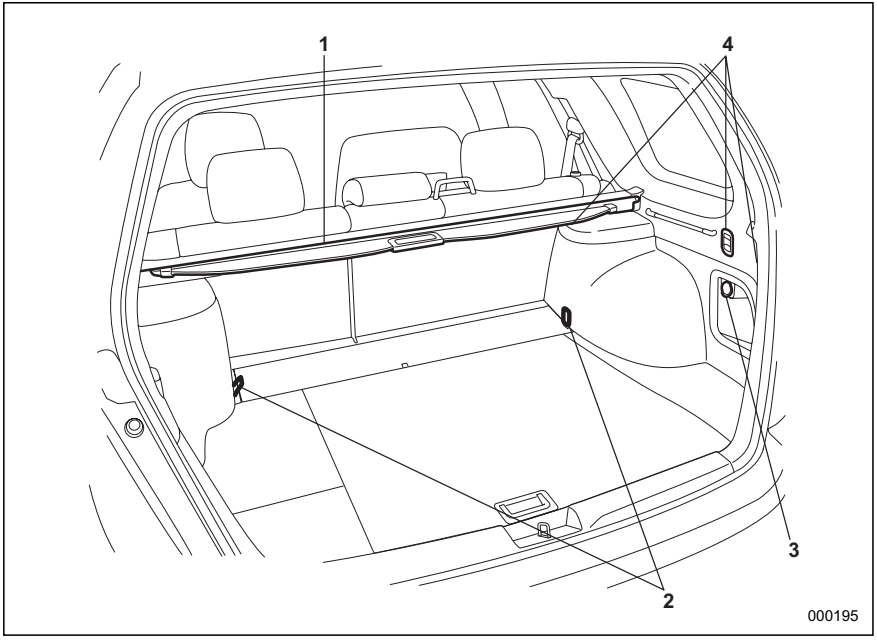

1) Cargo area cover (page 6-12)
2) Cargo tie-down hook (page 6-14)
3) Accessory power outlet (page 6-8)
4) Shopping bag hook (page 6-13)

Front seats 1-2
- Manual seat 1-3
- Power seat (if equipped) 1-4
- Lumbar support (Driver's seat only) 1-5
- Head restraint adjustment 1-5
- Active head restraint 1-6

Seat heater (if equipped) 1-6

Rear seats 1-7
- Head restraint adjustment 1-7
- Folding down the rear seatback 1-8

Armrest (if equipped) 1-9

Seatbelts 1-10
- Seatbelt safety tips 1-10
- Emergency Locking Retractor (ELR) 1-11
- Automatic/Emergency Locking Retractor (A/ELR) 1-11
- Seatbelt warning light and chime 1-12
- Fastening the seatbelt 1-12
- Seatbelt maintenance 1-19

Seatbelt extender 1-19

Front seatbelt pretensioners 1-20
- System monitors 1-22
- System servicing 1-23
- Precautions against vehicle modification 1-23

Child restraint systems 1-24
- Where to place a child restraint system 1-25
- Choosing a child restraint system 1-26
- Installing child restraint systems with A/ELR seatbelt 1-27
- Installing a booster seat 1-30
- Installation of child restraint systems by use of lower and tether anchorages (LATCH) 1-31
- Top tether anchorages 1-34

***SRS airbag (Supplemental Restraint System airbag)** 1-36
- Vehicle with driver's and front passenger's SRS airbags and lap/shoulder restraints 1-36
- Subaru advanced frontal airbag system 1-41
- SRS side airbag (if equipped) 1-53
- SRS airbag system monitors 1-58
- SRS airbag system servicing 1-59
- Precautions against vehicle modification 1-60

Front seats

⚠ WARNING

- **Never adjust the seat while driving to avoid the possibility of loss of vehicle control and of personal injury.**
- **Before adjusting the seat, make sure the hands and feet of rear seat passengers are clear of the adjusting mechanism.**
- **Seatbelts provide maximum restraint when the occupant sits well back and upright in the seat. To reduce the risk of sliding under the seatbelt in a collision, the front seatbacks should be always used in the upright position while the vehicle is running. If the front seatbacks are not used in the upright position in a collision, the risk of sliding under the lap belt and of the lap belt sliding up over the abdomen will increase, and both can result in serious internal injury or death.**
- **The SRS airbags deploy with considerable speed and force. Occupants who are out of proper position when the SRS airbag deploys could suffer very serious injuries. Because the SRS airbag needs enough space for deployment, the driver should always sit upright and well back in the seat as far from the steering wheel as practical while still maintaining full vehicle control and the front passenger should move the seat as far back as possible and sit upright and well back in the seat.**

⚠ WARNING

Put children aged 12 and under in the rear seat properly restrained at all times. The SRS airbag deploys with considerable speed and force and can injure or even kill children, especially if they are 12 years of age and under and are not restrained or improperly restrained. Because children are lighter and weaker than adults, their risk of being injured from deployment is greater. Consequently, we strongly recommend that ALL children (including those in child seats and those that have outgrown child restraint devices) sit in the REAR seat properly restrained at all times in a child restraint device or in a seatbelt, whichever is appropriate for the child's age, height and weight. Secure ALL types of child restraint devices (including forward facing child seat) in the REAR seats at all times.

NEVER INSTALL A REARWARD FACING CHILD SEAT IN THE FRONT SEAT. DOING SO RISKS SERIOUS INJURY OR DEATH TO THE CHILD BY PLACING THE CHILD'S HEAD TOO CLOSE TO THE SRS AIRBAG.

According to accident statistics, children are safer when properly restrained in the rear seating positions than in the front seating positions. For instructions and precautions concerning child restraint systems, see the "Child restraint systems" section in this chapter.

■ Manual seat

▼ Fore and aft adjustment

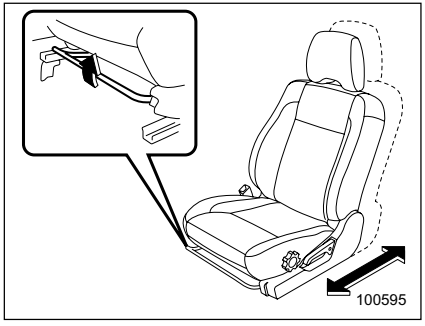

Pull the lever upward and slide the seat to the desired position. Then release the lever and move the seat back and forth to make sure that it is securely locked into place.

▼ Reclining the seatback

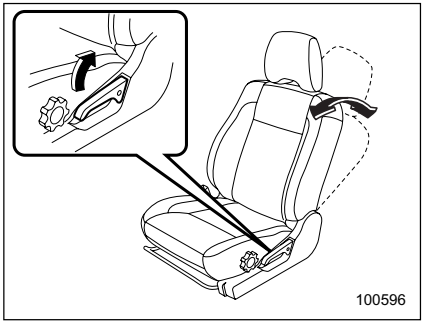

Pull the reclining lever up and adjust the seatback to the desired position. Then release the lever and make sure the seatback is securely locked into place.
The seatback placed in a reclined position can spring back upward with force when released. When operating the reclining lever to return the seatback, hold it lightly so that it may be raised back gradually.

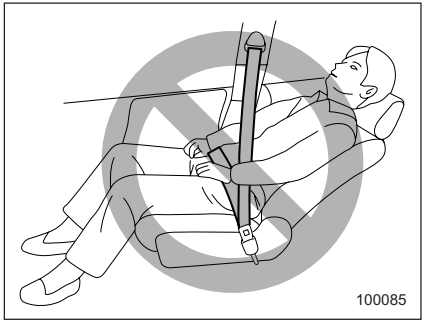

⚠ WARNING

To prevent the passenger from sliding under the seatbelt in the event of a collision, always put the seatback in the upright position while the vehicle is in motion. Also, do not place objects such as cushions between the passenger and the seatback. If you do so, the risk of sliding under the lap belt and of the lap belt sliding up over the abdomen will increase, and both can result in serious internal injury or death.

– CONTINUED –

▼ Seat height adjustment (driver's seat)

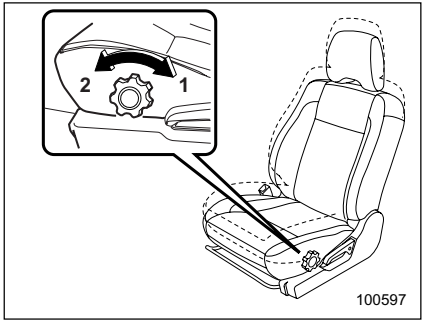

1) Turn the dial backward to lower the seat.
2) Turn the dial forward to raise the seat.

Use the adjusting dial to adjust the height of the seat.

■ Power seat (if equipped)

▼ Fore and aft adjustment

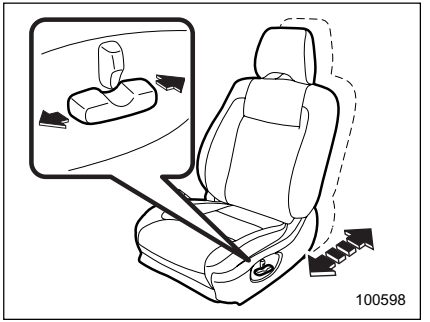

To adjust the seat forward or backward, move the control switch forward or backward.

▼ Seat cushion angle adjustment

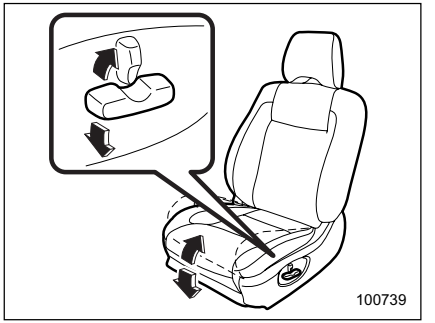

To adjust the seat cushion angle, pull up or push down the front end of the control switch.

▼ Seat height adjustment

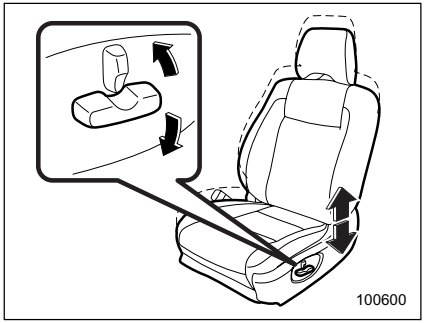

To adjust the seat height, pull up or push down the rear end of the control switch.

▼ **Reclining the seatback**

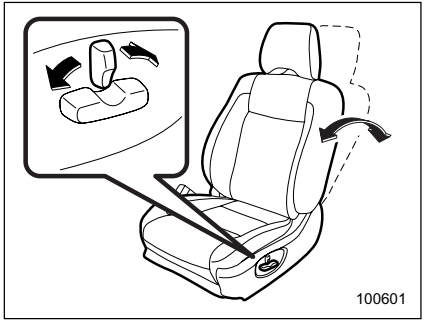

To adjust the angle of the seatback, move the control switch forward or backward.

■ Lumbar support (Driver's seat only)

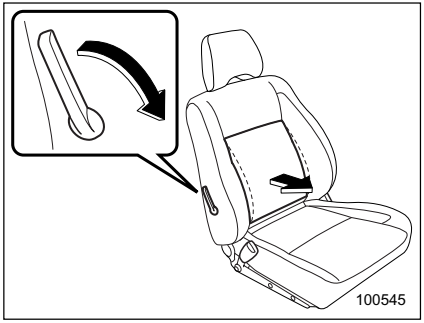

Pull the lever forward or backward.
Pulling the lever forward will increase the amount of support for your lower back.

■ Head restraint adjustment

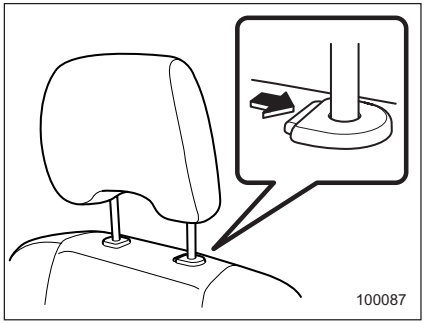

To raise the head restraint, pull it up.
To lower it, push the head restraint down while pressing the release button on the top of the seatback.
The head restraint should be adjusted so that the center of the head restraint is closest to the top of the occupant's ears.

⚠ WARNING

Never drive the vehicle with the head restraints removed because they are designed to reduce the risk of serious neck injury in the event that the vehicle is struck from the rear.

– CONTINUED –

■ Active head restraint

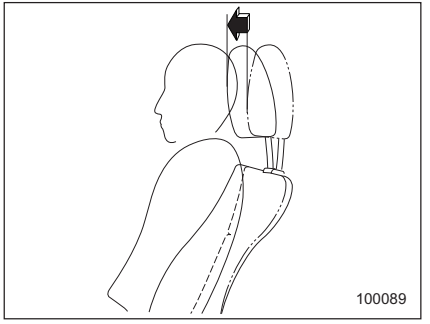

The front seats of your vehicle are equipped with active head restraints. They automatically tilt forward slightly in the event the vehicle is struck from the rear, decreasing the amount of rearward head movement and thus reducing the risk of whiplash. For maximum effectiveness the head restraint should be adjust so that the center of the head restraint is closest to the top of the occupant's ears.

⚠ CAUTION

- **Each active head restraint is effective only when its height is properly adjusted and the driver/passenger sits in the correct position on the seat.**
- **If your vehicle is involved in a rear-end collision, have an authorized SUBARU dealer inspect the active head restraints.**
- **The active head restraints may not operate in the event the vehicle experiences only a slight impact in the rear.**
- **The active head restraints may be damaged if they are pushed hard from behind or subjected to shock. As a result, they may not function if the vehicle suffers a rear impact.**

Seat heater (if equipped)

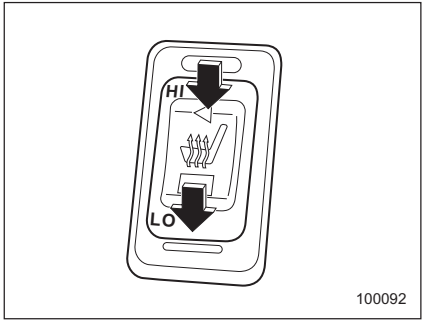

HI – Rapid heating
LO – Normal heating

The seat heater operates when the ignition switch is either in the "ACC" or "ON" position.

To turn on the seat heater, push the "LO" or "HI" position on the switch, as desired, depending on the temperature. Selecting the "HI" position will cause the seat to heat up quicker.

The indicator located on the switch comes on when the seat heater is in operation. When the vehicle's interior is warmed enough or before you leave the vehicle, be sure to turn the switch off.

⚠ CAUTION

- **There is a possibility that people with delicate skin may suffer slight burns even at low temperatures if he/she uses the seat heater for a long period of time. When using the heater, always be sure to warn the persons concerned.**
- **Do not put anything on the seat which insulates against heat, such as a blanket, cushion, or similar items. This may cause the seat heater to overheat.**

NOTE

Use of the seat heater for a long period of time while the engine is not running can cause battery discharge.

Rear seats

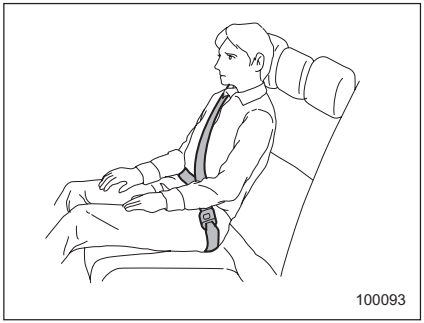

⚠ WARNING

Seatbelts provide maximum restraint when the occupant sits well back and upright in the seat. Do not put cushions or any other materials between occupants and seatbacks or seat cushions. If you do so, the risk of sliding under the lap belt and of the lap belt sliding up over the abdomen will increase, and both can result in serious internal injury or death.

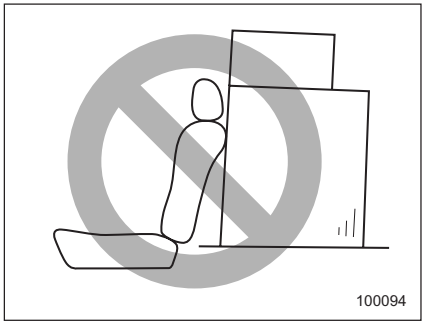

⚠ WARNING

Never stack luggage or other cargo higher than the top of the seatback because it could tumble forward and injure passengers in the event of a sudden stop or accident.

■ Head restraint adjustment

⚠ WARNING

Never drive the vehicle with the head restraints removed because they are designed to reduce the risk of serious neck injury in the event that the vehicle is struck from the rear.

– CONTINUED –

▼ **Rear windows side seating position**

CAUTION

The head restraint is not intended to be used at the lowest position. Before sitting on the seat, raise the head restraint to the click position depending on your sitting height.

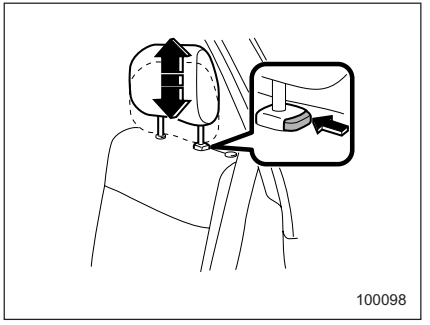

To raise the head restraint, pull it up.
To lower it, push the head restraint down while pressing the release button on the top of the seatback.

When the seats are not occupied, lower the head restraint to improve rearward visibility.

▼ **Rear center seating position**

CAUTION

The head restraint is not intended to be used at the lowest position. Before sitting on the seat, raise the head restraint to the click position depending on your sitting height.

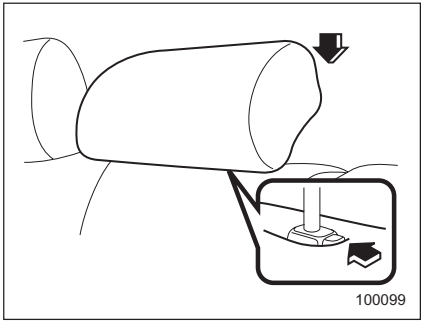

To raise the head restraint, pull it up.
To lower it, push the head restraint down while pressing the release button on the top of the seatback.

When the rear center seating position is occupied, place the head restraint to the click position. When the rear center seating position is not occupied, lower the head restraint to improve rearward visibility.

■ Folding down the rear seatback

WARNING

- **After returning the rear seatback to its original position, make certain that the shoulder belts are fully visible.**
- **Never allow passengers to ride on the folded rear seatback or in the cargo area. Doing so may result in serious injury or death.**
- **Secure lengthy items properly to prevent them from shooting forward and causing serious injury during a sudden stop.**

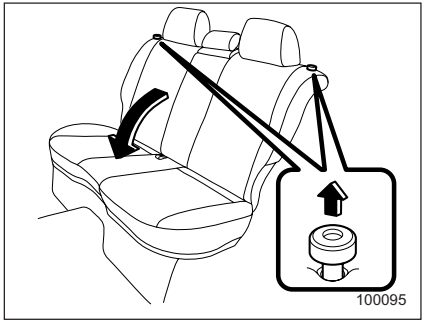

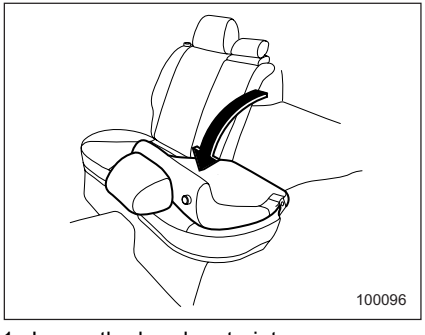

1. Lower the head restraints.
2. Unlock the seatback by pulling the release knob and then fold the seatback down.

To return the seatback to its original position, raise the seatback until it locks into place and make sure that it is securely locked.

Armrest (if equipped)

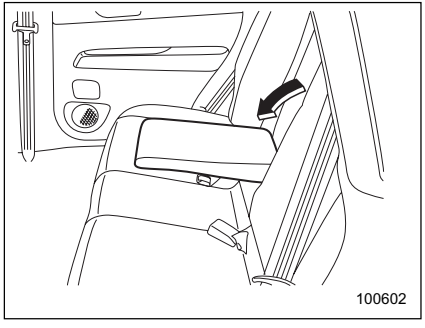

To lower the armrest, pull on the top edge of the armrest.

WARNING

To avoid the possibility of serious injury, passengers must never be allowed to sit on the center armrest while the vehicle is in motion.

Seatbelts

■ Seatbelt safety tips

⚠ WARNING

- **All persons in the vehicle should fasten their seatbelts BEFORE the vehicle starts to move. Otherwise, the possibility of serious injury becomes greater in the event of a sudden stop or accident.**
- **All belts should fit snugly in order to provide full restraint. Loose fitting belts are not as effective in preventing or reducing injury.**
- **Each seatbelt is designed to support only one person. Never use a single belt for two or more persons – even children. Otherwise, in an accident, serious injury or death could result.**
- **Replace all seatbelt assemblies including retractors and attaching hardware worn by occupants of a vehicle that has been in a serious accident. The entire assembly should be replaced even if damage is not obvious.**
- **Put children aged 12 and under in the rear seat properly restrained at all times. The SRS airbag deploys with considerable speed and force and can injure or even kill children, especially if they are 12 years of age and under and are not restrained or improperly restrained. Because children are lighter and weaker than adults, their risk of being injured from deployment is greater. Consequently, we strongly recommend that ALL children (including those in child seats and those that have outgrown child restraint devices) sit in the REAR seat properly restrained at all times in a child restraint device or in a seatbelt, whichever is appropriate for the child's height and weight.**

  Secure ALL types of child restraint devices (including forward facing child seats) in the REAR seats at all times.

  NEVER INSTALL A REARWARD FACING CHILD SEAT IN THE FRONT SEAT. DOING SO RISKS SERIOUS INJURY OR DEATH TO THE CHILD BY PLACING THE CHILD'S HEAD TOO CLOSE TO THE SRS AIRBAG.

  According to accident statistics, children are safer when properly restrained in the rear seating positions than in the front seating positions. For instructions and precautions concerning the child restraint system, see the "Child restraint systems" section in this chapter.

Your vehicle is equipped with a crash sensing and diagnostic module, which will record the use of the seatbelt(s) by the driver and/or front passenger when any of the SRS frontal and side airbags deploys.

▼ Infants or small children

Use a child restraint system that is suitable for your vehicle. See information on "Child restraint systems" in this chapter.

▼ Children

If a child is too big for a child restraint system, the child should sit in the rear seat and be restrained using the seatbelts. Ac-

cording to accident statistics, children are safer when properly restrained in the rear seating positions than in the front seating positions. Never allow a child to stand up or kneel on the seat.

If the shoulder portion of the belt crosses the face or neck, adjust the shoulder belt anchor height (window-side seating positions only) and then if necessary move the child closer to the belt buckle to help provide a good shoulder belt fit. Care must be taken to securely place the lap belt as low as possible on the hips and not on the child's waist. If the shoulder portion of the belt cannot be properly positioned, a child restraint system should be used. Never place the shoulder belt under the child's arm or behind the child's back.

▼ **Expectant mothers**

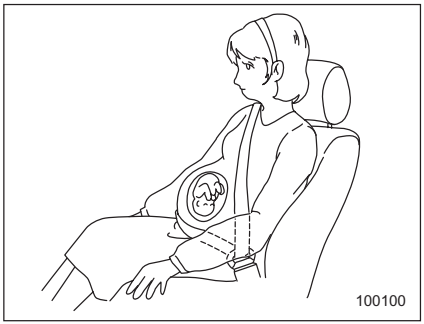

Expectant mothers also need to use the seatbelts. They should consult their doctor for specific recommendations. The lap belt should be worn securely and as low as possible over the hips, not over the waist.

■ Emergency Locking Retractor (ELR)

The driver's seatbelt has an Emergency Locking Retractor (ELR).
The emergency locking retractor allows normal body movement but the retractor locks automatically during a sudden stop, impact or if you pull the belt very quickly out of the retractor.

■ Automatic/Emergency Locking Retractor (A/ELR)

Each passenger's seatbelt has an Automatic/Emergency Locking Retractor (A/ELR). The Automatic/Emergency Locking Retractor normally functions as an Emergency Locking Retractor (ELR). The A/ELR has an additional locking mode "Automatic Locking Retractor (ALR) mode" intended to secure a child restraint system. When the seatbelt is once drawn out completely and is then retracted even slightly, the retractor locks the seatbelt in that position and the seatbelt cannot be extended. As the belt is rewinding, clicks will be heard which indicate the retractor functions as an ALR. When the seatbelt is retracted fully, the ALR mode is released.

When securing a child restraint system on the rear seats by the use of the seatbelt, the seatbelt must be changed over to the Automatic Locking Retractor (ALR) mode.

When the child restraint system is removed, make sure that the seatbelt retracts fully and the retractor returned to the Emergency Locking Retractor (ELR) mode.
For instructions on how to convert the retractor to the ALR mode and restore it to the ELR mode, see the "Child restraint

– CONTINUED –

systems” section in this chapter.

■ Seatbelt warning light and chime

Your vehicle is equipped with a seatbelt warning device at the driver’s seat, as required by current safety standards. There is a seatbelt warning light in the combination meter.

If the driver has not yet fastened the seatbelt when the ignition switch is turned to the “ON” position, the seatbelt warning light will flash for 6 seconds, to warn that the seatbelt is unfastened. If the driver’s seatbelt is not fastened, a chime will also sound simultaneously.

If the driver’s seatbelt is still not fastened 6 seconds later, the warning light will remain lit for 15 seconds. If the driver’s seatbelt is still not fastened even 15 seconds later (21 seconds after turning ON the ignition switch), the warning lights will alternate between flashing and steady illumination at 15-second intervals, and the chime will sound while the warning light is flashing.

Alternate flashing and steady illumination of the warning lights and sounding of the chime will continue until the driver fastens the seatbelt.

NOTE

- **If the driver unfastens the seatbelt after fastening, the seatbelt warning device operates as follows according to the vehicle speed.**
  - **At speeds lower than approximately 9 mph (15 km/h)**
    The warning light will alternate between flashing and steady illumination at 15-second intervals. The chime will not sound.
  - **At speeds higher than approximately 9 mph (15 km/h)**
    The warning light will alternate between flashing and steady illumination at 15-second intervals and the chime will sound while the warning light is flashing.
- **It is possible to cancel the warning operation that follows the 6-second warning after turning ON the ignition switch by unfastening and refastening the driver’s seatbelt. When the ignition switch is turned ON next time, however, the complete sequence of warning operation resumes. For further details about canceling the warning operation, please contact your SUBARU dealer.**

■ Fastening the seatbelt

⚠ WARNING

- **Never use a belt that is twisted or reversed. In an accident, this can increase the risk or severity of injury.**
- **Keep the lap belt as low as possible on your hips. In a collision, this spreads the force of the lap belt over stronger hip bones instead of across the weaker abdomen.**
- **Seatbelts provide maximum restraint when the occupant sits well back and upright in the seat. To reduce the risk of sliding under the seatbelt in a collision, the front seatbacks should be always used in the upright position while the vehicle is running. If the front seatbacks are not used in the upright position in a collision, the risk of sliding under the lap belt and of the lap belt sliding up over the abdomen will increase, and both can result in serious internal injury or death.**

- **Do not put cushions or any other materials between occupants and seatbacks or seat cushions. If you do so, the risk of sliding under the lap belt and of the lap belt sliding up over the abdomen will increase, and both can result in serious internal injury or death.**

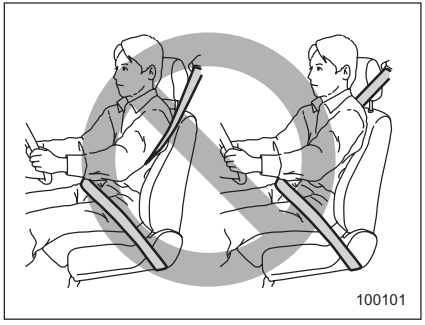

⚠ WARNING

Never place the shoulder belt under the arm or behind the back. If an accident occurs, this can increase the risk or severity of injury.

⚠ CAUTION

Metallic parts of the seatbelt can become very hot in a vehicle that has been closed up in sunny weather; they could burn an occupant. Do not touch such hot parts until they cool.

▼ Front seatbelts

1. Adjust the seat position:

Driver's seat: Adjust the seatback to the upright position. Move the seatback as far from the steering wheel as practical while still maintaining full vehicle control.

Front passenger's seat: Adjust the seatback to the upright position. Move the seat as far back as possible.

2. Sit well back in the seat.
3. Pick up the tongue plate and pull the belt out slowly. Do not let it get twisted. If the belt stops before reaching the buckle, return the belt slightly and pull it out more slowly. If the belt still cannot be unlocked, let the belt retract slightly after giving it a strong pull, then pull it out slowly again.

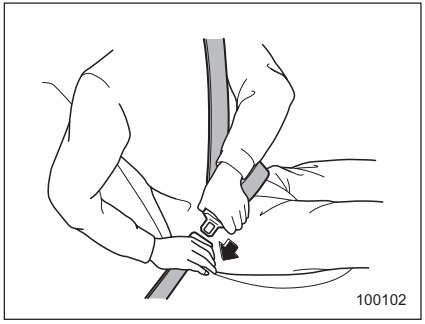

4. Insert the tongue plate into the buckle until you hear a click.

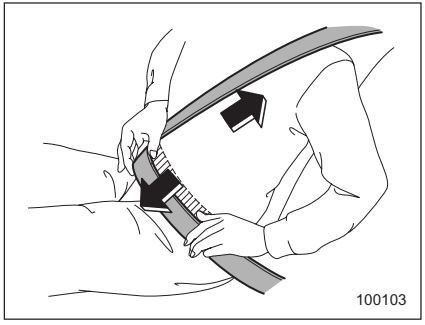

5. To make the lap part tight, pull up on the shoulder belt.
6. Place the lap belt as low as possible on your hips, not on your waist.

– CONTINUED –

▽ Adjusting the front seat shoulder belt anchor height

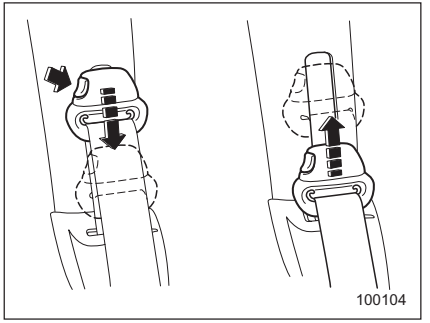

The shoulder belt anchor height should be adjusted to the position best suited for the driver/front passenger.
To lower the anchor height, push the release button and slide the anchor down.
To raise the anchor height, slide the anchor up. Pull down on the anchor to make sure that it is locked in place.
Always adjust the anchor height so that the shoulder belt passes over the middle of the shoulder without touching the neck.

⚠ WARNING

When wearing the seatbelts, make sure the shoulder portion of the webbing does not pass over your neck. If it does, adjust the seatbelt anchor to a lower position. Placing the shoulder belt over the neck may result in neck injury during sudden braking or in a collision.

▽ Unfastening the seatbelt

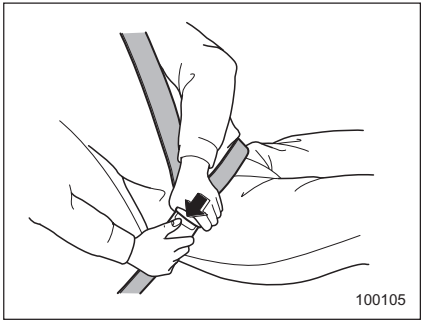

Push the button on the buckle.
Before closing the door, make sure that the belts are retracted properly to avoid catching the belt webbing in the door.

▼ Rear seatbelts (except rear center seatbelt)

1. Sit well back in the seat.
2. Pick up the tongue plate and pull the belt out slowly. Do not let it get twisted. If the belt stops before reaching the buckle, return the belt slightly and pull it out more slowly. If the belt still cannot be unlocked, let the belt retract slightly after giving a strong pull on it, then pull it out slowly again.

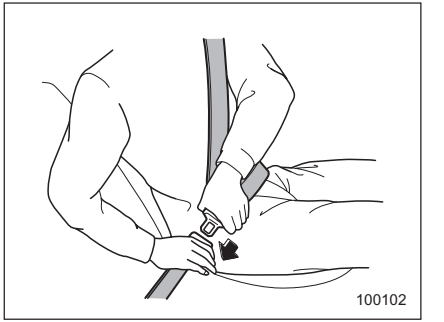

3. Insert the tongue plate into the buckle until you hear a click.

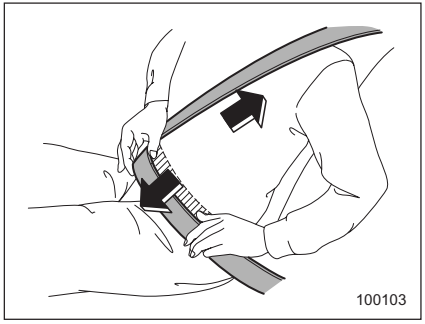

4. To make the lap part tight, pull up on the shoulder belt.
5. Place the lap belt as low as possible on your hips, not on your waist.

▽ Adjusting the rear seat shoulder belt anchor height (window-side seating positions only)

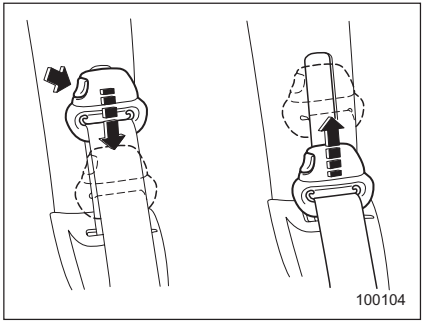

The shoulder belt anchor height should be adjusted to the position best suited for you.
To lower the anchor height, push the release button and slide the anchor down.
To raise the anchor height, slide the anchor up. Pull down on the anchor to make sure that it is locked in place.
Always adjust the anchor height so that the shoulder belt passes over the middle of the shoulder without touching the neck.

⚠ WARNING

When wearing the seatbelts, make sure the shoulder portion of the webbing does not pass over your neck. If it does, adjust the seatbelt anchor to a lower position. Placing the shoulder belt over the neck may result in neck injury during sudden braking or in a collision.

▽ Unfastening the seatbelt

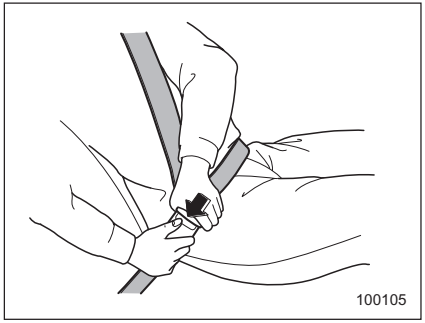

Push the button on the buckle.
Before closing the door, make sure that the belts are retracted properly to avoid catching the belt webbing in the door.

– CONTINUED –

▼ Rear center seatbelt

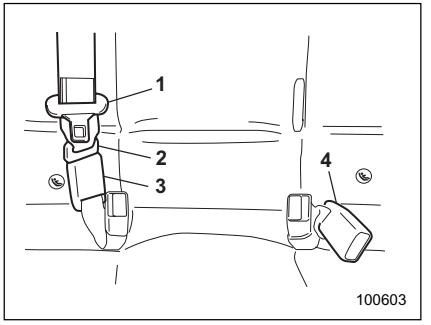

1) Center seatbelt tongue plate
2) Connector (tongue)
3) Connector (buckle)
4) Center seatbelt buckle

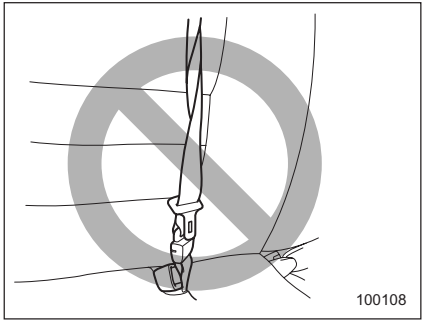

⚠ WARNING

Fastening the seatbelt with the webbing twisted can increase the risk or severity of injury in an accident. When fastening the belt after it is pulled out from the retractor, especially when inserting the connector's tongue plate into the mating buckle (on right-hand side), always check that the webbing is not twisted.

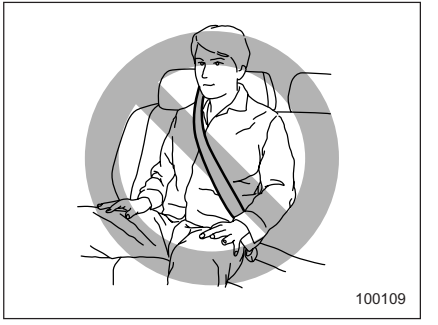

⚠ WARNING

Be sure to fasten both tongue plates to the respective buckles. If the seatbelt is used only as a shoulder belt (with the connector's tongue plate not fastened to the connector's buckle on the right-hand side), it cannot properly restrain the wearer in position in an accident, possibly resulting in serious injury or death.

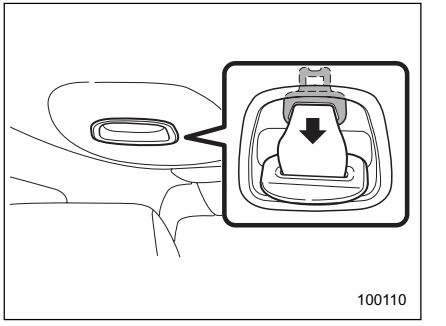

Rear center seatbelt is stowed in the recess of the ceiling.

1. Remove the connector (tongue) plate from the slot located at the front of the recess by pulling the connector (tongue)

plate rearward.

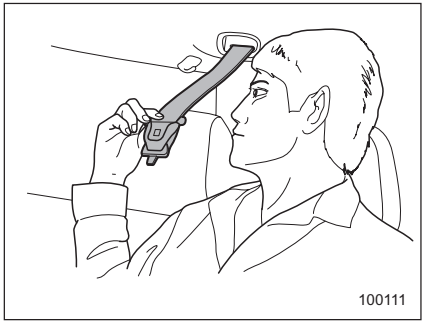

2. Pull out the seatbelt slowly from the overhead retractor.

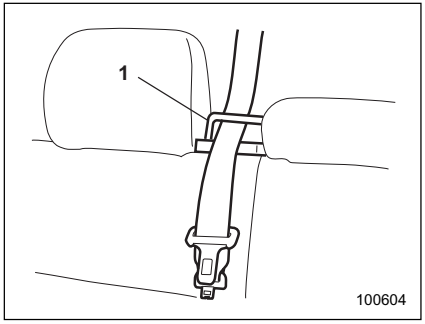

1) Seatbelt comfort guide

3. Pass the seatbelt through the seatbelt comfort guide located beside the head restraint.

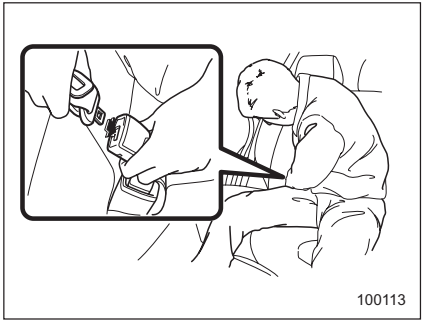

4. After confirming that the webbing is not twisted, insert the connector (tongue) attached at the webbing end into the buckle on the right-hand side until a click is heard. If the belt stops before reaching the buckle, return the belt slightly and pull it out more slowly. If the belt still cannot be unlocked, let the belt retract slightly after giving it a strong pull, then pull it out slowly again.

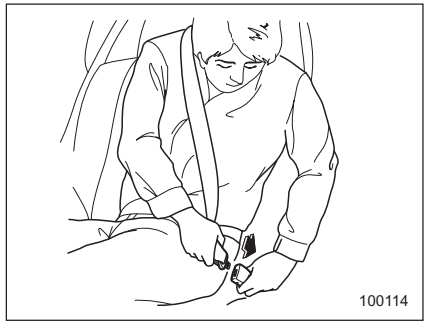

5. Insert the center seatbelt tongue plate in the center seatbelt buckle marked “CENTER” on the left-hand side until it clicks.

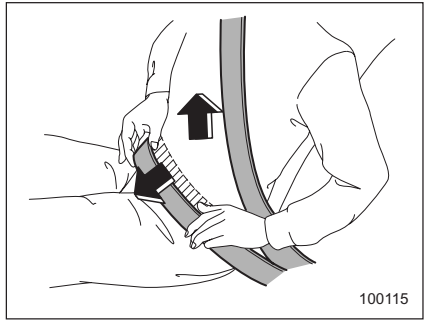

6. To make the lap part tight, pull up on the shoulder belt.

– CONTINUED –

7. Place the lap belt as low as possible on your hips, not on your waist.

▽ **Unfastening the seatbelt**

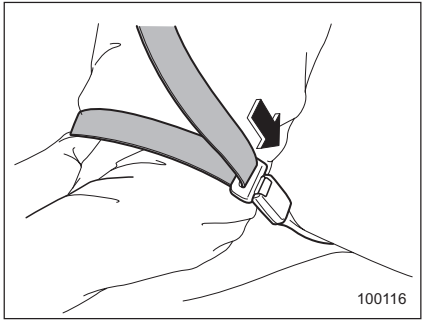

Push the release button of the center seatbelt buckle (on the left-hand side) to unfasten the seatbelt.

NOTE

When the seatback is folded down for greater cargo area, it is necessary to disconnect the connector.

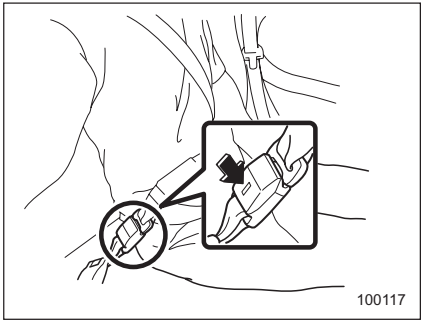

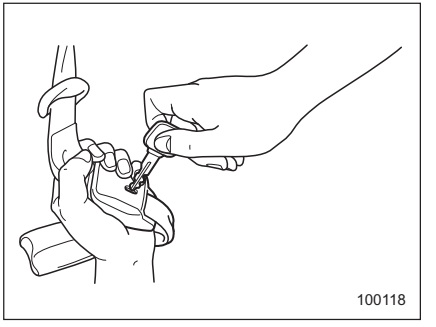

1. Insert a key or other hard pointed object into the slot in the connector (buckle) on the right-hand side and push it in, and the connector (tongue) plate will disconnect from the buckle.

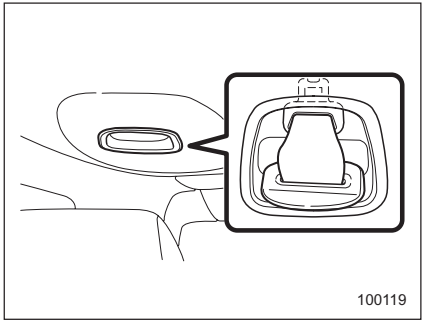

2. Allow the retractor to roll up the belt. You should hold the webbing end and guide it back into the retractor while it is rolling up. Neatly store the tongue plates in the recess on the ceiling and then insert the connector (tongue) plate into the slot located at the front of the recess.

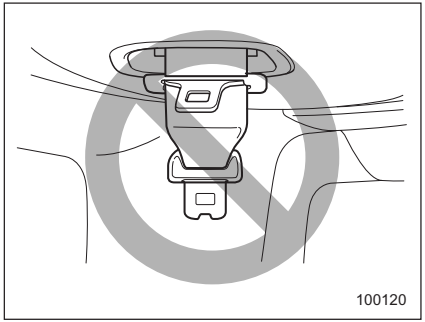

CAUTION

- **Do not allow the retractor to roll up the seatbelt too quickly. Otherwise, the metal tongue plates may hit against the trim, resulting in damaged trim.**
- **Have the seatbelt fully rolled up so that the tongue plates are neatly stored. A hanging tongue plate can swing and hit against the trim during driving, causing damage to the trim.**

■ Seatbelt maintenance

To clean the seatbelts, use a mild soap and lukewarm water. Never bleach or dye the belts because this could seriously affect their strength.

Inspect the seatbelts and attachments including the webbing and all hardware periodically for cracks, cuts, gashes, tears, damage, loose bolts or worn areas. Replace the seatbelts even if only minor damage is found.

CAUTION

- **Keep the belts free of polishes, oils, chemicals and particularly battery acid.**
- **Never attempt to make modifications or changes that will prevent the seatbelt from operating properly.**

Seatbelt extender

If the front seatbelts are not long enough to permit the tongue plate to engage with the seatbelt buckle, an optional seatbelt extender is available from your SUBARU dealer. When ordering an extender, only order one particularly designed for your vehicle. Several different types of extenders are available to match various varieties of front seatbelt designs. See your SUBARU dealer for assistance.

The extender adds approximately 8 inches (200 mm) of length and it can be used for either the driver or front passenger seating position.

For the safety of others, the extender should be removed after each use, especially if the next person using the seatbelt does not need one.
Note that leaving the seatbelt extender's tongue plate engaged with the seatbelt buckle may prevent the Subaru advanced front airbag system from functioning correctly or cause the system to fail.

WARNING

Be sure to observe the following when using the seatbelt extender.

– CONTINUED –

Failure to follow these instructions and warnings could reduce the effectiveness of the seatbelt and result in more serious injury in the event of a collision.

- **Never use the extender when the belt itself is long enough to permit it to be buckled properly. If removal of heavy clothing is all that is needed to permit the seatbelt to be buckled properly, remove the heavy clothing and do not use the extender.**
- **Do not use the extender if the buckle of the extender rests over the abdomen.**
- **Do not let someone else use the extender. Use of an extender when it is not needed could reduce the effectiveness of the seatbelt and result in more serious injury in the event of a collision.**
- **Use the extender only for the front seatbelts and only for the model for which it was originally provided. Never use the extender for the rear seatbelts or for a different model.**

NOTE

When the seatbelt extender is used by a pregnant passenger, consult a doctor to get approval in advance.

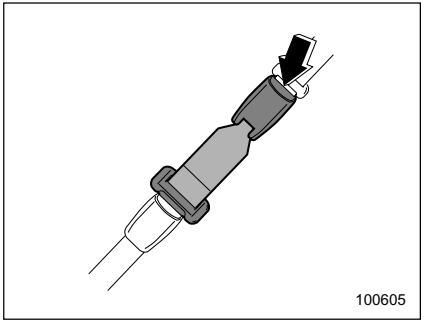

To connect the extender to the seatbelt, insert the tongue plate into the seatbelt buckle so that the “PRESS” signs on the buckle-release buttons of the extender and the seatbelt are both facing outward as shown in the diagram. You will hear a click when the tongue plate locks into the buckle.

When releasing the seatbelt, press on the buckle-release button on the extender, not on the seatbelt. This helps to prevent damage to the vehicle interior and extender itself.

Front seatbelt pretensioners

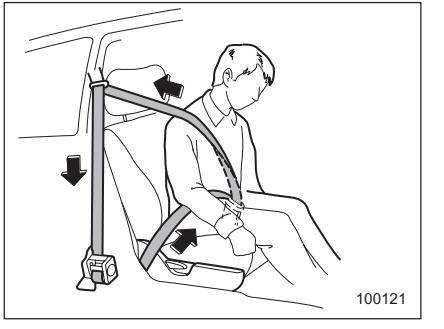

The driver’s and front passenger’s seatbelts have a seatbelt pretensioner. The seatbelt pretensioners are designed to be activated in the event of an accident involving a moderate to severe frontal collision.
Also, the seatbelt pretensioners are designed to be activated in the event of an accident involving a moderate to severe side impact collision.

The pretensioner sensor also serves as the frontal and side SRS airbag sensors. If the sensors detect a certain predetermined amount of force during a frontal collision or a side impact collision, the front seatbelt is quickly drawn back in by the re-

tractor to take up the slack so that the belt more effectively restrains the front seat occupant.
When a seatbelt pretensioner is activated, an operating noise will be heard and a small amount of smoke will be released. These occurrences are normal and not harmful. This smoke does not indicate a fire in the vehicle.

Once the seatbelt pretensioner has been activated, the seatbelt retractor remains locked. Consequently, the seatbelt can not be pulled out and retracted and therefore must be replaced.

NOTE

• Seatbelt pretensioners are not designed to activate in minor frontal impacts, in minor side impacts or in rear impacts or in roll-over accidents.
• The driver's seat and passenger's seat pretensioners and frontal SRS airbag operate simultaneously.
• The driver's and passenger's seatbelt pretensioners and the SRS side airbag operate simultaneously.
• Pretensioners are designed to function on a one-time-only basis. In the event that a pretensioner is activated, both the driver's and front passenger's seatbelt retractor assemblies must be replaced only by an authorized SUBARU dealer. When replacing seatbelt retractor assemblies, use only genuine SUBARU parts.
• If either front seatbelt does not retract or cannot be pulled out due to a malfunction or activation of the pretensioner, contact your SUBARU dealer as soon as possible.
• If the front seatbelt retractor assembly or surrounding area has been damaged, contact your SUBARU dealer as soon as possible.
• When you sell your vehicle, we urge you to explain to the buyer that it has seatbelt pretensioners by alerting him to the contents of this section.

⚠ WARNING

- **To obtain maximum protection, the occupants should sit in an upright position with their seatbelts properly fastened. Refer to the "Seatbelts" section in this chapter.**
- **Do not modify, remove or strike the front seatbelt retractor assemblies or surrounding area. This could result in accidental activation of the seatbelt pretensioners or could make the system inoperative, possibly resulting in serious injury. Seatbelt pretensioners have no user-serviceable parts. For required servicing of front seatbelt retractors equipped with seatbelt pretensioners, see your nearest SUBARU dealer.**
- **When discarding front seatbelt retractor assemblies or scrapping the entire vehicle due to collision damage or for other reasons, consult your SUBARU dealer.**

– CONTINUED –

■ System monitors

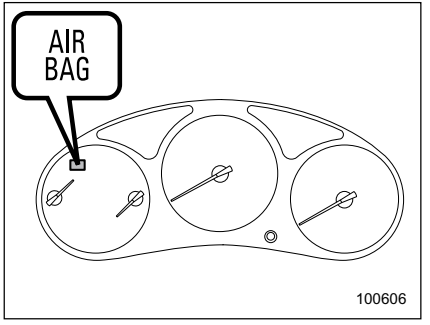

A diagnostic system continually monitors the readiness of the seatbelt pretensioner while the vehicle is being driven. The seatbelt pretensioners share the control module with the SRS airbag system. Therefore, if any malfunction occurs in a seatbelt pretensioner, the SRS airbag system warning light will illuminate. The SRS airbag system warning light will show normal system operation by lighting for approximately 6 seconds when the ignition switch is turned to the “ON” position.

The following components are monitored by the indicator:

- Front sub sensor (Right-hand side)
- Front sub sensor (Left-hand side)
- Airbag control module (including impact sensors)
- Frontal airbag module (Driver’s side)
- Frontal airbag module (Front passenger’s side)
- Side airbag sensor (Center pillar right-hand side)
- Side airbag sensor (Center pillar left-hand side)
- Side airbag module (Driver’s side)
- Side airbag module (Front passenger’s side)
- Seatbelt pretensioner (Driver’s side)
- Seatbelt pretensioner (Front passenger’s side)
- Seatbelt buckle switch (Driver’s side)
- Seatbelt buckle switch (Front passenger’s side)
- Driver’s seat position sensor
- Front passenger’s seatbelt tension sensor (if equipped)
- Front passenger’s occupant detection system weight sensor
- Front passenger’s occupant detection control module
- Front passenger’s frontal airbag ON and OFF indicator
- All related wiring

⚠ WARNING

If the warning light exhibits any of the following conditions, there may be a malfunction in the seatbelt pretensioners and/or SRS airbag system. Immediately take your vehicle to your nearest SUBARU dealer to have the system checked. Unless checked and properly repaired, the seatbelt pretensioners and/or SRS airbags will not operate properly in the event of a collision, which may increase the risk of injury.

- **Flashing or flickering of the warning light**
- **No illumination of the warning light when the ignition switch is first turned to the “ON” position**
- **Continuous illumination of the warning light**
- **Illumination of the warning light while driving**

■ System servicing

⚠ WARNING

- **When discarding a seatbelt retractor assembly or scrapping the entire vehicle damaged by a collision, consult your SUBARU dealer.**
- **Tampering with or disconnecting the system's wiring could result in accidental activation of the seatbelt pretensioner and/or SRS airbag or could make the system inoperative, which may result in serious injury. The wiring harnesses of the seatbelt pretensioner and SRS airbag systems are covered with yellow insulation and the connectors of the system are yellow for easy identification. Do not use electrical test equipment on any circuit related to the seatbelt pretensioner and SRS airbag systems. For required servicing of the seatbelt pretensioner, see your nearest SUBARU dealer.**

⚠ CAUTION

The front sub sensors are located near the bottom of the radiator and the side airbag sensor is located inside each center pillar and the SRS airbag control module including the impact sensors is located under the center console. If you need service or repair in those areas or near the front seatbelt retractors, we recommend that you have an authorized SUBARU dealer perform the work.

NOTE

If the front part of the vehicle is damaged in an accident to the extent that the seatbelt pretensioner does not operate, contact your SUBARU dealer as soon as possible.

■ Precautions against vehicle modification

Always consult your SUBARU dealer if you want to install any accessory parts to your vehicle.

⚠ CAUTION

Do not perform any of the following modifications. Such modifications can interfere with proper operation of the seatbelt pretensioners.

- **Attachment of any equipment (bush bar, winches, snow plow, skid plate, etc.) other than genuine SUBARU accessory parts to the front end.**
- **Modification of the suspension system or front end structure.**
- **Installation of a tire of different size and construction from the tires specified on the vehicle placard attached to the driver's door pillar or specified for individual vehicle models in this Owner's Manual.**

Child restraint systems

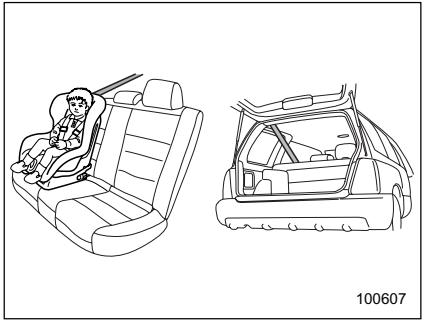

Infants and small children should always be placed in an infant or child restraint system in the rear seat while riding in the vehicle. You should use an infant or child restraint system that meets Federal Motor Vehicle Safety Standards or Canada Motor Vehicle Safety Standards, is compatible with your vehicle and is appropriate for the child's age and size. All child restraint systems are designed to be secured in vehicle seats by lap belts or the lap belt portion of a lap/shoulder belt (except those covered under the section in this manual, entitled "Installation of child restraint systems by use of lower and tether anchorages (LATCH)").

Children could be endangered in an accident if their child restraints are not properly secured in the vehicle. When installing the child restraint system, carefully follow the manufacturer's instructions.

According to accident statistics, children are safer when properly restrained in the rear seating positions than in the front seating positions.

All U.S. states and Canadian provinces require that infants and small children be restrained in an approved child restraint system at all times while the vehicle is moving.

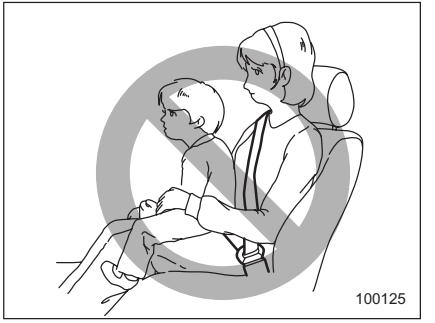

⚠ WARNING

Never let a passenger hold a child on his or her lap or in his or her arms while the vehicle is moving. The passenger cannot protect the child from injury in a collision, because the child will be caught between the passenger and objects inside the vehicle.

Additionally, holding a child in your lap or arms in the front seat exposes that child to another serious danger. Since the SRS airbag deploys with considerable speed and force, the child could be injured or even killed.

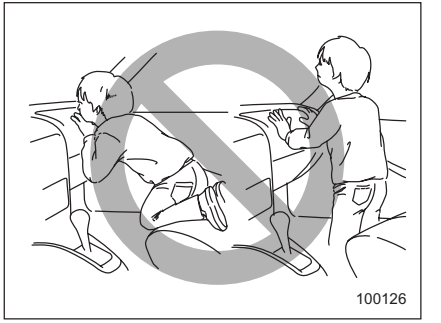

⚠ WARNING

Children should be properly restrained at all times. Never allow a child to stand up, or to kneel on any seat. Unrestrained children will be thrown forward during sudden stop or in an accident and can be injured seriously.

Additionally, children standing up or kneeling on or in front of the front seat are exposed another serious danger. Since the SRS airbag deploys with considerable speed and force, the child could be injured or even killed.

■ Where to place a child restraint system

The following are SUBARU's recommendations on where to place a child restraint system in your vehicle.

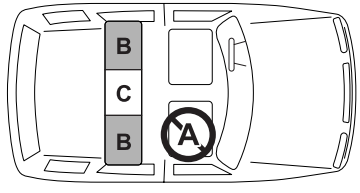

100127

A: Front passenger's seat
You should not install a child restraint system (including a booster seat) due to the hazard to children posed by the passenger's airbag.

B: Rear seat, window-side seating positions
Recommended positions for all types of child restraint systems.
In these positions, Automatic/Emergency Locking Retractor (A/ELR) seatbelts and lower anchorages (bars) are provided for installing a child restraint system.
Some types of child restraints might not be able to be secured firmly due to projection of the seat cushion.
In this seating position, you should use only a child restraint system that has a bottom base that fits snugly against the contours of the seat cushion and can be securely retained using the seatbelt.

C: Rear seat, center seating position
Installing a child restraint system is not recommended, although the A/ELR seatbelt and an upper anchorage (tether anchorage) are provided in this position.
Some types of child restraints might not be able to be secured firmly due to projection of the seat cushion.
In this seating position, you should use only a child restraint system that has a bottom base that fits snugly against the contours of the seat cushion and can be securely retained using the seatbelt.

⚠ WARNING

Put children aged 12 and under in the rear seat properly restrained at all times. The SRS airbag deploys with considerable speed and force and can injure or even kill children, especially if they are 12 years of age and under and are not restrained or improperly restrained. Because children are lighter and weaker than adults, their risk of being injured from deployment is greater.

– CONTINUED –

Consequently, be sure to secure ALL types of child restraint devices (including forward facing child seats) in the REAR seats at all times. You should choose a restraint device which is appropriate for the child's age, height and weight. According to accident statistics, children are safer when properly restrained in the rear seating positions than in the front seating positions.

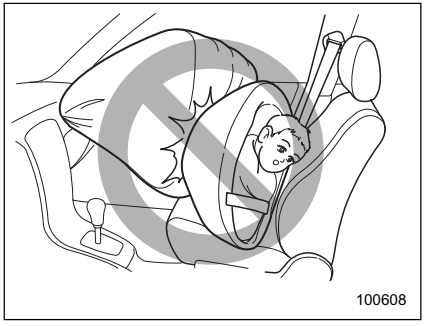

⚠ WARNING

SINCE YOUR VEHICLE IS EQUIPPED WITH A PASSENGER'S SRS AIRBAG, NEVER INSTALL A REARWARD FACING CHILD SAFETY SEAT IN THE FRONT PASSENGER'S SEAT. DOING SO RISKS SERIOUS INJURY OR DEATH TO THE CHILD BY PLACING THE CHILD'S HEAD TOO CLOSE TO THE SRS AIRBAG.

■ Choosing a child restraint system

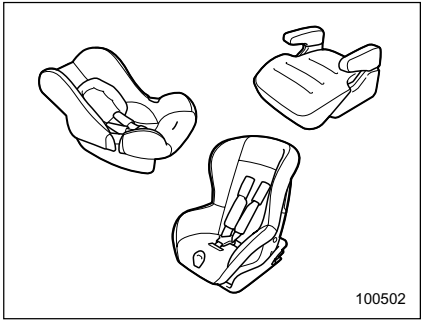

Choose a child restraint system that is appropriate for the child's age and size (weight and height) in order to provide the child with proper protection. The child restraint system should meet all applicable requirements of Federal Motor Vehicle Safety Standards for United States or Canada Motor Vehicle Safety Standards for Canada. It can be identified by looking for the label on the child restraint system or the manufacture's statement of compliance in the document attached to the system. Also it is important for you to make sure that the child restraint system is compatible with the vehicle in which it will be used.

■ Installing child restraint systems with A/ELR seatbelt

⚠ WARNING

- **Child restraint systems and seatbelts can become hot in a vehicle that has been closed up in sunny weather; they could burn a small child. Check the child restraint system before you place a child in it.**
- **Do not leave an unsecured child restraint system in your vehicle. Unsecured child restraint systems can be thrown around inside of the vehicle in a sudden stop, turn or accident; they can strike and injure vehicle occupants as well as result in serious injuries or death to the child.**

⚠ CAUTION

When you install a child restraint system, follow the manufacturer's instructions supplied with it. After installing the child restraint system, check to ensure that it is held securely in position. If it is not held tight and secure, the danger of your child suffering personal injury in the event of an accident may be increased.

▼ Installing a rearward facing child restraint

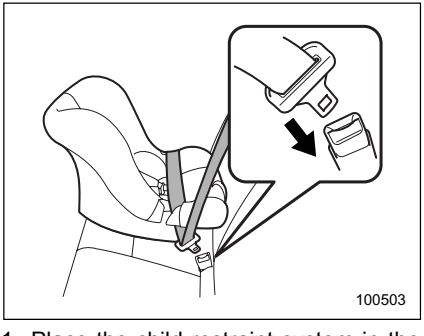

1. Place the child restraint system in the rear seating position.
2. Run the lap and shoulder belt through or around the child restraint system following the instructions provided by its manufacturer.
3. Insert the tongue plate into the buckle until you hear a click.

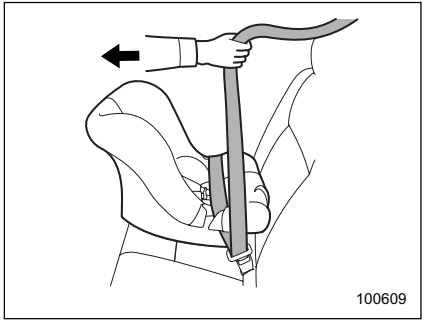

4. Take up the slack in the lap belt.
5. Pull out the seatbelt fully from the retractor to change the retractor over from the Emergency Locking Retractor (ELR) to the Automatic Locking Retractor (ALR) function. Then, allow the belt to rewind into the retractor. As the belt is rewinding, clicks will be heard which indicate the retractor functions as ALR.

– CONTINUED –

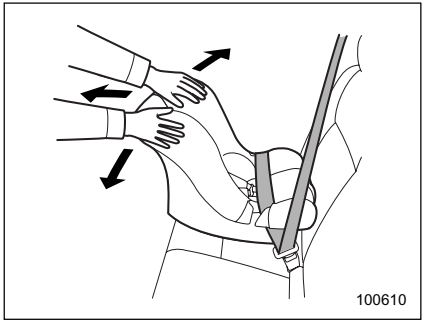

6. Push and pull the child restraint system forward and from side to side to check if it is firmly secured.
Sometime a child restraint can be more firmly secured by pushing it down into the seat cushion and then tightening the seatbelt.
7. Pull at the shoulder portion of the belt to confirm that it cannot be pulled out (ALR properly functioning).

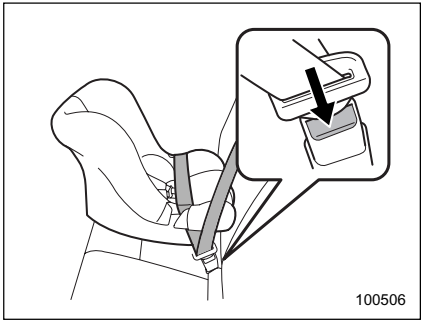

8. To remove the child restraint system, press the release button on the seatbelt buckle and allow the belt to retract completely. The belt will return to the ELR mode.

⚠ WARNING

NEVER INSTALL A REARWARD FACING CHILD SEAT IN THE FRONT PASSENGER'S SEAT. DOING SO RISKS SERIOUS INJURY OR DEATH TO THE CHILD BY PLACING THE CHILD'S HEAD TOO CLOSE TO THE SRS AIRBAG.

NOTE

When the child restraint system is no longer in use, remove it and restore the ELR function of the retractor. That function is restored by allowing the seatbelt to retract fully.

▼ Installing forward facing child restraint

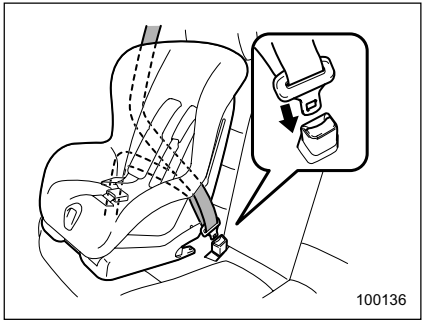

1. Place the child restraint system in the rear seating position.
2. Run the lap and shoulder belt through or around the child restraint system following the instructions provided by its manufacturer.
3. Insert the tongue plate into the buckle until you hear a click.

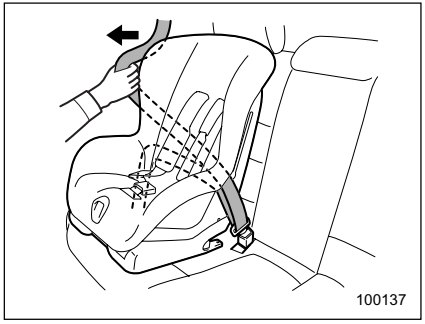

4. Take up the slack in the lap belt.
5. Pull out the seatbelt fully from the retractor to change the retractor over from the Emergency Locking Retractor (ELR) to the Automatic Locking Retractor (ALR) function. Then, allow the belt to rewind into the retractor. As the belt is rewinding, clicks will be heard which indicate the retractor functions as ALR.

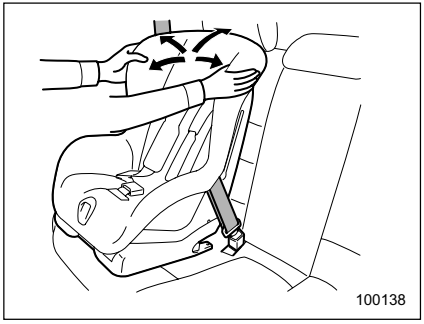

6. Before having a child sit in the child restraint system, move it back and forth and right and left to check if it is firmly secured. Sometimes a child restraint can be more firmly secured by pushing it down into the seat cushion and then tightening the seatbelt.
7. Pull at the shoulder portion of the belt to confirm that it cannot be pulled out (ALR properly functioning).

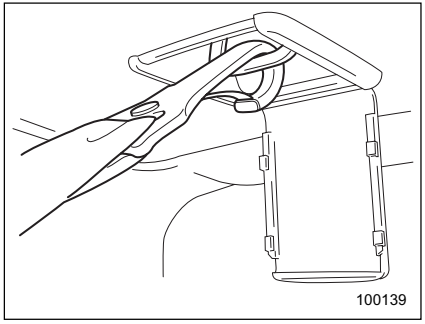

8. If the child restraint system requires a top tether, latch the hook onto the top tether anchor and tighten the top tether. See the “Top tether anchorages” for additional instructions.

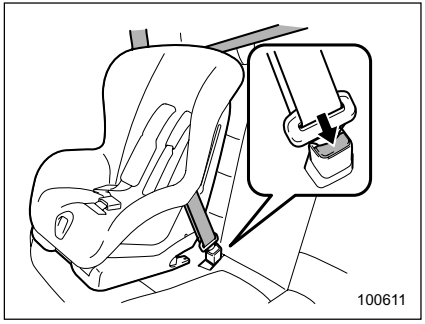

9. To remove the child restraint system,

– CONTINUED –

press the release button on the seatbelt buckle and allow the belt to retract completely. The belt will return to the ELR mode. Unhook the top tether hook from the top tether anchor.

NOTE

When the child restraint system is no longer in use, remove it and restore the ELR function of the retractor. That function is restored by allowing the seatbelt to retract fully.

■ Installing a booster seat

⚠ WARNING

- **Child restraint systems and seatbelts can become hot in a vehicle that has been closed up in sunny weather; they could burn a small child. Check the child restraint system before you place a child in it.**
- **Do not leave an unsecured child restraint system in your vehicle. Unsecured child restraint systems can be thrown around inside of the vehicle in a sudden stop, turn or accident; they can strike and injure vehicle occupants as well as result in serious injuries or death to the child.**

⚠ CAUTION

When you install a child restraint system, follow the manufacturer's instructions supplied with it. After installing the child restraint system, check to ensure that it is held securely in position. If it is not held tight and secure, the danger of your child suffering personal injury in the event of an accident may be increased.

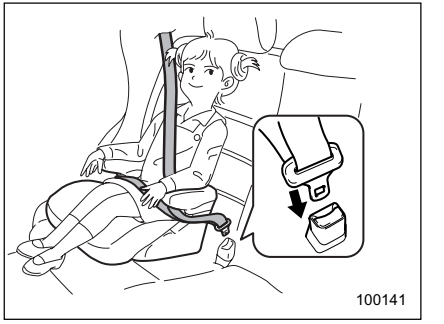

1. Place the booster seat in the rear seating position and sit the child on it. The child should sit well back on the booster seat.
2. Run the lap and shoulder belt through or around the booster seat and the child following the instructions provided by its manufacturer.
3. Insert the tongue plate into the buckle until you hear a click. Take care not to twist the seatbelt.

Make sure the shoulder belt is positioned across the center of child's shoulder and that the lap belt is positioned as low as possible on the child's hips.

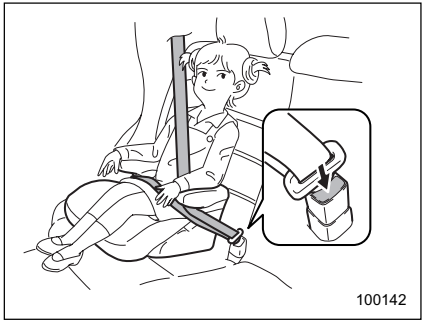

4. To remove the booster seat, press the release button on the seatbelt buckle and allow the belt to retract.

WARNING

- **Never use a belt that is twisted or reversed. In an accident, this can increase the risk or severity of injury to the child.**
- **Never place the shoulder belt under the child's arm or behind the child's back. If an accident occurs, this can increase the risk or severity of injury to the child.**
- **The seatbelt should fit snugly in order to provide full restraint. Loose fitting belts are not as effective in preventing or reducing injury.**
- **Place the lap belt as low as possible on the child's hips. A high-positioned lap belt will increase the risk of sliding under the lap belt and of the lap belt sliding up over the abdomen, and both can result in serious internal injury or death.**
- **Make sure the shoulder belt is positioned across the center of child's shoulder. Placing the shoulder belt over the neck may result in neck injury during sudden braking or in a collision.**

■ Installation of child restraint systems by use of lower and tether anchorages (LATCH)

WARNING

- **Child restraint systems and seatbelts can become hot in a vehicle that has been closed up in sunny weather; they could burn a small child. Check the child restraint system before you place a child in it.**
- **Do not leave an unsecured child restraint system in your vehicle. Unsecured child restraint systems can be thrown around inside of the vehicle in a sudden stop, turn or accident; they can strike and injure vehicle occupants as well as result in serious injuries or death to the child.**

– CONTINUED –

⚠ CAUTION

When you install a child restraint system, follow the manufacturer's instructions supplied with it. After installing the child restraint system, check to ensure that it is held securely in position. If it is not held tight and secure, the danger of your child suffering personal injury in the event of an accident may be increased.

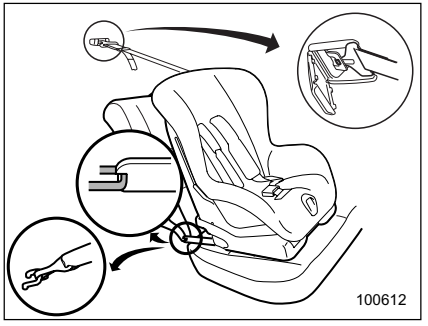

Some types of child restraint systems can be installed on the rear seat of your vehicle without use of the seatbelts. Such child restraint systems are secured to the designated anchorages provided on the vehicle body.

The lower and tether anchorages are sometimes referred to as the LATCH system (**L**ower **A**nchors and **T**ethers for **CH**ildren).

Your vehicle is equipped with four lower anchorages (bars) and three upper anchorages (tether anchorages) for accommodating such child restraint systems.

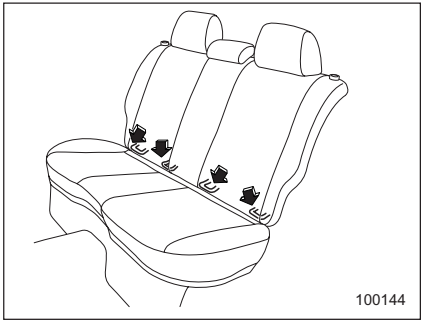

The lower anchorages (bars) are used for installing a child restraint system only on the rear seat window-side seating positions. For each window-side seating position, two lower anchorages are provided. Each anchor bar is located where the seat cushion meets the seatback.

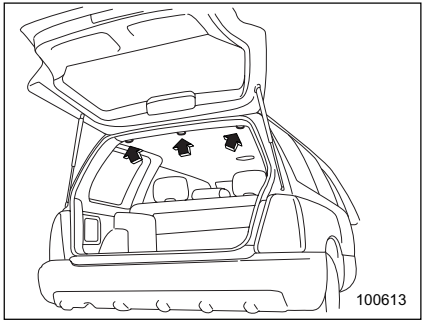

The tether anchorages (upper anchorages) are provided for all the seating positions (middle and both window-side ones) of the rear seat.

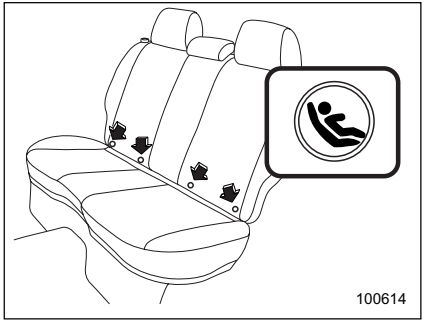

You will find marks " " at the bottom of the rear seat seatbacks. These marks in-

dicate the positions of the lower anchorages (bars).

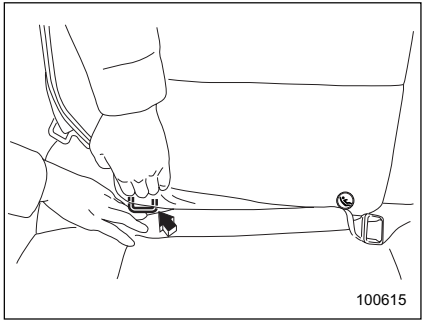

Each lower anchorage is located where the seat cushion meets the seatback.

1. Use the “ ” marks to locate the two lower anchorages (bars) for the position where you want to install the child restraint system.

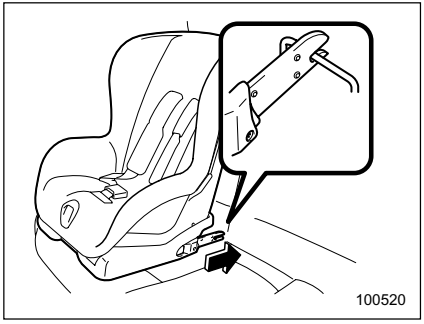

2. While following the instructions supplied by the child restraint system manufacturer, connect the lower hooks onto the lower anchorages located at “ ” marks on the bottom of the rear seatback. When the hooks are connected, make sure the adjacent seatbelts are not caught.

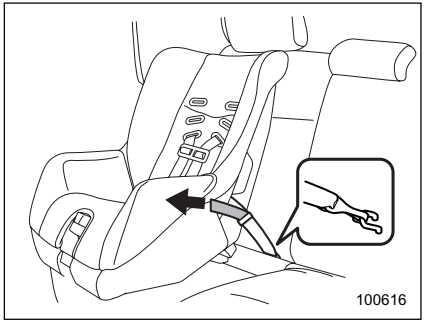

3. [If your child restraint system is of a flexible attachment type (which uses tether belts to connect the child restraint system properly to the lower anchorages)]
While pushing the child restraint into the seat cushion, pull both left and right lower tether belts up to secure the child restraint system firmly by taking up the slack in the belt.
4. Connect the top tether hook to the tether anchorage and firmly tighten the tether. For information on how to set the top tether, read the following “Top tether anchorages”.

– CONTINUED –

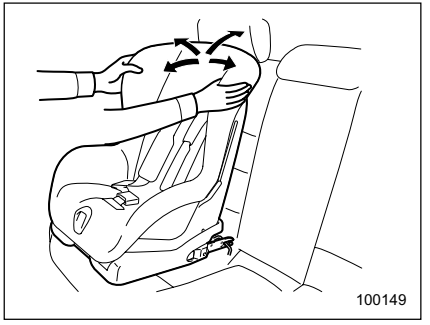

5. Before seating a child in the child restraint system, try to move seat back and forth and left and right to verify that it is held securely in position.
6. To remove the child restraint system, follow the reverse procedures of installation.

If you have any question concerning this type of child restraint system, ask your SUBARU dealer.

■ Top tether anchorages

Your vehicle is equipped with three top tether anchorages so that a child restraint system having a top tether can be installed in the rear seat. When installing a child restraint system using top tether, proceed as follows, while observing the instructions by the child restraint system manufacturer.

Since a top tether can provide additional stability by offering another connection between a child restraint system and the vehicle, we recommend that you use a top tether whenever one is required or available.

▼ Anchorage location

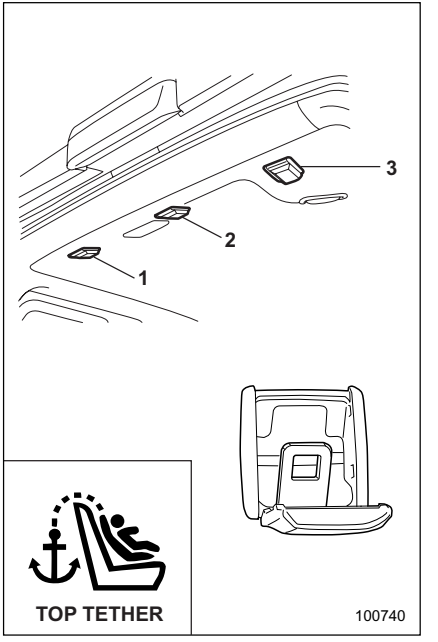

1) For left seat
2) For center seat
3) For right seat

Three upper anchorages are installed on the rear edge of the roof.

Open the cover flaps to use the tether anchorages.

▼ **To hook the top tether**

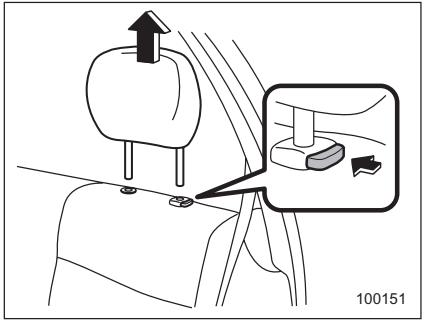

1. Remove the head restraint at the seating position where the child restraint system has been installed with the lower anchorages or seatbelt; lift up the head restraint while pressing the release button. Store the head restraint in the cargo area. Avoid placing the head restraint in the passenger compartment to prevent it from being thrown around in the passenger compartment in a sudden stop or a sharp turn.

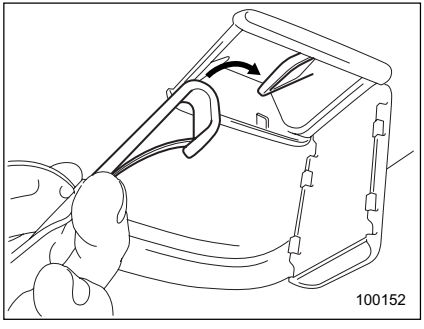

2. Open the cover flaps to use the anchorages. Fasten the top tether hook of the child restraint system to the appropriate top tether anchorage.

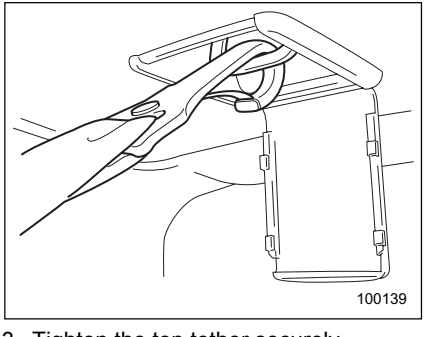

3. Tighten the top tether securely.

⚠ CAUTION

Always remove the head restraint when mounting a child restraint system with a top tether. Otherwise, it may not be possible to fasten the top tether tightly.

*SRS airbag (Supplemental Restraint System airbag)

*SRS: This stands for supplemental restraint system. This name is used because the airbag system supplements the vehicle's seatbelts.

Your vehicle is equipped with a crash sensing and diagnostic module, which will record the use of the seatbelt(s) by the driver and/or front passenger when any of the SRS frontal and side airbags deploys.

■ Vehicle with driver's and front passenger's SRS airbags and lap/shoulder restraints

Your vehicle is equipped with a supplemental restraint system in addition to a lap/shoulder belt at each front seating position.
The supplemental restraint system (SRS) consists of two airbag (driver's and front passenger's **frontal** airbags) or four airbags (driver's and front passenger's **frontal** airbags and driver's and front passenger's **side** airbags).
These SRS airbags are designed only as a supplement to the primary protection provided by the seatbelt.

The system also controls front seatbelt pretensioners. For operation instructions and precautions concerning the seatbelt pretensioner, see the "Front seatbelt pretensioners" section in this chapter.

⚠ WARNING

- **To obtain maximum protection in the event of an accident, the driver and all passengers in the vehicle should always wear seatbelts when the vehicle is moving. The SRS airbag is designed only as a supplement to the primary protection provided by the seatbelt. It does not do away with the need to fasten seatbelts. In combination with the seatbelts, it offers the best combined protection in case of a serious accident.**

  Not wearing a seatbelt increases the chance of severe injury or death in a crash even when the vehicle has the SRS airbag.

  For instructions and precautions concerning the seatbelt system, see the "Seatbelts" section in this chapter.

- **Do not sit or lean unnecessarily close to the SRS airbag. Because the SRS airbag deploys with considerable speed – faster than the blink of an eye – and force to protect in high speed collisions, the force of an airbag can injure an occupant whose body is too close to SRS airbag.**

  It is also important to wear your seatbelt to help avoid injuries that can result when the SRS airbag contacts an occupant not in proper position such as one thrown forward during pre-accident braking.

  Even when properly positioned, there remains a possibility that an occupant may suffer minor injury such as abrasions and bruises to the face or arms because of the SRS airbag deployment force.

- **The SRS airbags deploy with considerable speed and force. Occupants who are out of proper position when the SRS airbag deploys could suffer very serious injuries. Because the SRS airbag needs enough space for deployment, the driver should always sit upright and well back in the seat as far from the steering wheel as practical while still maintaining full vehicle control and the front passenger should move the seat as far back as possible and sit upright and well back in the seat.**
- **Do not place any objects over or near the SRS airbag cover or between you and the SRS airbag. If the SRS airbag deploys, those objects could interfere with its proper operation and could be propelled inside the vehicle and cause injury.**

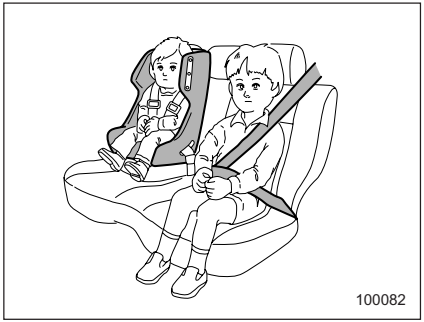

WARNING

- **Put children aged 12 and under in the rear seat properly restrained at all times. The SRS airbag deploys with considerable speed and force and can injure or even kill children, especially if they are 12 years of age and under and are not restrained or improperly restrained. Because children are lighter and weaker than adults, their risk of being injured from deployment is greater.**

  Consequently, we strongly recommend that ALL children (including those in child seats and those that have outgrown child restraint devices) sit in the REAR seat properly restrained at all times in a child restraint device or in a seatbelt, whichever is appropriate for the child's age, height and weight.

  Secure ALL types of child restraint devices (including forward facing child seats) in the REAR seats at all times.

  According to accident statistics, children are safer when properly restrained in the rear seating positions than in the front seating positions.

  For instructions and precautions concerning the child restraint system, see the "Child restraint systems" section in this chapter.
- **NEVER INSTALL A REARWARD FACING CHILD SEAT IN THE FRONT SEAT. DOING SO RISKS SERIOUS INJURY OR DEATH TO THE CHILD BY PLACING THE CHILD'S HEAD TOO CLOSE TO THE SRS AIRBAG.**

– CONTINUED –

- **Never allow a child to stand up, or to kneel on the front passenger's seat, or never hold a child on your lap or in your arms. The SRS airbag deploys with considerable force and can injure or even kill the child.**

⚠ CAUTION

- **When the SRS airbag deploys, some smoke will be released. This smoke could cause breathing problems for people with a history of asthma or other breathing trouble. If you or your passengers have breathing problems after SRS airbag deploys, get fresh air promptly.**
- **A deploying SRS airbag releases hot gas. Occupants could get burned if they come into direct contact with the hot gas.**

NOTE

When you sell your vehicle, we urge you to explain to the buyer that it is equipped with SRS airbags by alerting him or her to the applicable section in this owner's manual.

▼ **Components**

Any vehicle whose vehicle identification number's last six digits are "733000" or lower but are not "729759", "729760", "729761", "729762", "729763", "729764", "729765", "729899", "729900", "729901", "729902", "729903", "729904" or "729905"

For the location of the vehicle identification number plate, please refer to the "Vehicle identification" section on page 12-10 of this owner's manual.

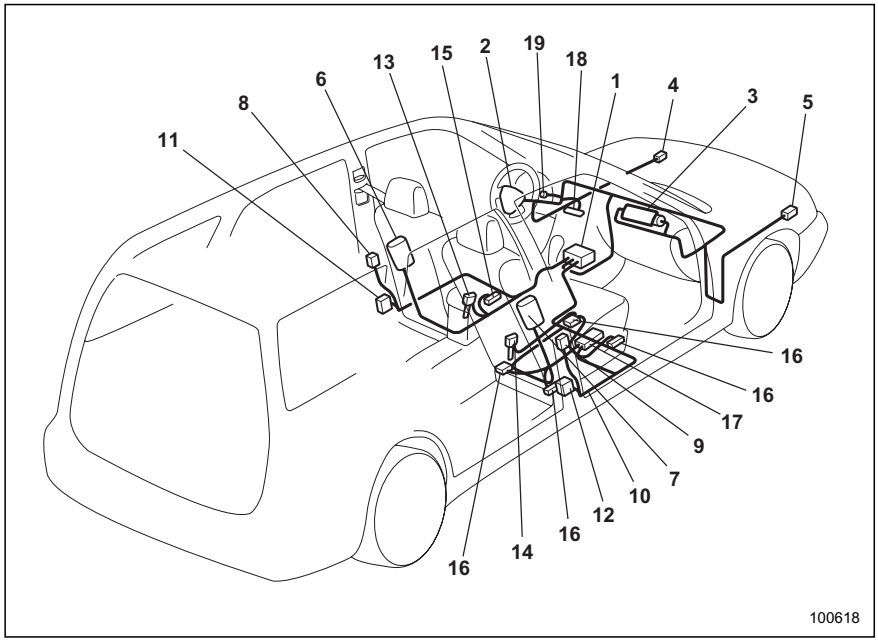

1) Airbag control module (including impact sensors)
2) Frontal airbag module (driver's side)
3) Frontal airbag module (front passenger's side)
4) Front sub sensor (left-hand side)
5) Front sub sensor (right-hand side)
6) Side airbag module (driver's side)
7) Side airbag module (front passenger's side)
8) Side airbag sensor (center pillar left-hand side)
9) Side airbag sensor (center pillar right-hand side)
10) Airbag wiring (yellow)
11) Seatbelt pretensioner (driver's side)
12) Seatbelt pretensioner (front passenger's side)
13) Seatbelt buckle switch (driver's side)
14) Seatbelt buckle switch (front passenger's side)
15) Driver's seat position sensor
16) Front passenger's occupant detection system weight sensor
17) Front passenger's occupant detection control module
18) Front passenger's frontal airbag ON and OFF indicator
19) SRS airbag system warning light

– CONTINUED –

Any vehicle whose vehicle identification number's last six digits are "733001" or higher or are "729759", "729760", "729761", "729762", "729763", "729764", "729765", "729899", "729900", "729901", "729902", "729903", "729904" or "729905"

For the location of the vehicle identification number plate, please refer to the "Vehicle identification" section on page 12-10 of this owner's manual.

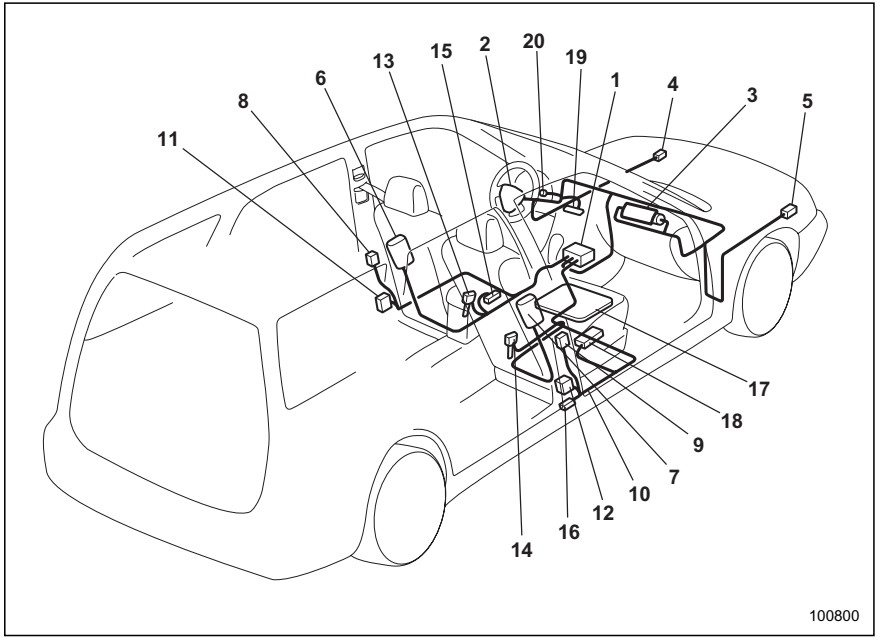

1) Airbag control module (including impact sensors)
2) Frontal airbag module (driver's side)
3) Frontal airbag module (front passenger's side)
4) Front sub sensor (left-hand side)
5) Front sub sensor (right-hand side)
6) Side airbag module (driver's side)
7) Side airbag module (front passenger's side)
8) Side airbag sensor (center pillar left-hand side)
9) Side airbag sensor (center pillar right-hand side)
10) Airbag wiring (yellow)
11) Seatbelt pretensioner (driver's side)
12) Seatbelt pretensioner (front passenger's side)
13) Seatbelt buckle switch (front passenger's side)
14) Seatbelt buckle switch (driver's side)
15) Driver's seat position sensor
16) Front passenger's seatbelt tension sensor
17) Front passenger's occupant detection system weight sensor
18) Front passenger's occupant detection control module
19) Front passenger's frontal airbag ON and OFF indicator
20) SRS airbag system warning light

■ Subaru advanced frontal air-bag system

Your vehicle is equipped with a Subaru advanced frontal airbag system that complies with the new advanced frontal airbag requirements in the amended Federal Motor Vehicle Safety Standard (FMVSS) No. 208.

The Subaru advanced frontal airbag system automatically determines the deployment force of the driver's SRS frontal airbag at the time of deployment as well as whether or not to activate the front passenger's SRS frontal airbag and, if activated, the deployment force of the SRS frontal airbag at the time of deployment.

Your vehicle has warning labels on the driver's and front passenger's sun visors beginning with the phrase "EVEN WITH ADVANCED AIR BAGS" and a tag attached to the glove box lid beginning with the phrase "Even with Advanced Air Bags". Make sure that you carefully read the instructions on the warning labels and tag.

Always wear your seatbelt. The subaru advanced frontal airbag system is a supplemental restraint system and must be used in combination with a seatbelt. All occupants should wear a seatbelt or be seated in an appropriate child restraint system.

The driver's SRS frontal airbag is stowed in the center portion of the steering wheel. The front passenger's SRS frontal airbag is stowed near the top of the dashboard under an "SRS AIRBAG" mark.

In a moderate to severe frontal collision, the driver's and front passenger's SRS frontal airbags deploy and supplement the seatbelts by reducing the impact on the driver's and front passenger's head and chest.

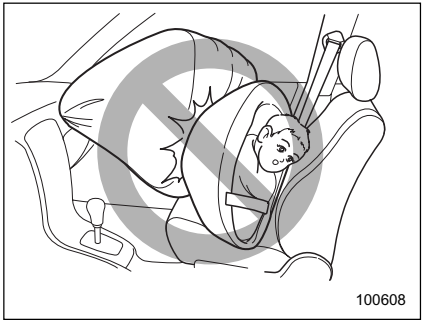
100608

⚠ WARNING

NEVER INSTALL A REARWARD FACING CHILD SEAT IN THE FRONT SEAT. DOING SO RISKS SERIOUS INJURY OR DEATH TO THE CHILD BY PLACING THE CHILD'S HEAD TOO CLOSE TO THE SRS AIRBAG.

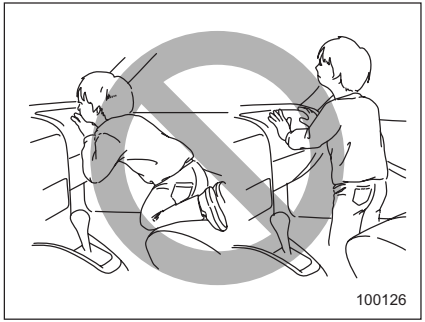
100126

⚠ WARNING

Never allow a child to stand up, or to kneel on the front passenger's seat. The SRS airbag deploys with considerable force and can injure or even kill the child.

– CONTINUED –

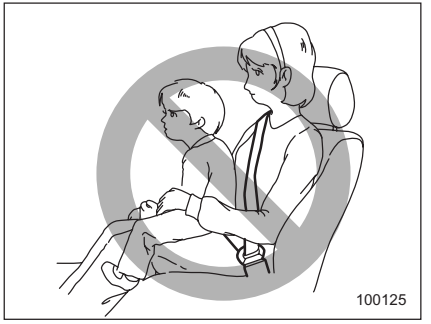

⚠ WARNING

Never hold a child on your lap or in your arms. The SRS airbag deploys with considerable force and can injure or even kill the child.

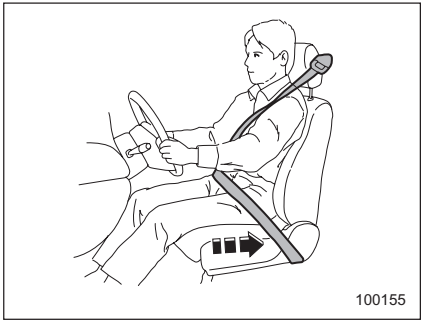

⚠ WARNING

The SRS airbag deploys with considerable speed and force. Occupants who are out of proper position when the SRS airbag deploys could suffer very serious injuries. Because the SRS airbag needs enough space for deployment, the driver should always sit upright and well back in the seat as far from the steering wheel as practical while still maintaining full vehicle control and the front passenger should move the seat as far back as possible and sit upright and well back in the seat.

It is also important to wear your seatbelt to help avoid injuries that can result when the SRS airbag contacts an occupant not in proper position such as one thrown toward the front of the vehicle during pre-accident braking.

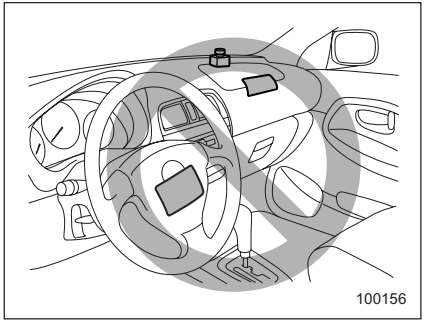

⚠ WARNING

Do not put any objects over the steering wheel pad and dashboard. If the SRS frontal airbag deploys, those objects could interfere with its proper operation and could be propelled inside the vehicle and cause injury.

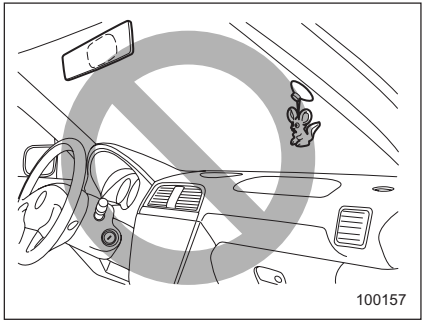

⚠ WARNING

Do not attach accessories to the windshield, or fit an extra-wide mirror over the rear view mirror. If the SRS airbag deploys, those objects could become projectiles that could seriously injure vehicle occupants.

▼ Driver's SRS frontal airbag

The driver's SRS frontal airbag uses a dual stage inflator. The inflator operates in different ways depending on the severity of impact, backward-forward adjustment of the driver's seat position and whether or not he/she is wearing the seatbelt.
The backward-forward adjustment of the driver's seat position is monitored by the driver's seat position sensor under the driver's seat.
Whether or not the driver is wearing the seatbelt is monitored by the seatbelt buckle switch.
Observe the following precautions. Failure to do so may cause the seatbelt buckle switch and/or the seat position sensor to malfunction, preventing the Subaru advanced frontal airbag system from functioning correctly or causing the system to fail.

- Do not place articles/metal objects or install any accessory other than a genuine SUBARU accessory under the driver's seat. Do not allow the rear seat occupant to kick the driver's seat or push up its bottom surface with his/her feet.
- Do not place a magnet near the seatbelt buckle or under the driver's seat.

If the seatbelt buckle switch and/or the driver's seat position sensor have failed, the SRS airbag system warning light will illuminate. Although the driver's SRS frontal airbag can deploy regardless of the backward-forward adjustment of the driver's seat position even when the warning light is on, have the system inspected by your SUBARU dealer immediately if the SRS airbag system warning light comes on.

NOTE

The driver's SRS side airbag and seatbelt pretensioner are not controlled by the Subaru advanced frontal airbag system.

▼ Front passenger's SRS frontal airbag

The front passenger's SRS frontal airbag uses a dual stage inflator. The inflator operates in different ways depending on the severity of impact.
The total load on the seat is monitored by the occupant detection system's weight sensor located under the seat.
For any vehicle whose vehicle identification number's last six digits are shown on page 1-40 of this owner's manual, the system has another sensor that monitors the tension of the front passenger seatbelt. Using the total seat load and seatbelt tension data from the sensors (if equipped), the occupant detection system determines whether the front passenger's SRS frontal airbag should or should not be inflated.
The occupant detection system may not inflate the front passenger's SRS frontal airbag even when the driver's SRS frontal airbag deploys. This is normal.
Observe the following precautions. Failure to do so may prevent the Subaru ad-

– CONTINUED –

vanced frontal airbag system from functioning correctly or cause the system to fail.

- Do not apply any strong impact to the front passenger's seat such as by kicking.
- Do not spill liquid on the front passenger's seat. If liquid is spilled, wipe it off immediately.
- Do not remove or disassemble the front passenger's seat.
- Do not install any accessory (such as an audio amplifier) other than a genuine SUBARU accessory under the front passenger's seat.
- Do not place anything (shoes, umbrella, etc.) under the front passenger's seat.
- The front passenger's seat must not be used with the head restraint removed.
- Do not leave any article including a child restraint system on the front passenger's seat or the seatbelt tongue and buckle engaged when you leave your vehicle.
- Do not place a magnet near the seatbelt buckle and the seatbelt retractor.
- Do not use front seats with their backward-forward position and seatback not being locked into place securely. If any of them are not locked securely, adjust them again. For adjusting procedure, refer to the "Manual seat" in the front seats section in Chapter 1 in this owner's manual. (Models equipped with manual seats only)
- If you use an optional seatbelt extender, remove it after each use. (Refer to the "Seatbelt extender" section in this chapter.)

If the seatbelt buckle switch and/or front passenger's occupant detection system have failed, the SRS airbag system warning light will illuminate. Have the system inspected by your SUBARU dealer immediately if the SRS airbag system warning light comes on.
If your vehicle has sustained impact, this may affect the proper function of the Subaru advanced frontal airbag system. Have your vehicle inspected at your SUBARU dealer.

NOTE

The front passenger's SRS side airbag and seatbelt pretensioner are not controlled by the Subaru advanced frontal airbag system.

▼ Passenger's frontal airbag ON and OFF indicators

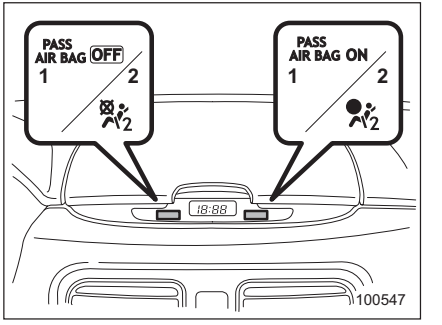

1) U.S.-spec. models
2) Canada-spec. models

PASS AIR BAG ON or 2 :Front passenger's frontal airbag ON indicator
PASS AIR BAG OFF or 2 :Front passenger's frontal airbag OFF indicator

The front passenger's frontal airbag ON and OFF indicators show you the status of the front passenger's SRS frontal airbag. The indicators are located next to the clock in the central portion of the instrument panel.
When the ignition switch is turned to the "ON" position, both the ON and OFF indicators illuminate for 6 seconds during which time the system is checked. Following the system check, both indicators ex-

tinguish for 2 seconds. After this, one of the indicators illuminates depending on the status of the front passenger's SRS frontal airbag reached by the Subaru advanced frontal airbag system monitoring.
If the front passenger's SRS frontal airbag is activated, the passenger's frontal airbag ON indicator will illuminate while the OFF indicator will remain extinguished.
If the front passenger's SRS frontal airbag is deactivated, the passenger's frontal airbag ON indicator will remain extinguished while the OFF indicator will illuminate.
With the ignition switch turned to the "ON" position, if both the ON and OFF indicators remain lit or extinguished simultaneously even after the system check period, the system is faulty. Contact your SUBARU dealer immediately for an inspection.

▼ Conditions in which front passenger's SRS frontal airbag is not activated

The front passenger's SRS frontal airbag will not be activated when any of the following conditions are met regarding the front passenger's seat:
- The seat is empty.
- The seat is equipped with a rearward facing child restraint system and an infant is restrained with it. (See WARNING that follows.)
- The seat is equipped with a forward facing child restraint system and a small child is restrained with it. (See WARNING that follows.)
- The seat is equipped with a booster seat and a small child is in the booster seat. (See WARNING that follows.)
- The seat is relieved of the occupant load for a time exceeding the predetermined period.
- The seat is occupied by a child who has outgrown a child restraint system (See WARNING that follows.) or a small adult.
- The front passenger's occupant detection system is faulty.

⚠ WARNING

NEVER INSTALL A REARWARD FACING CHILD SEAT IN THE FRONT PASSENGER'S SEAT EVEN IF THE FRONT PASSENGER'S SRS FRONTAL AIRBAG IS DEACTIVATED. Be sure to install it in the REAR seat in a correct manner. Also, it is strongly recommended that any forward facing child seat or booster seat be installed in the REAR seat, and that even children who have outgrown a child restraint system be also seated in the REAR seat. This is because children sitting in the front passenger's seat may be killed or severely injured should the front passenger's SRS frontal airbag deploy. REAR seats are the safest place for children.

When the front passenger's seat is occupied by a child, observe the following precautions. Failure to do so may increase the load on the front passenger's seat, activating the front passenger's SRS frontal airbag even though that seat is occupied by a child.
- Do not place any article on the seat other than the child occupant and a child restraint system.

– CONTINUED –

- Do not place more than one child on the seat.
- Do not install any accessory such as a table or TV onto the seatback.
- Do not store a heavy load in the seatback pocket.
- Do not allow the rear seat occupant to place his/her hands or legs on the front passenger's seatback, or allow him/her to pull the seatback.

▽ **If the front passenger's frontal airbag ON indicator illuminates and the OFF indicator extinguishes even when an infant or a small child is in a child restraint system (including booster seat)**

Turn the ignition switch to the "OFF" position if the front passenger's frontal airbag ON indicator illuminates and the OFF indicator extinguishes even when an infant or a small child is in a child restraint system (including booster seat). Remove the child restraint system from the seat. By referring to the child restraint manufacturer's recommendations as well as the child restraint system installation procedures in the "Child restraint systems" section in this chapter, correctly install the child restraint system. Turn the ignition switch to the "ON" position and make sure that the front passenger's frontal airbag ON indicator goes out and the OFF indicator comes on.

If the ON indicator still illuminates while the OFF indicator extinguishes, take the following actions.
- Ensure that no article is placed on the seat other than the child restraint system and the child occupant.
- Ensure that there is no article left in the seatback pocket.
- Ensure that the backward-forward position and seatback of front passenger's seat are locked into place securely by moving the seat back and forth. (Models equipped with manual seats only)

If the ON indicator still illuminates while the OFF indicator extinguishes after taking relevant corrective actions described above, relocate the child restraint system to the rear seat and immediately contact your SUBARU dealer for an inspection.

NOTE

When a child who has outgrown a child restraint system or a small adult is seated in the front passenger's seat, the Subaru advanced frontal airbag system may or may not activate the front passenger's SRS frontal airbag depending on the occupant's seating posture. If the front passenger's SRS frontal airbag is activated (the ON indicator illuminates while the OFF indicator extinguishes), take the following actions.
- **Ensure that no article is placed on the seat other than the occupant.**
- **Ensure that there is no article left in the seatback pocket.**

If the ON indicator still illuminates while the OFF indicator extinguishes despite the fact that the actions noted above have been taken, seat the child/small adult in the rear seat and immediately contact your SUBARU dealer for an inspection. Even if the system has passed the dealer inspection, it is recommended that on subsequent trips the child/small adult always take the rear seat.

Children who have outgrown a child restraint system should always wear the seatbelt irrespective of whether the airbag is deactivated or activated.

▼ **Conditions in which front passenger's SRS frontal airbag is activated**

The front passenger's SRS frontal airbag will be activated for deployment upon impact when any of the following conditions is met regarding the front passenger's seat.
- When the seat is occupied by an adult.

• When a heavy article is placed on the seat.

When the front passenger's seat is occupied by an adult, observe the following precautions. Failure to do so may lessen the load on the front passenger's seat, deactivating the front passenger's SRS frontal airbag despite the fact that the seat is occupied by an adult.
• Do not allow the rear seat occupant to lift the front passenger's seat cushion using his/her feet.
• Do not place any article under the front passenger's seat, or squeeze any article from behind and under the seat. This may lift the seat cushion.
• Do not squeeze any article between the front passenger's seat and side trim/pillar, door or center console box. This may lift the seat cushion.

▽ **If the passenger's frontal airbag OFF indicator illuminates and the ON indicator extinguishes even when the front passenger's seat is occupied by an adult**

This can be caused by the adult incorrectly sitting in the front passenger's seat. Turn the ignition switch to the "OFF" position. Ask the front passenger to set the seatback to the upright position, sit up straight in the center of the seat cushion, correctly fasten the seatbelt, position his/her legs out forward, and adjust the seat to the rearmost position. Turn the ignition switch to the "ON" position. If the OFF indicator remains illuminated while the ON indicator remains extinguished, take the following actions.
• Turn the ignition switch to the "OFF" position.
• Ensure that there is no article, book, shoe, or other object trapped under the seat, at the rear of the seat, or on the side of the seat.
• Ensure that the backward-forward position and seatback of front passenger's seat are locked into place securely by moving the seat back and forth. (Models equipped with manual seats only)
• Next, turn the ignition switch to the "ON" position and wait 6 seconds to allow the system to complete self-checking. Following the system check, both indicators extinguish for 2 seconds. Now, the ON indicator should illuminate while the OFF indicator remains extinguished.

If the OFF indicator still illuminates while the ON indicator remains extinguished, ask the occupant to move to the rear seat and immediately contact your SUBARU dealer for an inspection.

▼ **Effect vehicle modifications made for persons with disabilities may have on Subaru advanced frontal airbag system operation (U.S. only)**

Changing or moving any parts of the front seats, seat belts, front bumper, front side frame, instrument panel, combination meter, steering wheel, steering column, tire, suspension or floor panel can affect the operation of the Subaru advanced airbag system. If you have any questions, you may contact the following Subaru distributors:

<Continental U.S., Alaska and the District of Columbia>
Subaru of America, Inc.
Customer Dealer Services Department
P.O. Box 6000
Cherry Hill, NJ 08034-6000
1-800-SUBARU3 (1-800-782-2783)

<Hawaii>
Schuman Carriage Motors, Inc.
1234 South Beretania Street, Honolulu, HI 96814
808-592-4497

<Guam>
Triple J Enterprises, Inc.
P.O. Box 6066, Tamuning, Guam 96931
671-646-9126

– CONTINUED –

<Puerto Rico>
Trebol Subaru of Puerto Rico, Inc.
P.O. Box 11204, San Juan, Puerto Rico 00910
787-793-2828

There are currently no Subaru distributors in any other U.S. territories. If you are in such an area, please contact the Subaru distributor or dealer from which you bought your vehicle.

▼ **Operation**

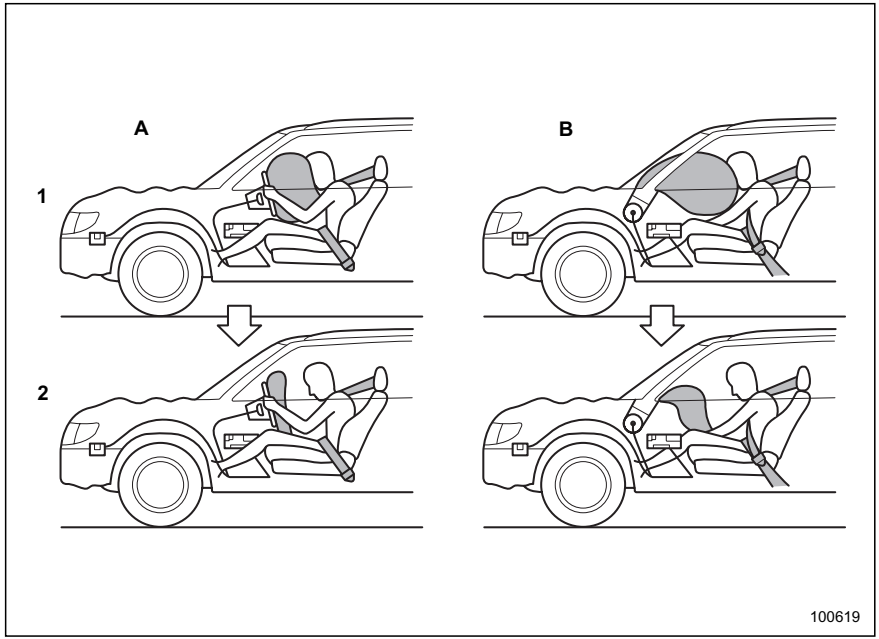

A) Driver's side
B) Passenger's side
1) SRS AIRBAGs deploy as soon as a collision occurs.
2) After deployment, SRS AIRBAGs start to deflate immediately so that the driver's vision is not obstructed.

The SRS airbag can function only when the ignition switch is in the "ON" position. The Subaru advanced frontal airbag system is designed to determine the activation or deactivation condition of the front passenger's SRS frontal airbag depending on the total load on the front passenger's seat monitored by the front passenger's occupant detection system weight sensor. For this reason, only the driver's SRS frontal airbag may deploy in the event of a collision, but this does not mean failure of the system.

If the front sub sensors inside both front fenders and the impact sensors in the airbag control module detect a predetermined amount of force during a frontal collision, the control module sends signals to the airbag module(s) (only driver's module or both driver's and front passenger's modules) instructing the module(s) to inflate the SRS frontal airbag(s). The driver's and front passenger's SRS frontal airbags use dual stage inflators. The two inflators of each airbag are triggered either sequentially or simultaneously, depending on the severity of impact, backward-forward adjustment of the driver's seat position and fastening/unfastening of the seatbelt in the case of the driver's SRS frontal airbag and depending on the severity of impact and the total load on the seat in the

– CONTINUED –

case of the front passenger's SRS frontal airbag. After deployment, the SRS airbags immediately start to deflate so that the driver's vision is not obstructed. The time required from detecting impact to the deflation of the SRS airbag after deployment is shorter than the blink of an eye.

Both when only the driver's SRS frontal airbag deploys and the driver's and front passenger's SRS frontal airbags deploy, the driver's and front passenger's seatbelt pretensioners operate at the same time.

Although it is highly unlikely that the SRS airbag would activate in a non-accident situation, should it occur, the SRS airbag will deflate quickly, not obscuring vision and will not interfere with the driver's ability to maintain control of the vehicle.

When the SRS airbag deploys, a sudden, fairly loud inflation noise will be heard and some smoke will be released. These occurrences are a normal result of the deployment. This smoke does not indicate a fire in the vehicle.

⚠ CAUTION

Do not touch the SRS airbag system components around the steering wheel and dashboard with bare hands right after deployment. Doing so can cause burns because the components can be very hot as a result of deployment.

The driver's SRS frontal airbag and front passenger's SRS frontal airbag are designed to deploy in the event of an accident involving a moderate to severe frontal collision. They are basically not designed to deploy in lesser frontal impacts because the necessary protection can be achieved by the seatbelt alone. Also, they are basically not designed to deploy in side or rear impacts or in roll-over accidents because deployment of only the driver's SRS frontal airbag or both driver's and front passenger's SRS frontal airbags would not help the occupant in those situations. The driver's and front passenger's SRS frontal airbags are designed to function on a one-time-only basis.

SRS airbag deployment depends on the level of force experienced in the passenger compartment during a collision. That level differs from one type of collision to another, and it may have no bearing on the visible damage done to the vehicle itself.

▽ **Examples of accidents in which the driver's/driver's and front passenger's SRS frontal airbag(s) will most likely deploy.**

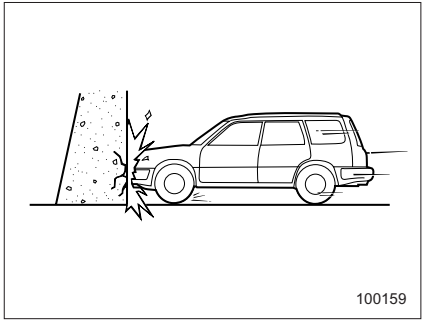

A head-on collision against a thick concrete wall at a vehicle speed of 12 to 19 mph (20 to 30 km/h) or higher activates only the driver's SRS frontal airbag or both driver's and front passenger's SRS frontal airbags. The airbag(s) will also be activated when the vehicle is exposed to a frontal impact similar in fashion and magnitude to the collision described above.

▽ **Examples of the types of accidents in which it is possible that the driver's/driver's and front passenger's SRS frontal airbag(s) will deploy.**

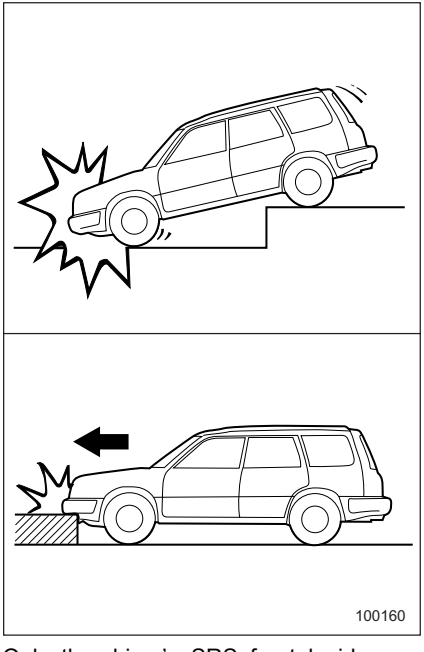

Only the driver's SRS frontal airbag or both driver's and front passenger's SRS frontal airbags may be activated when the vehicle sustains a hard impact in the undercarriage area from the road surface (such as when the vehicle plunges into a deep ditch, is severely impacted or knocked hard against an obstacle on the road such as a curb).

▽ **Examples of the types of accidents in which deployment of the driver's/driver's and front passenger's SRS frontal airbag(s) is unlikely to occur.**

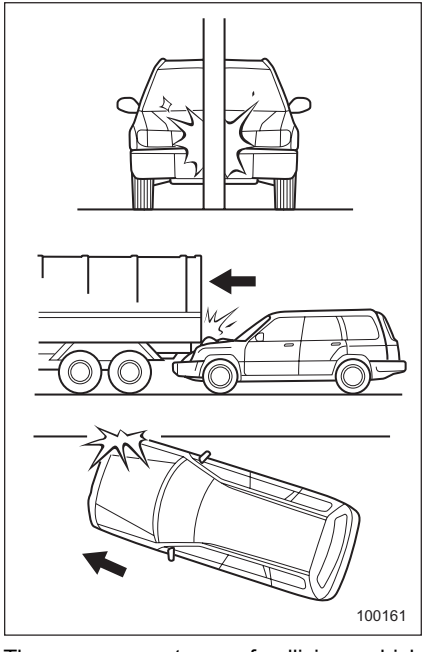

There are many types of collisions which might not necessarily require deployment

– CONTINUED –

of driver's/driver's and front passenger's SRS frontal airbag(s). If the vehicle strikes an object, such as a telephone pole or sign pole, or if it slides under a truck's load bed, or if it sustains an oblique offset frontal impact, the driver's/driver's and front passenger's SRS frontal airbag(s) may not deploy depending on the level of accident forces involved.

▽ **Examples of the types of accidents in which the driver's/driver's and front passenger's SRS frontal airbag(s) will basically not deploy.**

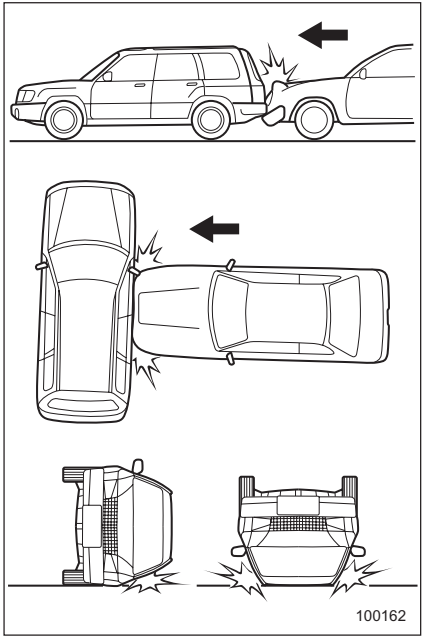

The driver's and front passenger's SRS frontal airbags are designed basically not to deploy if the vehicle is struck from the side or from behind, or if it rolls onto its side or roof, or if it is involved in a low-speed frontal collision.

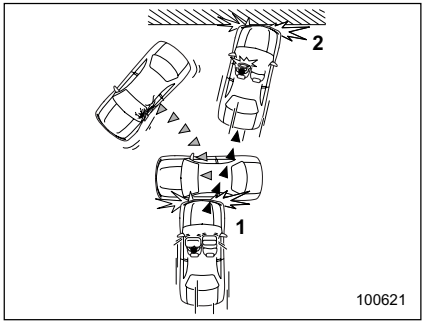

1) First impact
2) Second impact

In an accident where the vehicle is impacted more than once, the driver's and/or front passenger's SRS frontal airbag(s) will deploy only once on the first impact.

Example: In the case of a double collision, first with another vehicle, then against a concrete wall in immediate succession, once either or both of the driver's and front passenger's SRS frontal airbags is/are activated on the first impact, it/they will not be activated on the second impact.

■ SRS side airbag (if equipped)

The SRS side airbag is stored in the door side of each front seat seatback, which bears an “SRS AIRBAG” label.
In a moderate to severe side impact collision, the SRS side airbag on the impacted side of the vehicle deploys between the occupant and the door panel and supplements the seatbelt by reducing the impact on the occupant’s chest and head.

⚠ WARNING

The SRS side airbag is designed as only a supplement to the primary protection provided by the seatbelt. They do not do away with the need to fasten seatbelts. It is also important to wear your seatbelt to help avoid injuries that can result when an occupant is not seated in a proper upright position.

⚠ WARNING

Do not sit or lean unnecessarily close to either front door. The SRS side airbag is stored in both front seat seatbacks next to the door, and it provides protection by deploying rapidly (faster than the blink of an eye) in the event of a side impact collision. However, the force of SRS side airbag deployment may cause injuries if your head or other parts of the body are too close to the SRS side airbag.

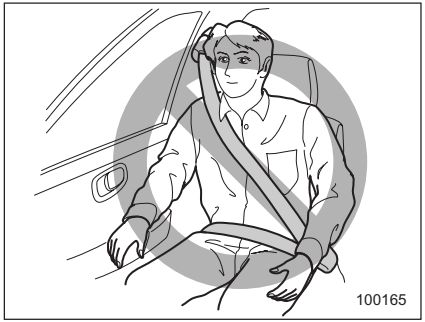

⚠ WARNING

Do not rest your arm on either front door or its internal trim. It could be injured in the event of SRS side airbag deployment.

– CONTINUED –

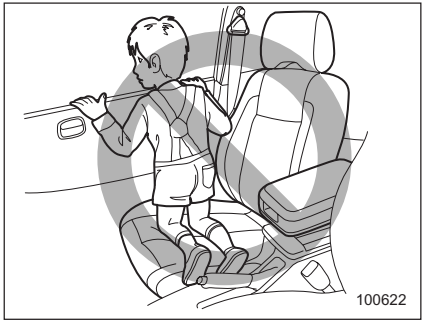

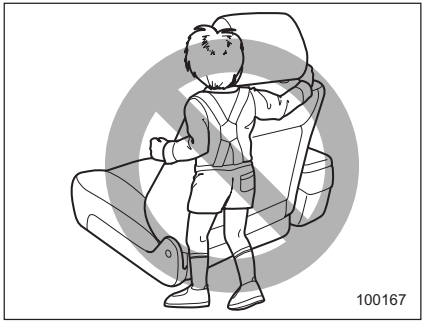

⚠ WARNING

Never allow a child to kneel on the front passenger's seat facing the side window or to wrap his/her arms around the front seat seatback. In the event of an accident, the force of the SRS side airbag deployment could injure the child seriously because his/her head or arms or other parts of the body are too close to the SRS side airbag. Since your vehicle is also equipped with a passenger's SRS frontal airbag, children aged 12 and under should be placed in the rear seat anyway and should be properly restrained at all times.

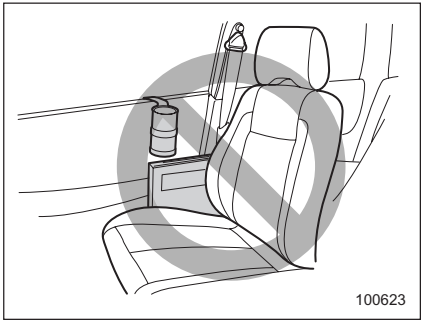

⚠ WARNING

Do not attach accessories to the door trim or near either SRS side airbags and do not place objects near the SRS side airbags. In the event of the SRS side airbag deployment, they could be propelled dangerously toward the vehicle's occupants and cause injuries.

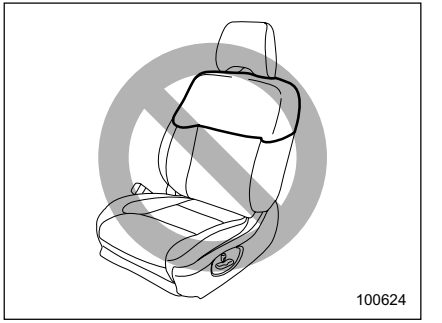

⚠ WARNING

Do not put any kind of cover or clothes or other objects over either front seatback and do not attach labels or stickers to the front seat surface on or near the SRS side airbag. They could prevent proper deployment of the SRS side airbag, reducing protection available to the front seat's occupant.

▼ Operation

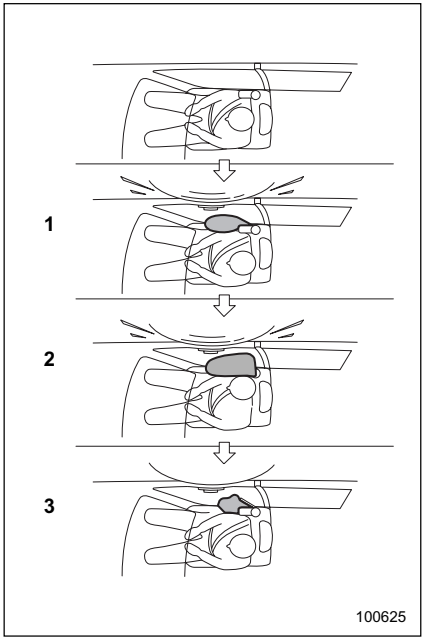

1) SRS side airbag deploys as soon as a collision occurs.
2) SRS side airbag protects the front passenger's head and chest.
3) After deployment, SRS side airbag starts to deflate immediately.

The SRS side airbag can function only when the ignition switch is in the "ON" position.

The driver's and front passenger's SRS side airbags deploy independently of each other since each has its own impact sensor. Also, the SRS side airbag deploys independently of the frontal airbags in the steering wheel and instrument panel.

An impact sensor is incorporated into each of the vehicle's center pillars. If either sensor detects a certain predetermined amount of force during a side impact collision, the control module sends a signal to the side airbag module on the impacted side of the vehicle, instructing it to inflate the SRS side airbag. Then the side airbag module produces gas, which instantly inflates the SRS side airbag. After deployment, the SRS side airbag will deflate in a few seconds.

The SRS side airbag deploys even when no one occupies the seat on the side on which an impact is applied.

When the SRS side airbag deploys, a sudden, fairly loud inflation noise will be heard and some smoke will be released. These occurrences are a normal result of the deployment. This smoke does not indicate a fire in the vehicle.

– CONTINUED –

⚠ CAUTION

Do not touch the SRS side airbag system components around the front seat seatback with bare hands right after deployment. Doing so can cause burns because the components can be very hot as a result of deployment.

The SRS side airbag is designed to deploy in the event of an accident involving a moderate to severe side impact collision. It is basically not designed to deploy in a lesser side impact. Also, it is basically not designed to deploy in frontal or rear impacts because SRS side airbag deployment would not help the occupant in those situations.
Each SRS side airbag is designed to function on a one-time-only basis.

SRS side airbag deployment depends on the level of force experienced in the passenger compartment during a side impact collision. That level differs from one type of collision to another, and it may have no bearing on the visible damage done to the vehicle itself.

▽ **Example of the type of accident in which the SRS side airbag will most likely deploy.**

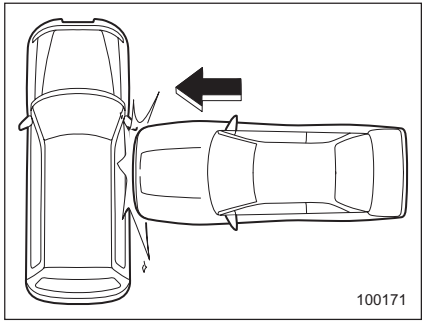

A severe side impact near the front seat activates the SRS side airbag.

▽ **Examples of the types of accidents in which the SRS side airbag is unlikely to deploy.**

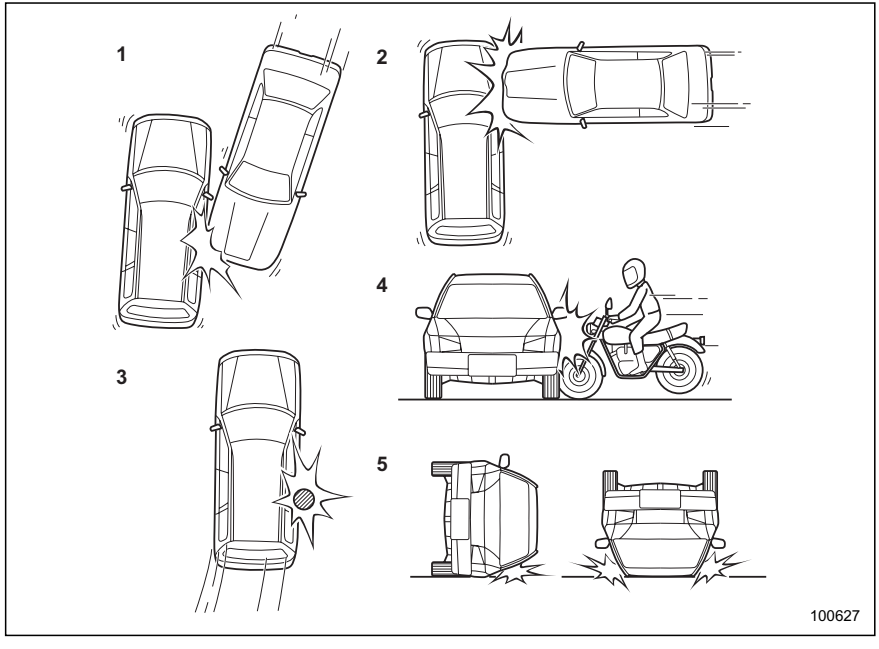

1) The vehicle is involved in an oblique side-on impact.
2) The vehicle is involved in a side-on impact in an area outside the vicinity of the passenger compartment.
3) The vehicle strikes a telephone pole or similar object.
4) The vehicle is involved in a side-on impact from a motorcycle.
5) The vehicle rolls onto its side or roof.

There are many types of collisions which might not necessarily require SRS side airbag deployment. In the event of accidents like those illustrated, the SRS side airbag may not deploy depending on the level of accident forces involved.

– CONTINUED –

▽ **Examples of the types of accidents in which the SRS side airbag will basically not deploy.**

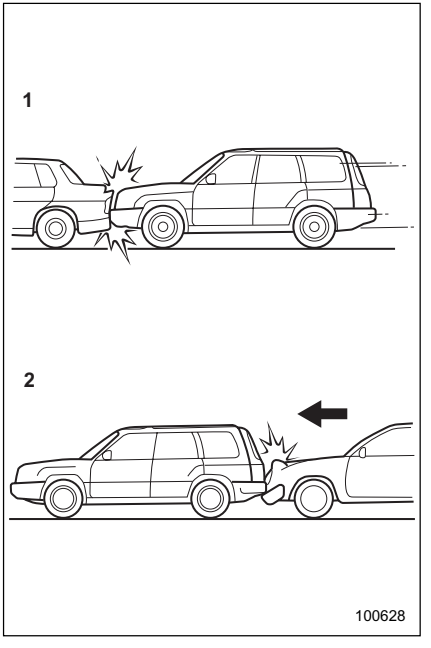

1) The vehicle is involved in frontal collision with another vehicle (moving or stationary).
2) The vehicle is struck from behind.

The SRS side airbag is basically not designed to deploy if the vehicle is involved in a frontal collision or is struck from behind. Examples of such accidents are illustrated.

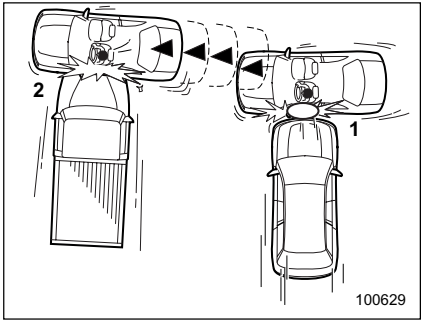

1) First impact
2) Second impact

In an accident where the vehicle is struck from the side more than once, the SRS side airbag deploys only once on the first impact.

Example: In the case of a double side impact collision, first with one vehicle and immediately followed by another from the same direction, once the SRS side airbag is activated on the first impact, it will not be activated on the second.

■ SRS airbag system monitors

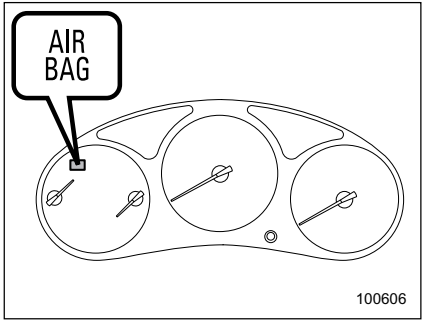

A diagnostic system continually monitors the readiness of the SRS airbag system (including front seatbelt pretensioners) while the vehicle is being driven. The SRS airbag system warning light “AIRBAG” will show normal system operation by lighting for approximately 6 seconds when the ignition switch is turned to the “ON” position.

The following components are monitored by the indicator:

- Front sub sensor (Right-hand side)
- Front sub sensor (Left-hand side)
- Airbag control module (including impact sensors)
- Frontal airbag module (Driver’s side)
- Frontal airbag module (Front passenger’s side)

- Side airbag sensor (Center pillar right-hand side)
- Side airbag sensor (Center pillar left-hand side)
- Side airbag module (Driver's side)
- Side airbag module (Front passenger's side)
- Seatbelt pretensioner (Driver's side)
- Seatbelt pretensioner (Front passenger's side)
- Seatbelt buckle switch (Driver's side)
- Seatbelt buckle switch (Front passenger's side)
- Driver's seat position sensor
- Front passenger's seatbelt tension sensor (if equipped)
- Front passenger's occupant detection system weight sensor
- Front passenger's occupant detection control module
- Front passenger's frontal airbag ON and OFF indicator
- All related wiring

WARNING

If the warning light exhibits any of the following conditions, there may be a malfunction in the seatbelt pretensioners and/or SRS airbag system. Immediately take your vehicle to your nearest SUBARU dealer to have the system checked. Unless checked and properly repaired, the seatbelt pretensioners and/or SRS airbags will not operate properly in the event of a collision, which may increase the risk of injury.

- **Flashing or flickering of the warning light**
- **No illumination of the warning light when the ignition switch is first turned to the "ON" position**
- **Continuous illumination of the warning light**
- **Illumination of the warning light while driving**

■ SRS airbag system servicing

WARNING

- **When discarding an airbag module or scrapping the entire vehicle damaged by a collision, consult your SUBARU dealer.**
- **The SRS airbag has no user-serviceable parts. Do not use electrical test equipment on any circuit related to the SRS airbag system. For required servicing of the SRS airbag, see your nearest SUBARU dealer. Tampering with or disconnecting the system's wiring could result in accidental inflation of the SRS airbag or could make the system inoperative, which may result in serious injury. The wiring harnesses of the SRS airbag system are covered with yellow insulation and system connectors are yellow for easy identification.**

– CONTINUED –

CAUTION

If you need service or repair in areas listed below, have an authorized SUBARU dealer perform the work. The SRS airbag control module, impact sensors and airbag modules are stored in these areas.

- **Under the center console**
- **Inside each front fender**
- **Steering wheel and column and nearby areas**
- **Top of the dashboard on front passenger's side and nearby areas**
- **Each front seat and nearby area**
- **Inside each center pillar**

In the event that the SRS airbag is deployed, replacement of the system should be performed only by an authorized SUBARU dealer. When the components of the SRS airbag system are replaced, use only genuine SUBARU parts.

To ensure their long-term reliability, the SRS airbags must be inspected by a SUBARU dealer ten years after the date of manufacture, which is shown on the certification plate attached to the driver's door jamb.

NOTE

In the following cases, contact your SUBARU dealer as soon as possible.

- **The front part of the vehicle was involved in an accident in which only the driver's SRS frontal airbag or both driver's and front passenger's SRS frontal airbags did not deploy.**
- **The pad section of the steering wheel or front passenger's frontal airbag cover is scratched, cracked, or otherwise damaged.**

In addition, if your vehicle is equipped with SRS side airbags, contact your SUBARU dealer as soon as possible in the following cases.

- **Either center pillar or a nearby area of the vehicle was involved in an accident in which the SRS side airbag did not deploy.**
- **The fabric or leather of either front seatback is cut, frayed, or otherwise damaged.**

■ Precautions against vehicle modification

WARNING

- **To avoid accidental activation of the system or rendering the system inoperative, which may result in serious injury, no modifications should be made to any components or wiring of the SRS airbag system.**

  This includes following modifications:

  - **Installation of custom steering wheels**
  - **Attachment of additional trim materials to the dashboard**
  - **Installation of custom seats**
  - **Replacement of seat fabric or leather**
  - **Installation of additional fabric or leather on the front seat**

- **Installation of additional electrical/electronic equipment such as a mobile two-way radio on or near the SRS airbag system components and/or wiring is not advisable. This could interfere with proper operation of the SRS airbag system.**

CAUTION

Do not perform any of the following modifications. Such modifications can interfere with proper operation of the SRS airbag system.

- **Attachment of any equipment (brush bar, winches, snow plow, skid plate, etc.) other than genuine SUBARU accessory parts to the front end.**
- **Modification of the suspension system or front end structure.**
- **Installation of a tire of different size and construction from the tires specified on the vehicle placard attached to the driver's door pillar or specified for individual vehicle models in this Owner's Manual.**
- **Attachment of any equipment (side steps or side sill protectors, etc.) other than genuine SUBARU accessory parts to the side body.**

Always consult your SUBARU dealer if you want to install any accessory parts on your vehicle.

Keys 2-2
Key number 2-2
Immobilizer (if equipped) 2-3
Security ID plate 2-3
Security indicator light 2-3
Key replacement 2-4
Door locks 2-4
Locking and unlocking from the outside 2-4
Locking and unlocking from the inside 2-5
Power door locking switches 2-6
Key lock-in prevention function 2-6
Remote keyless entry system 2-6
Locking the doors 2-7
Unlocking the doors 2-7
Illuminated entry 2-8
Vehicle finder function 2-8
Sounding a panic alarm 2-8
Selecting audible signal operation 2-8
Replacing the battery 2-8
Replacing lost transmitters 2-9
Alarm system 2-12
System operation 2-12
Activating and deactivating the alarm system 2-13
If you have accidentally triggered the alarm system 2-13
Arming the system 2-13
Disarming the system 2-14
Valet mode 2-15
Passive arming 2-15
Tripped sensor identification 2-16
Shock sensors (dealer option) 2-16
Child safety locks 2-17
Windows 2-18
Power windows 2-18
Rear gate 2-20
Moonroof (if equipped) 2-21
To open the moonroof 2-21
To close the moonroof 2-21
Anti-entrapment function 2-21

Keys

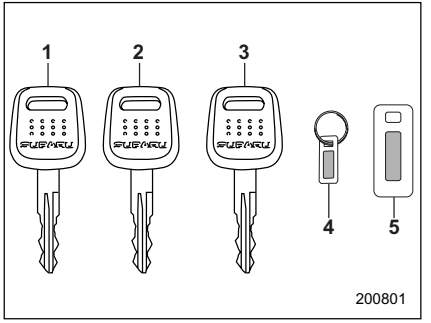

Vehicle with immobilizer system
1) Master key (Black)
2) Submaster key (Black)
3) Valet key (Gray)
4) Key number plate
5) Security ID plate

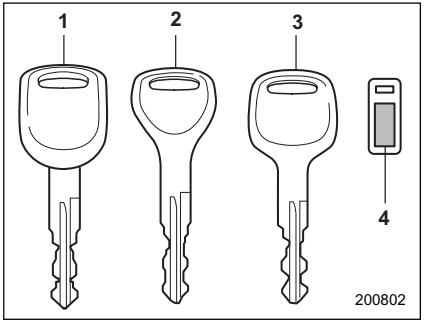

Vehicle without immobilizer system
1) Master key
2) Submaster key
3) Valet key
4) Key number plate

Three types of keys are provided for your vehicle:
Master key, submaster key and valet key.

The master key and submaster key fit all locks on your vehicle.
- Ignition switch
- Driver's door
- Glove box

The valet key fits only the ignition switch and door lock. You can keep the glove box locked when you leave your vehicle and valet key at a parking facility.

⚠ CAUTION

Do not attach a large key holder or key case to either key. If it bangs against your knees while you are driving, it could turn the ignition switch from the ON position to the ACC or OFF position, thereby stopping the engine.

■ Key number

The key number is stamped on the key number plate attached to the key set. Write down the key number and keep it in another safe place, not in the vehicle. This number is needed to make a replacement key if you lose your key or lock it inside the vehicle.

For information on making replacement keys for vehicles with the immobilizer system, refer to the "Immobilizer (if equipped)" section in this chapter.

Immobilizer (if equipped)

The immobilizer system is designed to prevent an unauthorized persons from starting the engine. Only keys registered with your vehicle's immobilizer system can be used to operate your vehicle. Even if an unregistered key fits into the ignition switch and can be turned to the "START" position, the engine will automatically stop after several seconds.

Each immobilizer key contains a transponder in which the key's ID code is stored. When a key is inserted into the ignition switch and turned to the "ON" position, the transponder transmits the key's ID code to the immobilizer system's receiver. If the transmitted ID code matches the ID code registered in the immobilizer system, the system allows the engine to be started. Since the ID code is transmitted and acted upon almost instantly, the immobilizer system does not impede normal starting of the engine.
If the engine fails to start, pull out the key once before trying again. (Refer to the "Ignition switch" section [chapter 3].)

This device complies with Part 15 of the FCC Rules and with RSS-210 of Industry Canada. Operation is subject to the following two conditions: (1) This device may not cause harmful interference, and (2) this device must accept any interference received, including interference that may cause undesired operation.
Changes or modifications not expressly approved by the party responsible for compliance could void the user's authority to operate the equipment.

NOTE

To protect your vehicle from theft, please pay close attention to the following security precautions:
- **Never leave your vehicle unattended with its keys inside.**
- **Before leaving your vehicle, close all windows and lock the doors and rear gate.**
- **Do not leave spare keys or any record of your key number in the vehicle.**

CAUTION

- **Do not place the key under direct sunlight or anywhere it may become hot.**
- **Do not get the key wet. If the key gets wet, wipe it dry with a cloth immediately.**

■ Security ID plate

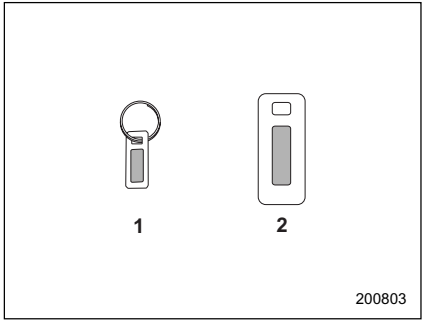

1) Key number plate
2) Security ID plate

The security ID is stamped on the security ID plate attached to the key set. Write down the security ID and keep it in another safe place, not in the vehicle. This number is needed to make a replacement key if you lose your key or lock it inside the vehicle.
This number is also needed for replacement or repair of the engine control module and immobilizer control module.

■ Security indicator light

The security indicator light deters potential thieves by indicating that the vehicle is

– CONTINUED –

equipped with an immobilizer system. It begins flashing approximately 60 seconds after the ignition switch is turned from the “ON” position to the “ACC” or “LOCK” position or immediately after the key is pulled out.
If the security indicator light does not flash, the immobilizer system may be faulty. If this occurs, contact your SUBARU dealer as soon as possible.

In case an unauthorized key is used (e.g. an imitation key), the security indicator light comes on.

NOTE

Even if the security indicator light flashes irregularly or its fuse blows (the light does not flash if its fuse is blown), the immobilizer system will function normally.

■ Key replacement

Your key number plate and security ID plate will be required if you ever need a replacement key made. Any new key must be registered for use with your vehicle’s immobilizer system before it can be used. Up to four keys can be registered for use with one vehicle.
For security, all the keys registered with your vehicle’s immobilizer system will have their ID codes erased and re-registered when a new key is made. Therefore, all of your vehicle’s keys must be presented when a new key is registered. Any key that is not re-registered when a new key is made cannot be used after the other keys are re-registered. For information on replacement keys and on the registration of keys with your immobilizer system, contact your SUBARU dealer.

Door locks

■ Locking and unlocking from the outside

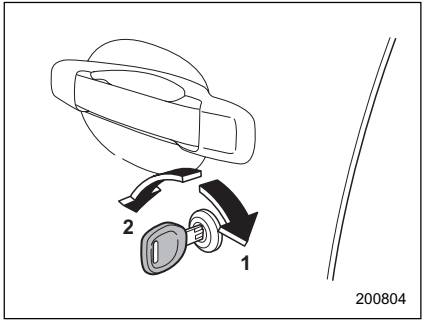

1) Lock
2) Unlock

To lock the driver’s door from the outside with the key, turn the key toward the rear. To unlock the door, turn the key toward the front (Driver’s side only).

Pull the outside door handle to open the unlocked door.

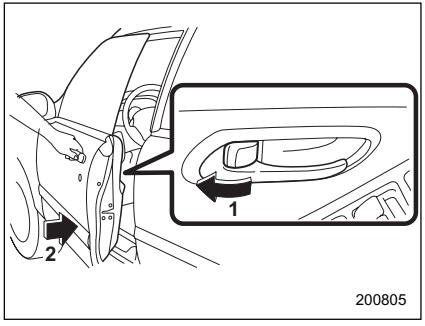

1) Rotate the lock lever rearward.
2) Close the door.

To lock the door from the outside without the key, rotate the lock lever rearward and then close the door.

To lock the door from the outside using the power door locking switch, push the front side of the switch (“LOCK” side) and then close the door. In this case, all closed doors and the rear gate are locked at the same time.

Always make sure that all doors and the rear gate are locked before leaving your vehicle.

NOTE

Make sure that you do not leave the key inside the vehicle when locking the doors from the outside without the key.

■ Locking and unlocking from the inside

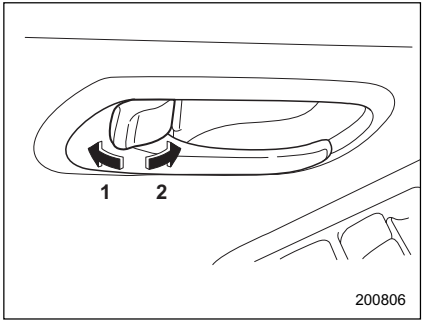

1) Lock
2) Unlock

To lock the door from the inside, rotate the lock lever rearward. To unlock the door from the inside, rotate the lock lever forward.

The red mark on the lock lever appears when the door is unlocked.

Pull the inside door handle to open an unlocked door.

Always make sure that all doors and the rear gate are closed before starting to drive.

⚠ WARNING

Keep all doors locked when you drive, especially when small children are in your vehicle.

Along with the proper use of seatbelts and child restraints, locking the doors reduces the chance of being thrown out of the vehicle in an accident.

It also helps prevent passengers from falling out if a door is accidentally opened, and intruders from unexpectedly opening doors and entering your vehicle.

Power door locking switches

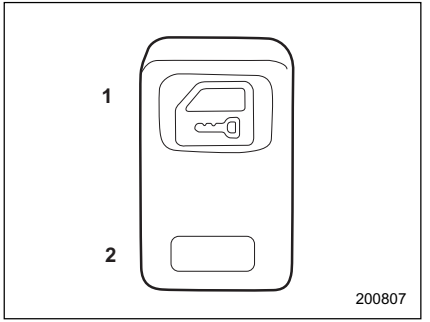

1) Lock
2) Unlock

All doors and the rear gate can be locked and unlocked by the power door locking switches located at the driver's side and the front passenger's side doors.

To lock the doors, push the front side of the switch.
To unlock the doors, push the rear side of the switch.

When you close the doors after you set the door locks, the doors remain locked.

NOTE

Make sure that you do not leave the key inside the vehicle before locking the doors from the outside using the power door locking switches.

■ Key lock-in prevention function

This function prevents the doors from being locked with the key still in the ignition switch.

▼ Behavior with key lock-in prevention function operative

With the driver's door open, the doors are automatically kept unlocked even if the door locking switch is pushed to the " " position.

▼ Behavior with key lock-in prevention function non-operative

- If the lock lever is turned to the rear ("LOCK") position with the driver's door open and the driver's door is then closed with the lock lever in that position, the driver's door is locked.
- If the spare key is used to lock the driver's door from the outside of the vehicle, the door is locked.

NOTE

When leaving the vehicle, make sure you are holding the key before locking the doors.

Remote keyless entry system

Two transmitters are provided for your vehicle.

The remote keyless entry system has the following functions.
- Locking and unlocking the doors and rear gate without a key
- Sounding a panic alarm
- Arming and disarming the alarm system (if your vehicle is equipped with an optional alarm system). See the next section "Alarm system" for detailed information.

This device complies with Part 15 of the FCC Rules and with RSS-210 of Industry Canada. Operation is subject to the following two conditions: (1) This device may not cause harmful interference, and (2) this device must accept any interference received, including interference that may cause undesired operation.
Changes or modifications not expressly approved by the party responsible for compliance could void the user's authority to operate the equipment.

The operable distance of the keyless entry system is approximately 30 feet (10 meters). However, this distance will vary

depending on environmental conditions. The system's operable distance will be shorter in areas near a facility or electronic equipment emitting strong radio waves such as a power plant, broadcast station, TV tower, or remote controller of home electronic appliances.

The keyless entry system does not operate when the key is inserted in the ignition switch to prevent accidental lockout.

CAUTION

- **Do not expose the transmitter to severe shocks, such as those experienced as a result of dropping or throwing.**
- **Do not take the transmitter apart except when replacing the battery.**
- **Do not get the transmitter wet. If it gets wet, wipe it dry with a cloth immediately.**

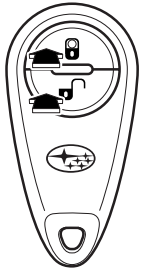

200808

: LOCK/ARM button
Press to Lock all doors.
Press and Hold to activate panic alarm.
Press three times in a five-second period to use vehicle finder function.

: UNLOCK/DISARM button
1) Press once to Unlock driver's door.
2) Press a second time to Unlock all other doors and rear gate.

■ Locking the doors

Briefly press the " " button (for less than two seconds) to lock all doors and rear gate. An electronic chirp will sound once and the turn signal lights will flash once.

If any of the doors or the rear gate is not fully closed, an electronic chirp will sound five times and the turn signal lights will flash five times to alert you that the doors or the rear gate are not properly closed. When you close the door, it will automatically lock.

NOTE

If the " " button is pressed for two seconds or longer, the panic alarm will sound. When locking the doors in normal circumstances, press the " " button for less than two seconds. For details on the panic alarm, refer to "Sounding a panic alarm".

■ Unlocking the doors

Briefly press the " " button (for less than two seconds) to unlock the driver's door. An electronic chirp will sound twice and the turn signal lights will flash twice. To unlock all other doors and the rear gate, briefly press the " " button a second time within 5 seconds.

NOTE

If the interval between the first and second presses of the " " button (for unlocking of all of the doors and the rear gate) is extremely short, the system may not respond.

– CONTINUED –

■ Illuminated entry

The interior (dome and cargo area) light will illuminate when the " 🔓 " button is pressed. This light stay illuminated for approximately 30 seconds if any of the doors or the rear gate is not opened.
If the " 🔒 " button is pressed before 30 seconds have elapsed, this light will go out.
To activate this function, set the following interior light switches to the indicated positions:
Dome light: **Middle** position
Cargo area light: **DOOR** position

■ Vehicle finder function

Use this function to find your vehicle parked among many vehicles in a large parking lot. Provided you are within 30 feet (10 meters) of the vehicle, pressing the " 🔒 " button three times in a five-second period will cause your vehicle's horn to sound once and its turn signal lights to flash three times.

NOTE

If the interval between presses is too short when you press the " 🔒 " button three times, the system may not respond to the signals from the remote transmitter.

■ Sounding a panic alarm

To activate the alarm, keep the " 🔒 " button pressed **for more than two seconds**. The horn will sound and the turn signal lights will flash.
To deactivate it, press any button on the remote transmitter. Unless a button on the remote is pressed, the alarm will be deactivated after approximately 30 seconds.

■ Selecting audible signal operation

Using an electronic chirp, the system will give you an audible signal when the doors lock and unlock. If desired, you may turn the audible signal off.
Do the following to deactivate the audible signal. You can also use the same steps to restore the function.
1. Sit in the driver's seat and shut all doors and the rear gate.
2. Open the driver's door, then remove the key from the ignition switch.
3. Hold down the "UNLOCK" side of the power door locking switch.
4. While holding down the "UNLOCK" side of the power door locking switch, insert the key into the ignition switch and remove it again at least 6 times within 10 seconds after Step 3.
5. While still holding down the "UNLOCK" side of the power door locking switch, close the driver's door once within 10 seconds after Step 4.
6. The turn signal lights flashes 3 times to indicate completion of the setting.

NOTE

If you do not close the driver's door within 10 seconds after Step 4, a flash of the turn signal lights will signal timeout. If this happens, repeat the whole procedure from Step 1.

You may have the above settings done by your SUBARU dealer.

■ Replacing the battery

When the transmitter battery begins to get weak, transmitter range will begin to decrease. Replace the battery as soon as possible.

To replace the battery:

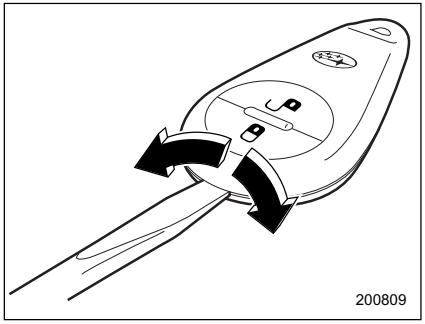

1. Open the transmitter case using a flat-head screwdriver.

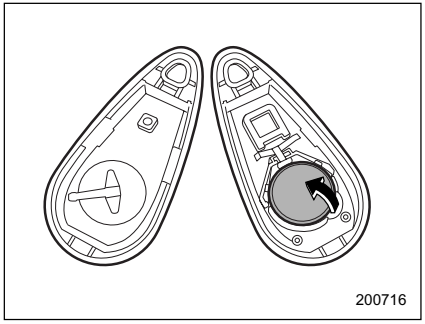

2. Separate the case.
3. Remove the old battery from the holder.

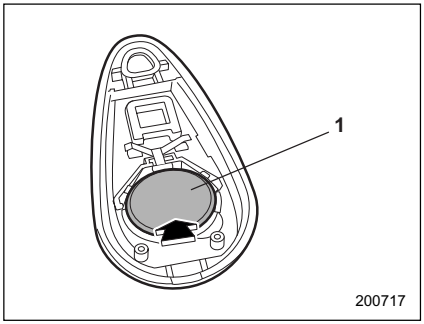

1) Negative (–) side facing up

4. Replace with a new battery (Type CR2025 or equivalent) making sure to install the new battery with the negative (–) side facing up.
5. Reinstall the back half of the transmitter case by snapping it back on.

After the battery is replaced, the transmitter must be synchronized with the keyless entry system's control unit. Press either the " 🔒 " or " 🔓 " button *six times* to synchronize the unit.

⚠ CAUTION

- **Do not let dust, oil or water get on or in the transmitter when replacing the battery.**
- **Be careful not to damage the printed circuit board in the transmitter when replacing the battery.**

■ Replacing lost transmitters

If you lose a transmitter or want to purchase additional transmitters (up to four can be programmed), you should re-program all of your transmitters for security reasons. It is recommended that you have your dealer program all of your transmitters into your system.

▼ Programming the transmitters

The keyless entry system is equipped with a special code learning feature that allows you to program new transmitter codes into the system or to delete old ones. The system can learn up to four unique transmitter codes. The four transmitter codes may be the same or different.

– CONTINUED –

Programming transmitter codes into system:

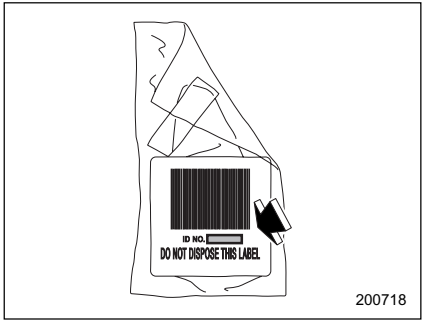

Bag containing transmitter

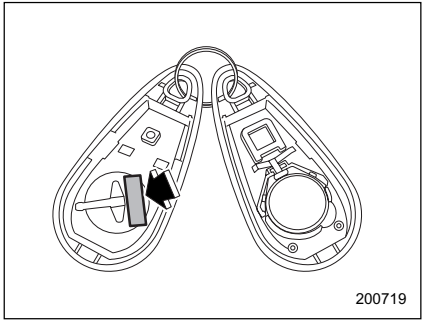

Transmitter circuit board

To register a new transmitter with the keyless entry system, it is necessary to program the transmitter's code (identification number) into the system. A label showing the code is affixed to the bag containing the transmitter, and another is affixed to the circuit board inside the transmitter. If there is no bag, open the transmitter case and make a note of the eight-digit number. Program the number into the system in accordance with the following procedure:

1. Firmly close the doors and the rear gate.
2. Open the driver's door, sit on the driver's seat, and close the door.
3. Perform the following steps within 45 seconds.

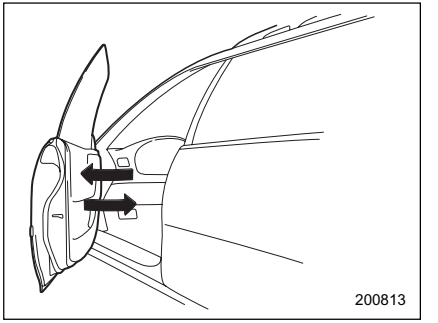

1) Open and close the driver's door once.

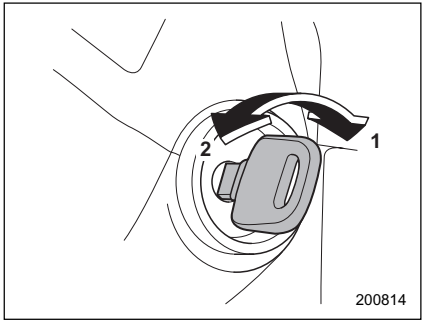

1) ON
2) LOCK

2) Insert the key into the ignition switch, then turn it from the "LOCK" position to the "ON" position 10 times within 15 seconds.

NOTE

- **When you complete step 2), an electronic tone will sound once.**
- **If you do not perform steps 1) and 2) within 45 seconds, an error will occur. An electronic tone will not sound. In this event, perform the whole procedure again beginning with part 1.**

4. Open and close the door once within 15 seconds.

NOTE

• When part 4 of the procedure is completed, an electronic tone will sound for 30 seconds.

• If you do not perform the operations in part 4 within 15 seconds, an error will occur and the electronic tone will not sound. In this event, perform the registration steps again beginning with part 3 of the procedure.

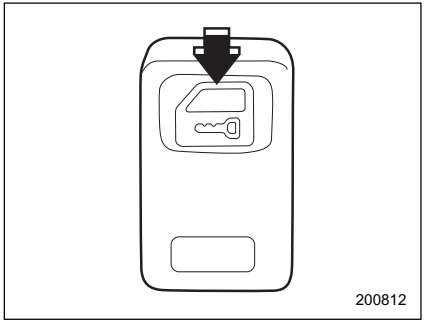

5. Before the electronic tone stops sounding, push the lock side of the power door lock switch the same number of times as the leftmost digit of the transmitter code. For example, push the lock switch eight times if the leftmost digit of the code is 8.

NOTE

• The electronic tone will stop sounding when you start entering the number.

• If you do not start entering the number using the lock switch before the electronic tone stops sounding, an error will occur. In this event, perform the registration steps again beginning with part 3 of the procedure.

• If the interval between one push of the switch and the next exceeds five seconds, an error will occur. In this event, perform the procedure again beginning with part 4. If an error occurs six times, perform the procedure again starting with part 3.

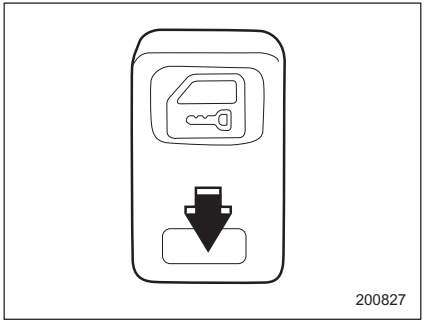

6. When you have finished entering the number, push the unlock side of the lock switch within five seconds.

NOTE

• An electronic tone will sound.

• If you push the unlock side of the lock switch when more than five seconds have passed, an error will occur. In this event, perform the procedure again beginning with part 4. If an error occurs six times, perform the procedure again starting with part 3.

7. Perform parts 5 and 6 of the procedure for each of the remaining digits of the transmitter code beginning with the second digit (counting from the left) and finishing with the eighth digit.

NOTE

• When you finish entering the eighth digit, an electronic tone will sound for 30 seconds.

• If the interval between one push of the switch and the next exceeds five seconds, an error will occur. In this event, perform the procedure again beginning with part 4. If an error occurs six times, perform the procedure again starting with part 3.

8. Before the electronic tone stops sounding, use the power door lock switch to again enter the transmitter code beginning

– CONTINUED –

with the leftmost digit.

NOTE

If you do not start entering the number using the lock switch before the electronic tone stops sounding, an error will occur. In this event, perform the procedure again beginning with part 3.

9. When you have finished entering the code a second time, an electronic tone will sound for one second to indicate completion of registration, provided the code entered the second time is identical to that entered the first time.

NOTE

If the code entered the second time is not identical to the code entered the first time, an error will occur. In this event, perform the procedure again beginning with part 5. If an error occurs five times, perform the procedure again starting with part 3.

10.If you wish to program another transmitter code into the system (up to four transmitter codes can be programmed into the system), perform the procedure beginning with part 4. When you have finished programming all of the necessary transmitter codes into the system, remove the key from the ignition switch.
11.Test every registered transmitter to confirm correct operation.

▼ Deleting old transmitter codes

The control unit of the keyless entry system has four memory locations to store transmitter codes, giving it the ability to operate with up to four transmitters. When you lose a transmitter, the lost transmitter's code remains in the memory. For security reasons, lost transmitter codes should be deleted from the memory.
To delete old transmitter codes, program four transmitter codes into the system. If you have only one current transmitter, program it four times. If you have two current transmitters, program each one twice. If you have three current transmitters, program two of them once and the third one twice. This process will leave only current transmitter codes in the system's memory.

NOTE

Make sure no one else is operating their keyless entry system within range of your vehicle when programming transmitters. If someone else were to operate their remote transmitter while you are programming your transmitters, it is possible that their transmitter code will be programmed into your system, allowing them unauthorized access to your vehicle.

Alarm system

The alarm system helps to protect your vehicle and valuables from theft. The horn sounds and the turn signal lights flash if someone attempts to break into your vehicle. The starter motor is also interrupted to prevent starting the vehicle without a key.

The system can be armed and disarmed with the remote transmitter.
The system does not operate when the key is inserted into the ignition switch.

Your vehicle's alarm system has been set for activation at the time of shipment from the factory. You can set the system for deactivation yourself or have it done by your SUBARU dealer.

■ System operation

The alarm system will give the following alarm when triggered:
- The vehicle's horn will sound and the turn signal lights will flash for 30 seconds.
- If any door or the rear gate remains open after the 30-second period, the horn will continue to sound for a maximum of 3 minutes. If the door and the rear gate are closed while the horn is sounding, the horn will stop sounding with a delay of up to 30 seconds.

The alarm is triggered by:
- Opening a door or the rear gate.
- Physical impact to the vehicle, such as forced entry (only vehicles with shock sensors (dealer option))

■ Activating and deactivating the alarm system

To change the setting of your vehicle's alarm system for activation or deactivation, do the following.
1. Disarm the alarm system (see "Disarming the system" in this section).
2. Sit in the driver's seat and shut all doors and the rear gate.
3. Turn the ignition switch to the "ON" position.
4. Hold down the UNLOCK side of the driver's power door locking switch, open the driver's door within the following 1 second, and wait 10 seconds without releasing the switch. The setting will then be changed as follows:

If the system was previously activated:
The horn sounds twice, indicating that the system is now deactivated.

If the system was previously deactivated:
The horn sounds once, indicating that the system is now activated.

NOTE

You may have the above setting change done by your SUBARU dealer.

■ If you have accidentally triggered the alarm system

▼ To stop the alarm

Do any of the following operations:
- Press any button on the remote transmitter.
- Cycle the ignition switch from the "LOCK" to "ON" position three times within 5 seconds.

■ Arming the system

▼ To arm the system using remote transmitter

1. Close all windows and the moonroof (if so equipped).
2. Remove the key from the ignition switch.
3. Open the doors and get out of the vehicle.
4. Make sure that the engine hood is locked.
5. Close all doors and the rear gate.

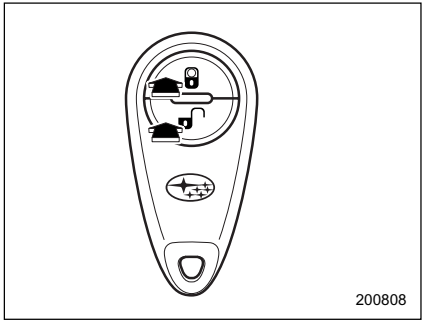

: Press to Arm the system.
: Press to Disarm the system.

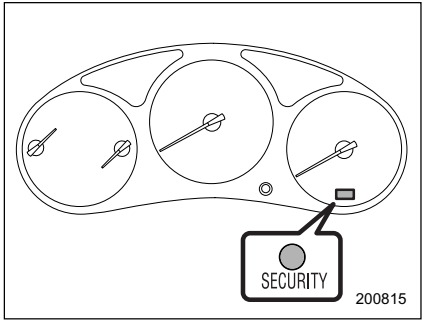

Security indicator light

6. Briefly press the " " button (for less

– CONTINUED –

than two seconds). All doors and the rear gate will lock, an electric chirp will sound once, the turn signal lights will flash once, and the indicator lights will start flashing rapidly. After rapid flashing for 30 seconds (standby time), the indicator lights will then flash slowly (twice approximately every two seconds), indicating that the system has been armed for surveillance.

If any of the doors or the rear gate is not fully closed, an electronic chirp sounds five times, the turn signal lights flash five times to alert you that the doors or the rear gate are not properly closed. When you close the door, the system will automatically arm and doors will automatically lock.

▼ To arm the system using power door locking switches

1. Close all windows.
2. Remove the key from the ignition switch.
3. Open the doors and get out of the vehicle.
4. Make sure that the engine hood is locked.
5. Close the doors and the rear gate but leave only the driver's door or the front passenger's door open.

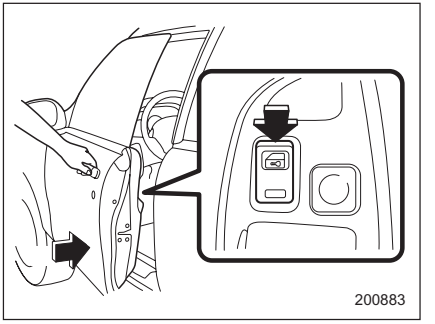

6. Push the front side ("LOCK" side) of the power door locking switch to set the door locks.
7. Close the door. An electronic chirp will sound once, the turn signal lights will flash once, and the indicator lights will start flashing rapidly. After rapid flashing for 30 seconds (standby time), the indicator lights will then flash slowly (twice approximately every two seconds), indicating that the system has been armed for surveillance.

NOTE

- **The system can be armed even if the engine hood, the windows and/or moonroofs are opened. Always make sure that they are fully closed before arming the system.**
- **The 30-second standby time can be eliminated if you prefer. Have it performed by your SUBARU dealer.**
- **The system is in the standby mode for a 30-second period after locking the doors with the remote transmitter. The security indicator light will flash at short intervals during this period.**
- **If any of the following actions is done during the standby period, the system will not switch to the surveillance state.**
  - **Doors are unlocked using the remote transmitter.**
  - **Any door or the rear gate is opened.**
  - **Ignition switch is turned to the "ON" position.**
- **The engine does not start even when the ignition switch is turned to the "START" position once the alarm system has been triggered.**

■ Disarming the system

Briefly press the " 🔓 " button (for less than two seconds) on the remote transmitter. The driver's door will unlock, an electronic chirp will sound twice, the turn signal lights will flash twice and the indicator light will go off.

NOTE (Models with immobilizer)

If your vehicle is equipped with an immobilizer, the immobilizer's function will cause the security indicator light to flash (approximately once every three seconds) even after the system is disarmed.

NOTE

The system can be disarmed by the following method, too.

• Cycle the ignition switch from the "LOCK" to the "ON" position three times within 5 seconds.

▼ Emergency disarming

If you cannot disarm the system using the transmitter (i.e. the transmitter is lost, broken or the transmitter battery is too weak), you can disarm the system without using the transmitter.

1. Unlock the door with the key and then open the door.
2. Insert the key into the ignition switch and cycle it from the "LOCK" to the "ON" position three times **within 5 seconds**.

■ Valet mode

When you choose the valet mode, the security system does not operate. In valet mode, the remote transmitter is used only for locking and unlocking the doors and rear gate and panic activation.

To enter the valet mode, change the setting of your vehicle's alarm system for deactivation mode. (Refer to "Activating and deactivating the alarm system" in this section.) The security indicator light will continue to flash once every three seconds indicating that the system is in the valet mode (only vehicle with an immobilizer).

To exit valet mode, change the setting of your vehicle's alarm system for activation mode. (Refer to "Activating and deactivating the alarm system" in this section.)

NOTE

If your vehicle is not equipped with an immobilizer, the security indicator light does not flash during the valet mode.

■ Passive arming

When passive arming mode has been programmed by the dealer, arming of the system is automatically accomplished without using the remote transmitter. Note that in this mode, DOORS MUST BE MANUALLY LOCKED.

▼ To enter the passive mode

If you wish to program the passive arming mode, have it done by your SUBARU dealer.

▼ Arming the system

1. Turn the ignition switch to the "ON" position.

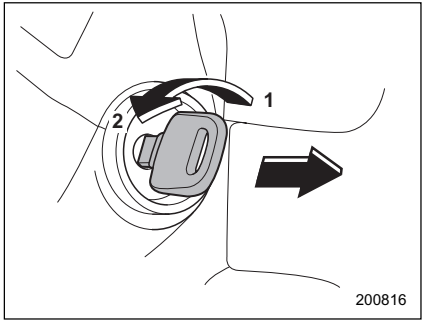

1) ON
2) LOCK

2. Turn the ignition switch from "ON" to "LOCK" position and remove the key from the ignition switch.

– CONTINUED –

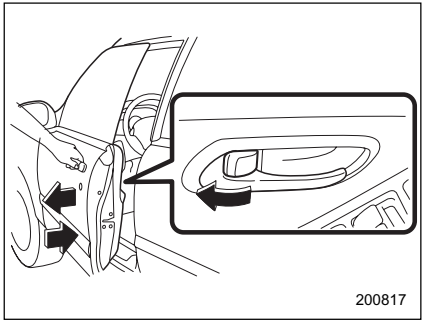

3. Open the doors and get out of the vehicle.
4. Before closing the doors, lock all doors with the inside door lock levers.
5. Close the doors. The system will automatically arm after one minute.

In the passive mode, the system can also be armed with the remote transmitter or with the power door locking switches. If the remote transmitter or power door locking switch is used to lock the vehicle, arming will take place immediately regardless of whether or not the passive mode has been selected.

⚠ CAUTION

In passive mode, the system will automatically activate the alarm but WILL NOT automatically lock the doors. In order to lock the doors you must either lock them as indicated in step 4 above or with the key once they have been closed. Failure to lock the doors manually will result in a higher security risk.

▼ Disarming the system

To disarm the system, briefly press the " 🔓 " button on the transmitter.

■ Tripped sensor identification

The security indicator light flashes when the alarm system has been triggered. Also, the number of flashes indicates the location of unauthorized intrusion or the severity of impact on the vehicle.

- When the ignition switch is turned to the "ON" position, the indicator light will light for 1 second and then flash as follows:
  When a door or rear gate was opened: 5 times
  When the ignition switch was turned to the "ON" position: 3 times
  When a strong impact or multiple impacts were sensed: twice (only vehicles with shock sensors (dealer option))
  When a light impact was sensed: once (only vehicles with shock sensors (dealer option))

NOTE

Any of the above indicator light flashings will recur each time the ignition switch is turned to the "ON" position. Rearming the alarm system cancels the flashing.

■ Shock sensors (dealer option)

The shock sensors trigger the alarm system when they sense impacts applied to the vehicle and when any of their electric wires is cut. The alarm system causes the horn to sound and the turn signal lights to flash for a short time when the sensed impact is weak, but it warns of a strong impact or multiple impacts by sounding the horn and flashing the turn signal lights, both lasting approximately 30 seconds.
If you desire, your SUBARU dealer can connect them and set them for activation or deactivation.

NOTE

- **The shock sensors are not always able to sense impacts caused by breaking in, and cannot sense an im-**

pact that does not cause vibration (such as breaking the glass using a rescue hammer).

• The shock sensors may sense vibration like those shown below and trigger the alarm system. Select the settings of the alarm system and shock sensors appropriately depending on where you usually park your vehicle.

Example:

Vibration from a construction site

Vibration in a multistory parking garage

Vibration from trains

• You can have the sensitivity of the shock sensors adjusted to your preference by your SUBARU dealer.

Child safety locks

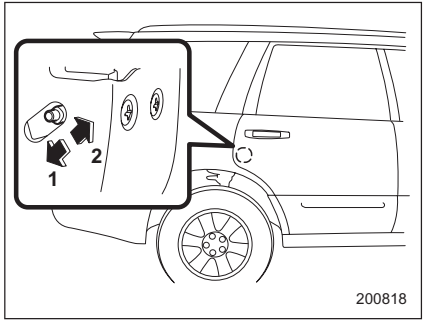

1) Lock
2) Unlock

Each rear door has a child safety lock that prevents the doors from being opened even if the inside door handle is pulled.

When the child safety lock lever is in the lock position, the door cannot be opened from inside regardless of the position of the inner door handle lock lever. The door can only be opened from the outside.

⚠ WARNING

Always use the child safety lock whenever a child rides in the rear seat. Serious injury could result if a child accidentally opened the door and fell out.

Windows

■ Power windows

⚠ WARNING

To avoid serious personal injury caused by entrapment, you must do the following.

- **When operating the power windows, be extremely careful to prevent anyone's fingers, arms, neck or head from being caught in the window.**
- **Always lock the passengers' windows using the lock switch when children are riding in the vehicle.**
- **Before leaving the vehicle, always remove the key from the ignition switch for safety and never allow an unattended child to remain in the vehicle. Failure to follow this procedure could result in injury to a child operating the power window.**

The power windows operate only when the ignition switch is in the "ON" position.

▼ Driver's side switches

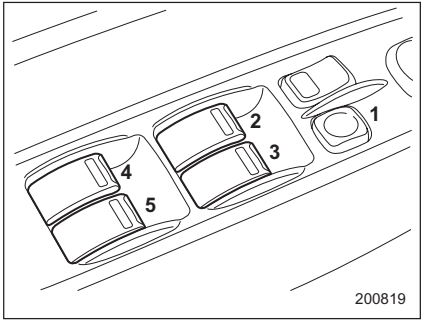

1) Lock switch
2) For driver's window (with one-touch auto down feature)
3) For front passenger's window
4) For rear left window
5) For rear right window

All door windows can be controlled by the power window switch cluster at the driver side door.

▽ Operating the driver's window

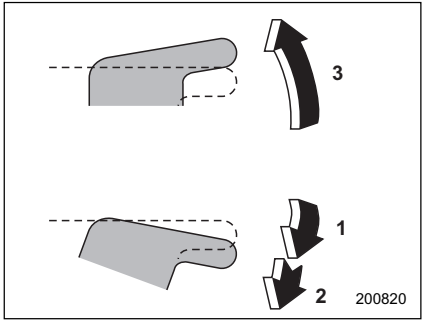

1) Open
2) Automatically open
3) Close

To open:
Push the switch down lightly and hold it. The window will open as long as the switch is held.
This switch also has a one-touch auto down feature that allows the window to be opened fully without holding the switch.
Push the switch down until it clicks and release it, and the window will fully open. To stop the window halfway, pull the switch up lightly.

To close:
Pull the switch up lightly and hold it. The window will close as long as the switch is

held.

▽ **Operating the passengers' windows**

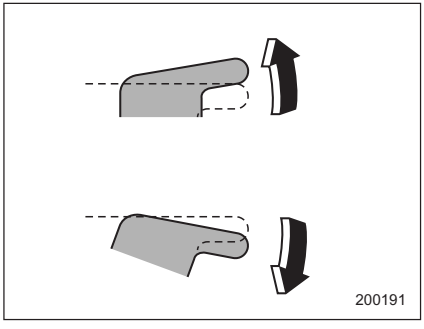

To open the passengers' windows, push the appropriate switch down and hold it until the window reaches the desired position.
To close the window, pull the switch up and hold it until it reaches the desired position.

▽ **Locking the passengers' windows**

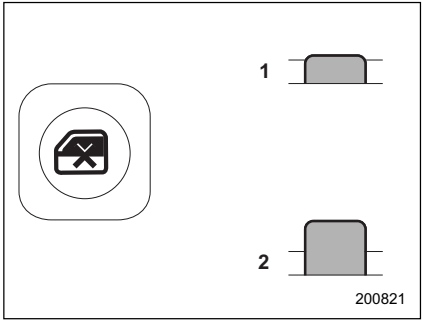

1) Lock
2) Unlock

To lock the passengers' windows, push the lock switch. When the lock switch is in the "LOCK" position, the passengers' windows cannot be opened or closed.
Press the switch again to cancel the passengers' window locking.

▼ **Passengers' side switches**

To open the window, push the switch down and hold it until the window reaches the desired position.
To close the window, pull the switch up and hold it until the window reaches the desired position.

When the lock switch on the power window switch cluster, located on the driver's side door, is in the "LOCK" position, the passengers' windows cannot be operated with the passengers' switches.

Rear gate

The rear gate can be locked and unlocked using either the keyless entry system or the power door locking switches.
Refer to the “Power door locking switches” and “Remote keyless entry system” sections in this chapter.

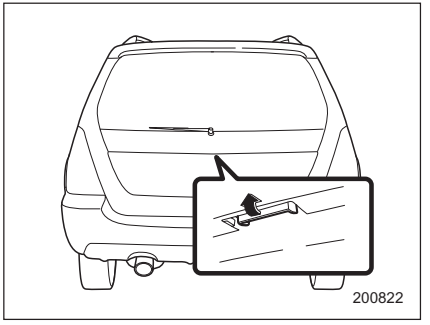

To open the rear gate, first unlock the rear gate lock then pull the outside handle up. Then, hold the rear gate and raise it as high as it will go.

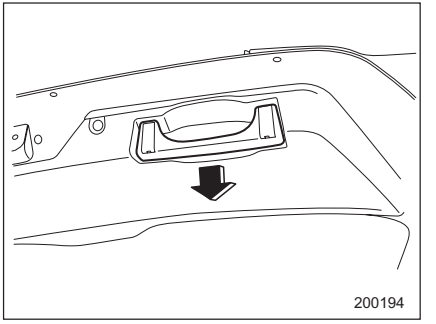

To close the rear gate, lower it slowly and push down firmly until the latch engages. The rear gate can be lowered easily if you pull down holding the recessed grip.

WARNING

- **Do not attempt to shut the rear gate while holding the inside handle. Also avoid closing the rear gate by pulling on the inside handle from inside the cargo space. There is a danger of your hand being caught and injured.**
- **To prevent dangerous exhaust gas from entering the vehicle, always keep the rear gate closed while driving.**

CAUTION

- **Do not jam a plastic bag in or place cellophane tape on the rear gate stays or scratch the stays while loading or unloading cargo. That could cause leakage of gas from the stays, which may result in their inability to hold the rear gate open.**
- **Be careful not to hit your head or face on the rear gate when opening or closing the rear gate and when loading or unloading cargo.**

NOTE

If the rear gate cannot be unlocked due to a discharged battery, a fault in the door locking/unlocking system or other causes, you can unlock it by manually operating the rear gate lock release lever.
For the procedure, refer to “Rear gate – if the rear gate cannot be unlocked” in chapter 9 “In case of emergency”.

Moonroof (if equipped)

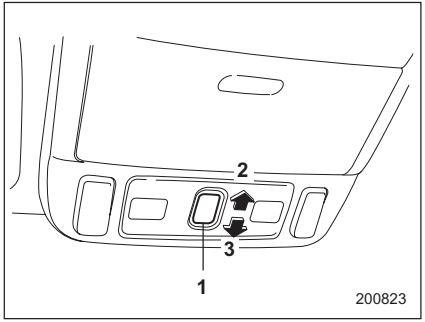

1) Open/close switch
2) Open
3) Close

The moonroof operates only when the ignition switch is in the “ON” position.

■ To open the moonroof

Push and quickly release the rear part of the switch to open the moonroof. The sun shade will also be opened together with the moonroof. The moonroof will stop at a position 20 in (50 cm) away from the fully closed position. Push the switch again to open the moonroof completely.
To stop the moonroof at a desired position, simply push the opposite side of the switch.

After washing the vehicle or after it rains, wipe away water on the roof prior to opening the moonroof to prevent drops of water from falling into the passenger compartment.

■ To close the moonroof

Push and quickly release the front part of the switch to close the moonroof. The moonroof will stop at a position 8 in (20 cm) away from the fully closed position. Push the switch again to close the moonroof completely.
To stop the moonroof at a desired position, simply push the opposite side of the switch.

■ Anti-entrapment function

When the moonroof senses an object trapped between its glass and the vehicle’s roof during closure, it automatically moves back by 6 in (15 cm) from that point and then stops. The anti-entrapment function may also be activated by a strong shock on the moonroof even when there is nothing trapped.

NOTE

• For the sake of safety, it is recommended that you avoid driving with the moonroof fully opened.
• Driving with the moonroof fully open can cause an annoying sound to generate at high speeds. If such a condition has been encountered, use the moonroof at the initial stop position of 20 in (50 cm).
• If the moonroof cannot be closed through switch operation because of system failure, it can be closed manually using a hex-head wrench. For the procedure, refer to “Moonroof – if the moonroof cannot be closed” in Chapter 9 “In case of emergency”.

▼ Sun shade

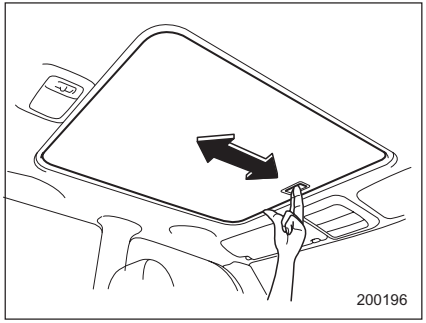

The sun shade can be slid forward or backward by hand while the moonroof is closed.

– CONTINUED –

If the moonroof is opened, the sun shade also moves back.

WARNING

- **Never let anyone's hands, arms, head or any objects protrude from the moonroof. A person could be seriously injured if the vehicle stops suddenly or turns sharply or if the vehicle is involved in an accident.**

  To avoid serious personal injury caused by entrapment, you must do the following.
- **Before closing the moonroof, make sure that no one's hands, arms, head or other objects will be accidentally caught in the moonroof.**
- **Before leaving the vehicle, always remove the key from the ignition switch for safety and never allow an unattended child to remain in the vehicle. Failure to follow this procedure could result in injury to a child operating the moonroof.**
- **Never try to check the anti-entrapment function by deliberately placing part of your body in the moonroof.**

CAUTION

- **Do not sit on the edge of the open moonroof.**
- **Do not operate the moonroof if falling snow or extremely cold conditions have caused it to freeze shut.**

Ignition switch 3-3
LOCK 3-3
ACC 3-4
ON 3-4
START 3-4
Key reminder chime 3-5
Ignition switch light (if equipped) 3-5
Key interlock release (AT vehicles only) 3-5
Hazard warning flasher 3-6
Meters and gauges 3-6
Speedometer 3-6
Odometer/Trip meter 3-6
Tachometer 3-7
Fuel gauge 3-7
Temperature gauge 3-8
Outside temperature indicator 3-8
Warning and indicator lights 3-9
Seatbelt warning light and chime 3-9
SRS airbag system warning light 3-10
Front passenger's frontal airbag ON and OFF indicators 3-10
CHECK ENGINE warning light/Malfunction indicator lamp 3-11
Charge warning light 3-12
Oil pressure warning light 3-12
AT OIL TEMPerature warning light (ATvehicles) 3-12
ABS warning light 3-12
Vehicle Dynamics Control warning light (if equipped)/Vehicle Dynamics Control OFF indicator light (if equipped) 3-13
Brake system warning light 3-14
Door open warning lights 3-15
Low fuel warning light..... 3-15
All-Wheel Drive warning light (AT vehicles) 3-15
Vehicle Dynamics Control operation indicator light (if equipped) 3-16
Shift position indicator (AT vehicles) 3-16
Turn signal indicator lights 3-16
High beam indicator light 3-16
Cruise control indicator light 3-16
Cruise control set indicator light 3-17
Clock 3-17
Light control switch 3-18
Headlights 3-18
High/low beam change (dimmer) 3-18
Headlight flasher 3-19
Daytime running light system 3-19
Turn signal lever 3-20
Illumination brightness control 3-20
Headlight beam leveler (Canada-spec. 2.5XT) 3-21
Parking light switch 3-21
Front fog light button 3-21
Wiper and washer 3-22
Windshield wiper and washer switches 3-23

Rear window wiper and washer switch 3-24
Windshield wiper deicer (if equipped) 3-25
Rear window defogger button 3-25
Mirrors 3-26
Inside mirror 3-26
Outside mirrors 3-28
Tilt steering wheel 3-29
Horn 3-30

Ignition switch

⚠ WARNING

- **Never turn the ignition switch to "LOCK" while the vehicle is being driven or towed because that will lock the steering wheel, preventing steering control. And when the engine is turned off, it takes a much greater effort than usual to steer.**
- **Before leaving the vehicle, always remove the key from the ignition switch for safety and never allow an unattended child to remain in the vehicle. Failure to follow this procedure could result in injury to a child or others. Children could operate the power windows, the sunroof or other controls or even make the vehicle move.**

The ignition switch has four positions: LOCK, ACC, ON and START.

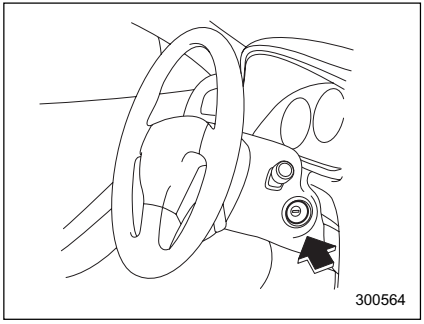

NOTE

- **Keep the ignition switch in the "LOCK" position when the engine is not running.**
- **Using electrical accessories for a long time with the ignition switch in the "ON" or "ACC" position can cause the battery to go dead.**

If the ignition switch will not move from the "LOCK" position to the "ACC" position, turn the steering wheel slightly to the left and right as you turn the ignition switch.

- **If the key is attached to a keyholder or to a large bunch of other keys, centrifugal force may act on it as the vehicle moves, resulting in unwanted turning of the ignition switch. Also, if a large keyholder is attached to the key, your knees or hands may accidentally touch it in a way that turns the ignition switch.**

■ LOCK

The key can only be inserted or removed in this position. The ignition switch will lock the steering wheel when you remove the key.

If turning the key is difficult, turn the steering wheel slightly to the right and left as you turn the key.

▼ Automatic transmission vehicles

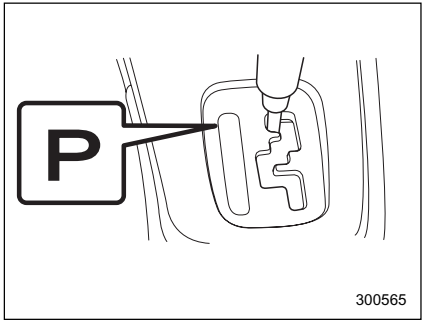

– CONTINUED –

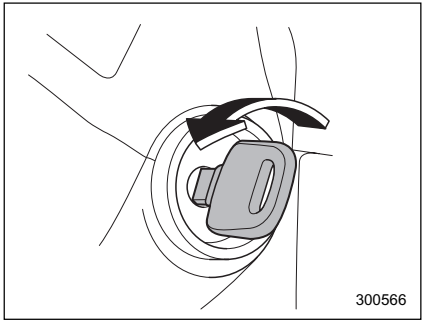

The key can be turned from “ACC” to “LOCK” only when the selector lever is in the “P” position.

▼ **Manual transmission vehicles**

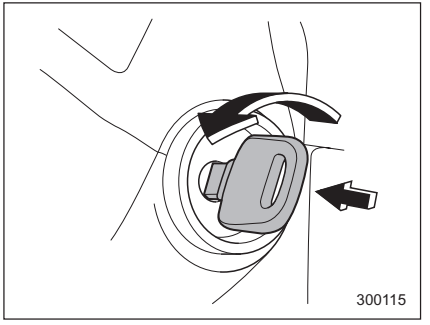

The key can be turned from “ACC” to “LOCK” only when the key is pushed in while turning it.

■ ACC

In this position the electrical accessories (radio, accessory power outlet, etc.) can be used.

■ ON

This is the normal operating position after the engine is started.

■ START

The engine is started in this position. The starter cranks the engine to start it. When the key is released (after the engine has started), the key automatically returns to the “ON” position.

⚠ CAUTION

Do not turn the ignition switch to the “START” position while the engine is running.

▼ **For models with immobilizer**

If you fail to start your engine with your registered key, once pull out the key (at this time, the security indicator light blinks), and then insert the key in the ignition switch and turn it to the “START” position and again try to start your engine.

NOTE

The engine may not start in the following cases:

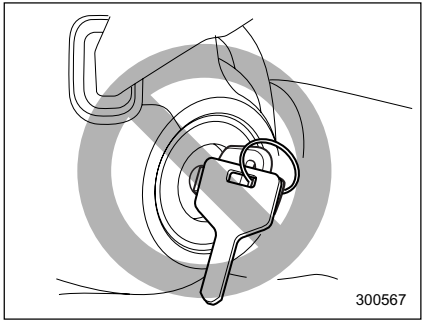

- **The key grip is touching another key or a metallic key holder.**

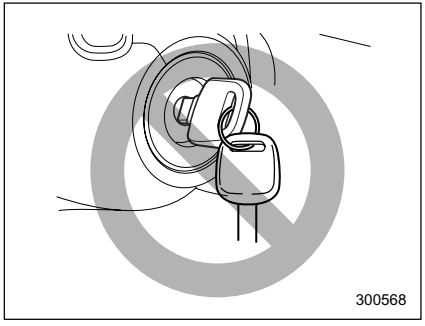

- **The key is near another key that contains an immobilizer transponder.**

■ Key reminder chime

The reminder chime sounds when the driver's door opens and the key is in the "LOCK" or "ACC" positions. The chime stops when the key is removed from the ignition switch.

NOTE

The ignition switch light flashes when the reminder chime sounds.

■ Ignition switch light (if equipped)

For easy access to the ignition switch in the dark, the ignition switch light comes on when the driver's door is opened. After closing the door, the light remains lit for 5 seconds and then dims before it goes out. The light flashes if you insert the key into the ignition switch with the driver's door open.

■ Key interlock release (AT vehicles only)

If the key can not be turned to the "LOCK" position even when the selector lever is in the "P" position:

1. Take out the screwdriver.

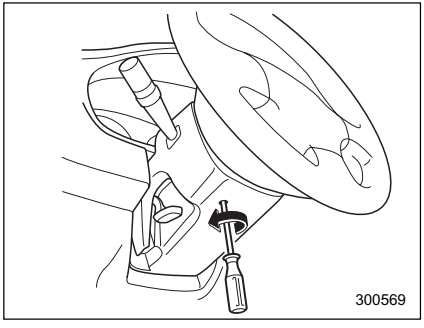

2. Remove the cover under the steering column using a Phillips screwdriver.

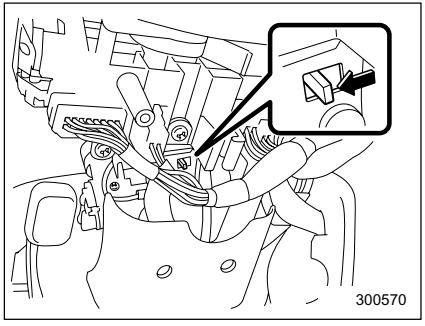

3. Turn the ignition key while pressing the key interlock release lever.

Take your vehicle to the nearest SUBARU dealer immediately to have the key interlock system repaired.

Hazard warning flasher

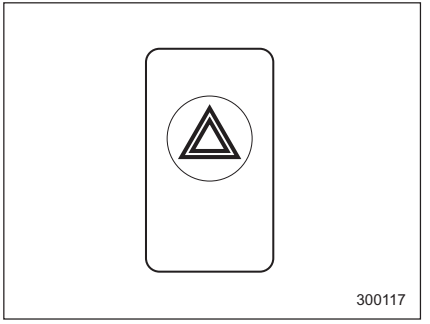

The hazard warning flasher is used to warn other drivers when you have to park your vehicle under emergency conditions. The hazard warning flasher works with the ignition switch in any position.

To turn on the hazard warning flasher, push the hazard warning button on the instrument panel. To turn off the flasher, push the button again.

NOTE

When the hazard warning flasher is on, the turn signals do not work.

Meters and gauges

■ Speedometer

The speedometer shows the vehicle speed.

■ Odometer/Trip meter

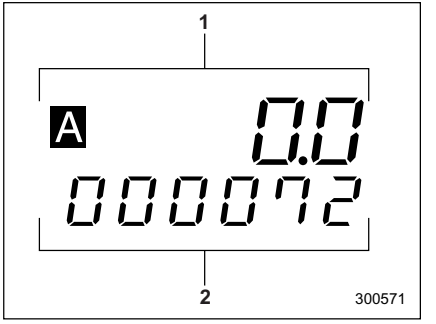

1) Trip meter
2) Odometer

This meter displays the odometer and two trip meters when the ignition switch is in the “ON” position.

NOTE

Even with the ignition switch in the “OFF” or “LOCK” position, the odometer and trip meters are displayed for 10 seconds when you press the knob.

▼ Odometer

The odometer shows the total distance that the vehicle has been driven.

▼ Double trip meter

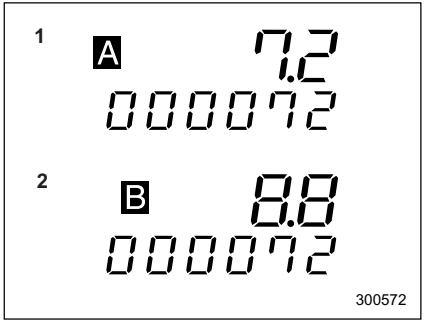

1) A trip meter
2) B trip meter

The trip meter shows the distance that the vehicle has been driven since you last set it to zero.
To change the mode indication, briefly push the knob.
Each press of the knob changes the function alternately.

A trip meter ⟷ B trip meter

To set the trip meter to zero, select the A

trip or B trip meter by pushing the knob and keep the knob pushed for more than 2 seconds.

CAUTION

To ensure safety, do not attempt to change the function of the indicator during driving, as an accident could result.

NOTE

If the connection between the combination meter and battery is broken for any reason such as vehicle maintenance or fuse replacement, the data recorded on the trip meter will be lost.

■ Tachometer

The tachometer shows the engine speed in thousands of revolutions per minute.

CAUTION

Do not operate the engine with the pointer of the tachometer in the red zone. In this range, fuel injection will be cut by the engine control module to protect the engine from overrevving. The engine will resume running normally after the engine speed is reduced below the red zone.

■ Fuel gauge

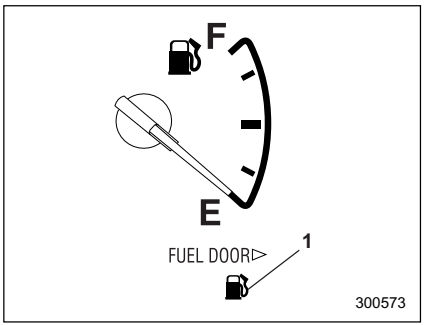

1) Low fuel warning light

The fuel gauge shows the approximate amount of fuel remaining in the tank.
The gauge does not return to “E” even though the ignition switch is in the “ACC” or “LOCK” position.

The gauge may move slightly during braking, turning or acceleration due to fuel level movement in the tank.

NOTE

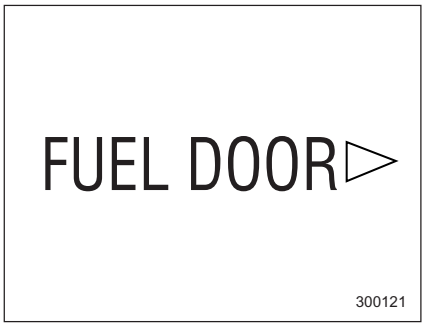

You will see the “FUEL DOOR ▷” sign near the fuel gauge.
This indicates that the fuel filler door (lid) is located on the right side of the vehicle.

▼ Low fuel warning light

The low fuel warning light comes on when the tank is nearly empty [approximately 2.3 US gal (9.0 liters, 1.9 Imp gal)]. It only operates when the ignition switch is in the “ON” position.

– CONTINUED –

NOTE

This light does not go out unless the tank is replenished up to an internal fuel quantity of approximately 4.0 US gal (15 liters, 3.3 Imp gal).

CAUTION

Promptly put fuel in the tank whenever the low fuel warning light comes on. Engine misfires as a result of an empty tank could cause damage to the engine.

■ Temperature gauge

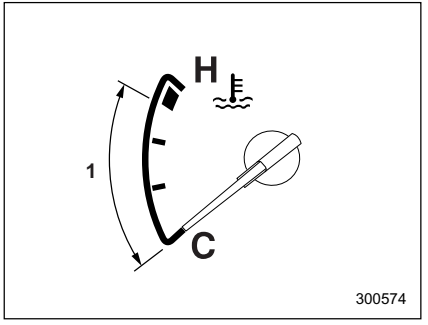

1) Normal operating range

The temperature gauge shows engine coolant temperature when the ignition switch is in the “ON” position.

The coolant temperature will vary in accordance with the outside temperature and driving conditions.

We recommend that you drive moderately until the pointer of the temperature gauge reaches near the middle of the range. Engine operation is optimum with the engine coolant at this temperature range and high revving operation when the engine is not warmed up enough should be avoided.

CAUTION

If the pointer exceeds the normal operating range, safely stop the vehicle as soon as possible.
See “In case of emergency” in chapter 9.

■ Outside temperature indicator

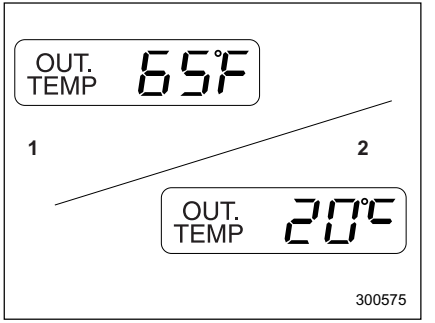

MT vehicles
1) U.S.-spec. models
2) Canada-spec. models

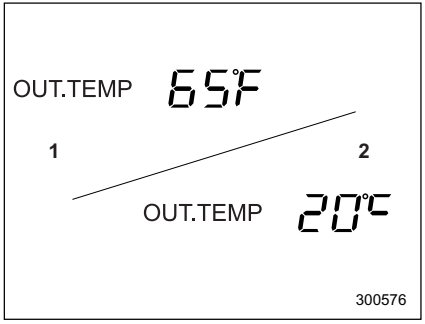

AT vehicles
1) U.S.-spec. models
2) Canada-spec. models

The outside temperature indicator is located below the odometer/trip meter. The indicator can indicate an outside temperature ranging from –22 to 122°F (–30 to 50°C).

The indicator can give a false reading under any of the following conditions:
- When there is too much sun.
- During idling; while running at low speeds in a traffic jam; when the engine is restarted immediately following a shutdown.
- When the actual outside temperature falls outside the specified indicator range.

Warning and indicator lights

Several of the warning and indicator lights come on momentarily and then go out when the ignition switch is initially turned to the “ON” position. This permits checking the operation of the bulbs.
Apply the parking brake and turn the ignition switch to the “ON” position. The following lights come on:

Seatbelt warning light
SRS airbag system warning light
Front passenger’s frontal airbag ON indicator light
Front passenger’s frontal airbag OFF indicator light
CHECK ENGINE warning light/Malfunction indicator lamp
Charge warning light
Oil pressure warning light
AT OIL temperature warning light (AT vehicles)
ABS warning light
Vehicle Dynamics Control warning light (if equipped)/Vehicle Dynamics Control OFF indicator light (if equipped)
Brake system warning light
All-Wheel Drive warning light (AT vehicles)
Vehicle Dynamics Control operation indicator light (if equipped)
Cruise control indicator light (if equipped)
Cruise control set indicator light (if equipped)

If any lights fail to come on, it indicates a burned-out bulb or a malfunction of the corresponding system.
Consult your authorized SUBARU dealer for repair.

■ Seatbelt warning light and chime

Your vehicle is equipped with a seatbelt warning device at the driver’s seat, as required by current safety standards. There is a seatbelt warning light in the combination meter.
If the driver has not yet fastened the seatbelt when the ignition switch is turned to the “ON” position, the seatbelt warning light will flash for 6 seconds, to warn that the seatbelt is unfastened. If the driver’s seatbelt is not fastened, a chime will also sound simultaneously.
If the driver’s seatbelt is still not fastened 6 seconds later, the warning light will remain lit for 15 seconds. If the driver’s seatbelt is still not fastened even 15 seconds later (21 seconds after turning ON the ignition switch), the warning lights will alternate between flashing and steady illumi-

– CONTINUED –

nation at 15-second intervals, and the chime will sound while the warning light is flashing.
Alternate flashing and steady illumination of the warning lights and sounding of the chime will continue until the driver fastens the seatbelt.

NOTE

- **If the driver unfastens the seatbelt after fastening, the seatbelt warning device operates as follows according to the vehicle speed.**
  - **At speeds lower than approximately 9 mph (15 km/h)**
    The warning light will alternate between flashing and steady illumination at 15-second intervals. The chime will not sound.
  - **At speeds higher than approximately 9 mph (15 km/h)**
    The warning light will alternate between flashing and steady illumination at 15-second intervals and the chime will sound while the warning light is flashing.
- **It is possible to cancel the warning operation that follows the 6-second warning after turning ON the ignition switch by unfastening and refastening the driver's seatbelt. When the ignition switch is turned ON next time, however, the complete sequence of warning operation resumes. For further details about canceling the warning operation, please contact your SUBARU dealer.**

■ SRS airbag system warning light

AIR BAG

When the ignition switch is turned to the "ON" position, the SRS airbag system warning light will come on for approximately 6 seconds and go out. This shows the SRS frontal airbag and SRS side airbag and seatbelt pretensioners are in normal operation.

⚠ WARNING

If the warning light exhibits any of the following conditions, there may be a malfunction in the seatbelt pretensioners and/or SRS airbag system. Immediately take your vehicle to your nearest SUBARU dealer to have the system checked. Unless checked and properly repaired, the seatbelt pretensioners and/or SRS airbags will operate improperly (e.g. SRS airbags may inflate in a very minor collision or not inflate in a severe collision), which may increase the risk of injury.

- **Flashing or flickering of the warning light**
- **No illumination of the warning light when the ignition switch is first turned to the "ON" position**
- **Continuous illumination of the warning light**
- **Illumination of the warning light while driving**

■ Front passenger's frontal airbag ON and OFF indicators

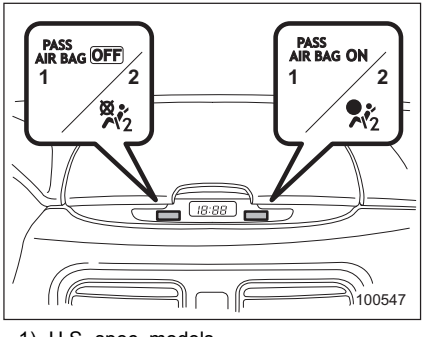

1) U.S.-spec. models
2) Canada-spec. models

PASS AIR BAG ON or : Front passenger's frontal airbag ON indicator
PASS AIR BAG OFF or :Front passenger's frontal airbag OFF indicator

The front passenger's frontal airbag ON and OFF indicators show you the status of the front passenger's SRS frontal airbag. The indicators are located next to the clock in the central portion of the instrument panel.
When the ignition switch is turned to the "ON" position, both the ON and OFF indicators illuminate for 6 seconds during which time the system is checked. Following the system check, both indicators extinguish for 2 seconds. After this, one of the indicators illuminates depending on the status of the front passenger's SRS frontal airbag reached by the Subaru advanced frontal airbag system monitoring.
If the front passenger's SRS frontal airbag is activated, the passenger's frontal airbag ON indicator will illuminate while the OFF indicator will remain extinguished.
If the front passenger's SRS frontal airbag is deactivated, the passenger's frontal airbag ON indicator will remain extinguished while the OFF indicator will illuminate.
With the ignition switch turned to the "ON" position, if both the ON and OFF indicators remain lit or extinguished simultaneously even after the system check period, the system is faulty. Contact your SUBARU dealer immediately for an inspection.

■ CHECK ENGINE warning light/Malfunction indicator lamp

CHECK ENGINE

CAUTION

If the CHECK ENGINE light comes on while you are driving, have your vehicle checked/repaired by your SUBARU dealer as soon as possible. Continued vehicle operation without having the emission control system checked and repaired as necessary could cause serious damage, which may not be covered by your vehicle's warranty.

If this light comes on steadily or blinks while the engine is running, it may indicate that there is a problem or potential problem somewhere in the emission control system.

▼ If the light comes on steadily:

If the light comes on steadily while driving or does not go out after the engine starts, an emission control system malfunction has been detected.
You should have your vehicle checked by an authorized SUBARU dealer immediately.

NOTE

This light also comes on when the fuel filler cap is not tightened until it clicks.

If you have recently refueled your vehicle, the cause of the CHECK ENGINE warning light/malfunction indicator lamp coming on could be a loose or missing fuel filler cap. Remove the cap and retighten it until it clicks. Make sure nothing is interfering with the sealing of the cap. Tightening the cap will not make the CHECK ENGINE warning light turn off immediately. It may take several driving trips. If the light does not go out, take your vehicle to your authorized SUBARU dealer immediately.

▼ If the light is blinking:

If the light is blinking while driving, an engine misfire condition has been detected which may damage the emission control system.
To prevent serious damage to the emission control system, you should do the following.
- Reduce vehicle speed.
- Avoid hard acceleration.
- Avoid steep uphill grades.
- Reduce the amount of cargo, if possi-

– CONTINUED –

ble.
- Stop towing a trailer as soon as possible.

The CHECK ENGINE warning light may stop blinking and come on steadily after several driving trips. You should have your vehicle checked by an authorized SUBARU dealer immediately.

■ Charge warning light

If this light comes on when the engine is running, it may indicate that the charging system is not working properly.

If the light comes on while driving or does not go out after the engine starts, stop the engine at the first safe opportunity and check the alternator belt. If the belt is loose, broken or if the belt is in good condition but the light remains on, contact your nearest SUBARU dealer immediately.

■ Oil pressure warning light

If this light comes on when the engine is running, it may indicate that the engine oil pressure is low and the lubricating system is not working properly.
If the light comes on while driving or does not go out after the engine starts, stop the engine at the first safe opportunity and check the engine oil level. If the oil level is low, add oil immediately. If the engine oil is at the proper level but the light remains on, contact your nearest SUBARU dealer immediately.

⚠ CAUTION

Do not operate the engine with the oil pressure warning light on. This may cause serious engine damage.

■ AT OIL TEMPerature warning light (AT vehicles)

AT OIL TEMP

The AT oil temperature warning light comes on when the ignition switch is turned to the “ON” position and goes out after the engine has started.
If this light comes on when the engine is running, it may indicate that the automatic transmission fluid temperature is too hot.

If the light comes on while driving, it is unnecessary to stop the vehicle, but avoid driving up steep grades or in stop and go traffic.

▼ Automatic transmission control system warning

If the light flashes after the engine starts, it may indicate that the automatic transmission control system is not working properly. Contact your nearest SUBARU dealer for service immediately.

■ ABS warning light

ABS (U.S.)
(ABS) (Canada)

The ABS warning light comes on when the ignition switch is turned to the “ON” position and goes out after approximately two seconds.
This is an indication that the ABS system is working properly.

⚠ CAUTION

If the warning light behaves as follows, the ABS system may not work properly.

When the warning light is on, the ABS function shuts down; however, the conventional brake system continues to operate normally.

- **The warning light does not come on when the ignition switch is turned to the “ON” position.**

- **The warning light comes on when the ignition switch is turned to the "ON" position, but it does not go out even when the vehicle speed exceeds approximately 8 mph (12 km/h).**
- **The warning light comes on during driving.**

If any of these conditions occur, have the ABS system repaired at the first available opportunity by your SUBARU dealer.

With a vehicle equipped with an EBD system, the ABS warning light comes on together with the brake system warning light if the EBD system becomes faulty. For further details of the EBD system fault warning, refer to "Brake system warning light".

NOTE

If the warning light behavior is as described in the following, the ABS system may be considered normal.

- **The warning light comes on right after the engine is started but goes out immediately, remaining off.**
- **The warning light remains on after the engine has been started, but it goes out when the vehicle speed reaches approximately 8 mph (12 km/h).**
- **The warning light comes on during driving, but it goes out immediately and remains off.**

When driving with an insufficient battery voltage such as when the engine is jump started, the ABS warning light may come on. This is due to the low battery voltage and does not indicate a malfunction. When the battery becomes fully charged, the light will go out.

■ Vehicle Dynamics Control warning light (if equipped)/Vehicle Dynamics Control OFF indicator light (if equipped)

This warning light has the function of indicating faults in the Vehicle Dynamics Control system and the function of indicating that the Vehicle Dynamics Control system has been deactivated.

It comes on in the event of a fault in the system and is on when the system is not operating.

This warning light comes on when the ignition switch is turned to the "ON" position and goes out after the engine has started. It indicates that the Vehicle Dynamics Control system is in normal operation.

▼ Vehicle Dynamics Control warning light

The Vehicle Dynamics Control system is probably inoperative under any of the following conditions. Have your vehicle checked at a SUBARU dealer immediately.

- The warning light does not come on when the ignition switch is turned to the "ON" position.
- The warning light comes on while the vehicle is running.
- If the electrical circuit of the Vehicle Dynamics Control system itself becomes faulty, the warning light only comes on. At this time, the ABS (Anti-lock Brake System) remains fully operational.
- The warning light comes on when the electronic control system of the ABS/Vehicle Dynamics Control system becomes faulty.

The Vehicle Dynamics Control system provides its ABS control through the electrical circuit of the ABS system. Accordingly, if the ABS is inoperative, the Vehicle Dynamics Control system becomes unable to provide ABS control. As a result, the Vehicle Dynamics Control system also becomes inoperative, causing the warning light to come on. Though both the Vehicle Dynamics Control and ABS systems are inoperative in this case, the ordinary func-

– CONTINUED –

tions of the brake system are still available. You will be safe while driving with this condition, but have your vehicle checked at a SUBARU dealer as soon as possible.

NOTE

If the warning light behavior is as shown in the following, the Vehicle Dynamics Control system may be considered normal.

- **The warning light comes on right after the engine is started but goes out immediately, remaining off.**
- **The warning light comes on after engine startup and goes off while the vehicle is subsequently being driven.**
- **The warning light comes on during driving, but it goes out immediately and remains off.**

▼ Vehicle Dynamics Control OFF indicator light

- It comes on when the Vehicle Dynamics Control OFF switch is pressed.
- It also comes on when the Vehicle Dynamics Control system is deactivated.

NOTE

- **The light may stay on for a while after the engine has been started, especially in cold weather. This does not indicate the existence of a problem. The light should go out as soon as the engine has warmed up.**
- **The indicator light comes on when the engine has developed a problem and the Malfunction indicator light is on.**

The Vehicle Dynamics Control system is probably faulty under the following condition. Have your vehicle checked at a SUBARU dealer as soon as possible.

- The light does not go out even after the lapse of several minutes (the engine has warmed up) after the engine has started.

■ Brake system warning light

BRAKE (U.S.)
(Canada)

⚠ WARNING

- **Driving with the brake system warning light on is dangerous. This indicates your brake system may not be working properly. If the light remains on, have the brakes inspected by a SUBARU dealer immediately.**
- **If at all in doubt about whether the brakes are operating properly, do not drive the vehicle. Have your vehicle towed to the nearest SUBARU dealer for repair.**

This light has the following three functions:

▼ Parking brake warning

The light comes on with the parking brake applied while the ignition switch is in the “ON” position. It goes out when the parking brake is fully released.

▼ Brake fluid level warning

This light comes on when the brake fluid level has dropped to near the “MIN” level of the brake fluid reservoir with the ignition switch in the “ON” position and with the parking brake fully released.

If the brake system warning light should come on while driving (with the parking brake fully released and with the ignition switch positioned in “ON”), it could be an indication of leaking of brake fluid or worn brake pads. If this occurs, immediately stop the vehicle at the nearest safe place and check the brake fluid level. If the fluid level is below the “MIN” mark in the reservoir, do not drive the vehicle. Have the vehicle towed to the nearest SUBARU dealer for repair.

▼ Electronic Brake Force Distribution (EBD) system warning (vehicles with EBD)

The brake system warning light also illu-

minates if a malfunction occurs in the EBD system. In that event, it comes on together with the ABS warning light.
The EBD system may be malfunctioning if the brake system warning light and ABS warning light illuminate simultaneously during driving.
Even if the EBD system fails, the conventional braking system will still function. However, the rear wheels will be more prone to locking when the brakes are applied harder than usual and the vehicle's motion may therefore become somewhat harder to control.
If the brake system warning light and ABS warning light illuminate simultaneously, take the following steps:
1. Stop the vehicle in the nearest safe, flat place.
2. Shut down the engine, then restart it.
3. Release the parking brake. If both warning lights go out, the EBD system may be faulty.
Drive carefully to the nearest SUBARU dealer and have the system inspected.
4. If both warning lights come on again and stay illuminated after the engine has been restarted, shut down the engine again, apply the parking brake, and check the brake fluid level.
5. If the brake fluid level is not below the "MIN" mark, the EBD system may be faulty. Drive carefully to the nearest SUBARU dealer and have the system inspected.
6. If the brake fluid level is below the "MIN" mark, DO NOT drive the vehicle. Instead, have the vehicle towed to the nearest SUBARU dealer for repair.

■ Door open warning lights

The door open warning light comes on if any door or the rear gate is not fully closed.

Always make sure this light is out before you start to drive.

■ Low fuel warning light

The low fuel warning light comes on when the tank is nearly empty [approximately 2.3 US gal (9.0 liters, 1.9 Imp gal)]. It only operates when the ignition switch is in the "ON" position.

NOTE

This light does not go out unless the tank is replenished up to an internal fuel quantity of approximately 4.0 US gal (15 liters, 3.3 Imp gal).

■ All-Wheel Drive warning light (AT vehicles) AWD

⚠ WARNING

Continued driving with the AWD warning light flashing can lead to powertrain damage. If the AWD warning light flashes, promptly park in a safe place then check whether all four tires are the same diameter and whether any of the tires has a puncture or has lost air pressure for some other reason.

The All-Wheel Drive indicator light comes on when the ignition switch is turned to the "ON" position and goes out after the engine has started.

▼ For vehicles with Vehicle Dynamics Control system

This light flashes if the vehicle is driven with tires of different diameters or with the air pressure excessively low in any of its tires.

▼ For vehicles without Vehicle Dynamics Control system

This light comes on when All-Wheel Drive is disengaged and the drive mechanism is switched to Front Wheel Drive for maintenance or similar purposes.

– CONTINUED –

This light flashes if the vehicle is driven with tires of different diameters or with the air pressure excessively low in any of its tires.

■ Vehicle Dynamics Control operation indicator light (if equipped)

This light comes on when the ignition switch is ON and goes out approximately 2 seconds later.
It blinks when the skid suppression function is activated. It illuminates when only the traction control function is operating.

The Vehicle Dynamics Control system is probably faulty under any of the following conditions. Have your vehicle checked at a SUBARU dealer immediately.
- The light does not come on when the ignition switch is turned to the “ON” position.
- The light does not go out even after a period of approximately 2 seconds after the ignition switch has been turned to the “ON” position.

■ Shift position indicator (AT vehicles)

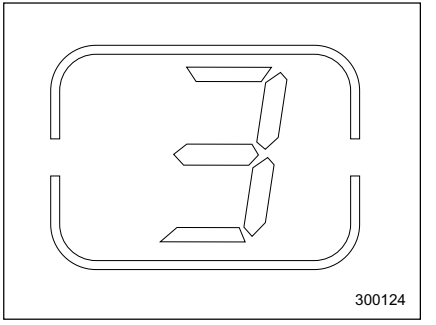

This indicator shows the position of the shift lever.

■ Turn signal indicator lights

These lights show the operation of the turn signal or lane change signal.
If the indicator lights do not blink or blink rapidly, the turn signal bulb may be burned out. Replace the bulb as soon as possible. Refer to the “Replacing bulbs” section in chapter 11.

■ High beam indicator light

This light shows that the headlights are in the high beam mode.
This indicator light also comes on when the headlight flasher is operated.

■ Cruise control indicator light CRUISE

The cruise control indicator light comes on when the ignition switch is turned to the “ON” position and goes out after approximately three seconds.
This light comes on when the “CRUISE” main switch is pressed.

NOTE

- **If you move the cruise control lever or press the main switch button while turning the ignition switch “ON”, the cruise control function is deactivated and the “CRUISE” indicator light flashes. To reactivate the cruise control function, turn the ignition switch back to the “ACC” or “LOCK” position, and then turn it again to the “ON” position.**
- **If this indicator light and the “ CHECK ENGINE ” indicator light flash simultaneously during driving, have the vehicle checked by your nearest SUBARU dealer.**

■ Cruise control set indicator light SET

The cruise control set indicator light comes on when the ignition switch is turned to the “ON” position and goes out after approximately three seconds.
This light comes on when vehicle speed has been set.

Clock

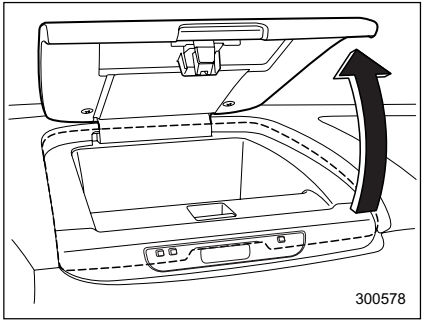

To adjust the clock, open the small article storage compartment in the dashboard with the vehicle parked in a safe place.

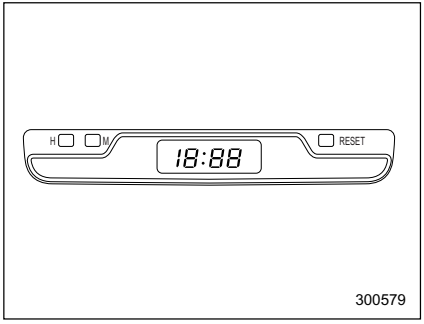

To set the hour, press the “H” button. To set the minutes, press the “M” button. To reset the minutes to “00” with a radio time signal, push the “Reset” button.

⚠ CAUTION

To ensure safety, do not attempt to set the time while driving, as an accident from inadequate attention to the road could result.

NOTE

The clock uses a liquid-crystal display. You will find time indications hard to see if you wear polarized glasses.

Light control switch

The light switch operates only when the ignition switch is in the “ON” position.

⚠ WARNING

To prevent battery discharge resulting from accidentally leaving your lights on when your vehicle is parked, the light switch operates only when the ignition switch is in the “ON” position. In any other position, the vehicle’s lights will be out.

If you park your vehicle on a roadside at night, use the hazard warning flasher to alert the other drivers.

■ Headlights

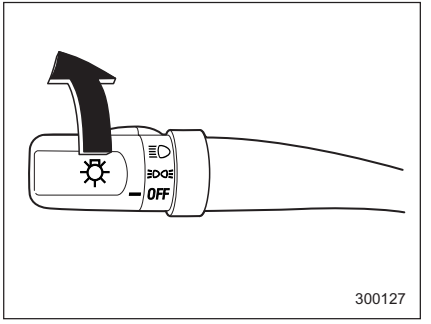

To turn on the headlights, turn the knob on the end of the turn signal lever.

first position:
Parking lights, instrument panel illumination, front side marker lights, tail lights and license plate light are on.

second position:
Headlights, parking lights, instrument panel illumination, front side marker lights, tail lights, and license plate light are on.

■ High/low beam change (dimmer)

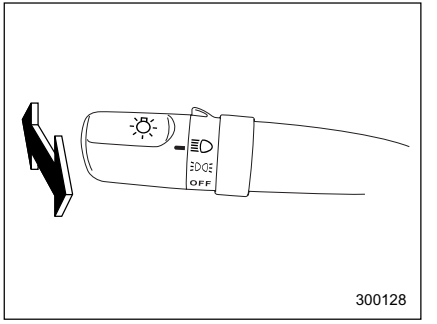

To change from low beam to high beam, push the turn signal lever forward. When the headlights are on high beam, the high beam indicator light “ ” on the instrument panel is also on.
To switch back to low beam, pull the lever back to the detent position.

■ Headlight flasher

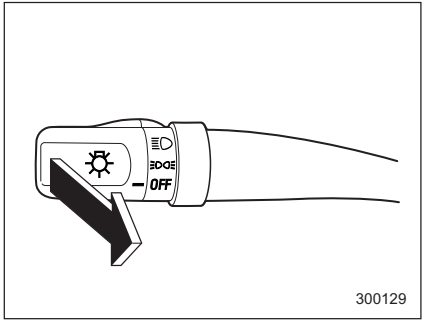

To flash the headlights, pull the lever toward you and then release it. The high beam will stay on for as long as you hold the lever. The headlight flasher works even though the lighting switch is in the "OFF" position.

When the headlights are on high beam, the high beam indicator light " ≣D " on the instrument panel also comes on.

⚠ CAUTION

Do not hold the lever in the flashing position for more than just a few seconds.

■ Daytime running light system

▼ Canada-spec. 2.5XT

⚠ WARNING

The parking lights, and side marker lights are not turned on by the daytime running light system. The light switch must always be turned to the " ≣D " position when it is dark outside.

The low beam headlights and tail lights will automatically come on when the engine has started, under the following conditions:

- The parking brake is fully released.
- The light switch is in the "OFF" or " ≣D◁≡ " position.
- The automatic transmission selector lever is set at other than the "P" position.

▼ All models except Canada-spec. 2.5XT

⚠ WARNING

The tail lights, parking lights, and side marker lights are not turned on by the daytime running light system. The light switch must always be turned to the " ≣D " position when it is dark outside.

The low beam headlights will automatically come on at reduced brightness when the engine has started, under the following conditions:

- The parking brake is fully released.
- The light switch is in the "OFF" or " ≣D◁≡ " position.
- The automatic transmission selector lever is set at other than the "P" position.

Turn signal lever

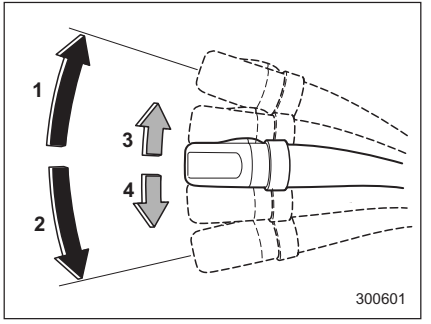

1) Right turn
2) Left turn
3) Lane change for right
4) Lane change for left

To activate the right turn signal, push the turn signal lever up. To activate the left turn signal, push the turn signal lever down. When the turn is finished, the lever will return automatically. If the lever does not return after cornering, return the lever to the neutral position by hand.

To signal a lane change, push the turn signal lever up or down slightly and hold it during the lane change. The turn signal indicator lights will flash in the direction of the turn or lane change. The lever will return automatically to the neutral position when you release it.

Illumination brightness control

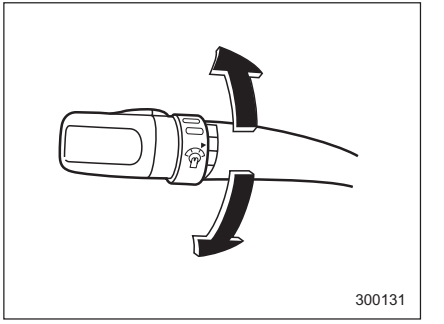

When the headlight switch is in the " ≡DC≡ " or " ≡D " position, you can adjust brightness of the instrument panel illumination for better visibility.
To brighten, turn the control dial upward.
To darken, turn the control dial downward.

Headlight beam leveler (Canada-spec. 2.5XT)

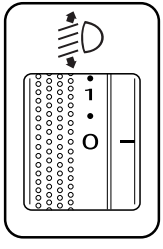

300133

The 2.5XT has High-Intensity Discharge (HID) headlights on the low beam setting. The HID headlights generate more light than conventional halogen headlights. Therefore a driver of an oncoming vehicle may experience too much glare when your headlight beam height adjustment is high due to the vehicle carrying a heavy load.
The headlight beam leveler can be used to adjust beam height to avoid such a condition.

The higher the number the switch is turned to, the lower the beam height becomes.

Parking light switch

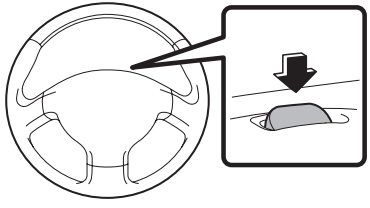

300134

The parking light switch operates regardless of the ignition switch position.

By pushing the front end of this switch, following lights will come on.
– Parking lights
– Front side marker lights
– Tail lights
– License plate lights

To turn off, push the rear end of the parking light switch.
Avoid leaving these lights on for a long time because that will run down the battery.

Front fog light button

300135

The front fog lights operate only when the headlights are on low beam. Push the front fog light button to turn the front fog lights on.
However, the front fog lights turn off when the headlights are switched to high beam.
Press the button again to turn them off.
The indicator light located on the button will illuminate when the front fog lights are on.

Wiper and washer

WARNING

In freezing weather, do not use the windshield washer until the windshield is sufficiently warmed by the defroster.

Otherwise the washer fluid can freeze on the windshield, blocking your view.

CAUTION

- **Do not operate the washer continuously for more than ten seconds, or when the washer fluid tank is empty. This may cause overheating of the washer motor. Check the washer fluid level frequently, such as at fuel stops.**
- **Do not operate the wipers when the windshield or rear window is dry. This may scratch the glass, damage the wiper blades and cause the wiper motor to burn out. Before operating the wiper on a dry windshield or rear window, always use the windshield washer.**
- **In freezing weather, be sure that the wiper blades are not frozen to the windshield or rear window before switching on the wipers. Attempting to operate the wiper with the blades frozen to the window glass could cause not only the wiper blades to be damaged but also the wiper motor to burn out. If the wiper blades are frozen to the window glass, be sure to operate the defroster, windshield wiper deicer (if equipped) or rear window defogger before turning on the wiper.**
- **If the wipers stop during operation because of ice or some other obstruction on the window, the wiper motor could burn out even if the wiper switch is turned off. If this occurs, promptly stop the vehicle in a safe place, turn the ignition switch to the "LOCK" position and clean the window glass to allow proper wiper operation.**
- **Use clean water if windshield washer fluid is unavailable. In areas where water freezes in winter, use SUBARU Windshield Washer Fluid or the equivalent. (See the "Windshield washer fluid" section in chapter 11.)**
  Also, when driving the vehicle when there are freezing temperatures, use non-freezing type wiper blades.
- **Do not clean the wiper blades with gasoline or a solvent, such as paint thinner or benzene. This will cause deterioration of the wiper blades.**

NOTE

- **The wiper operates only when the ignition switch is in the "ON" or "ACC" position.**
- **Clean your wiper blades and window glass periodically with a washer solution to prevent streaking, and to remove accumulations of road salt or road film. Keep the washer button depressed at least for 1 second so that washer solution will be sprinkled all over the windshield or rear window.**
- **Grease, wax, insects or other material on the windshield or the wiper blade results in jerky wiper operation and**

streaking on the glass. If you cannot remove those streaks after operating the washer or if the wiper operation is jerky, clean the outer surface of the windshield or rear window and the wiper blades using a sponge or soft cloth with a neutral detergent or mild-abrasive cleaner. After cleaning, rinse the window glass and wiper blades with clean water. The glass is clean if no beads form on the glass when you rinse with water.

- **If you cannot eliminate the streaking even after following this procedure, replace the wiper blades with new ones. Refer to the "Replacement of wiper blades" section (chapter 11) for replacement instructions.**

■ Windshield wiper and washer switches

▼ Windshield wipers

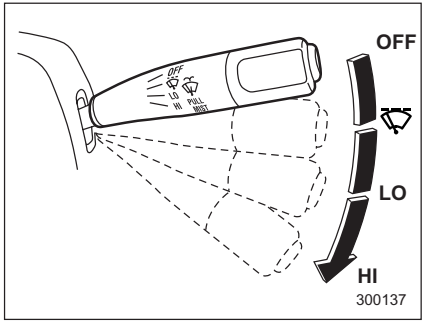

OFF	:	Park
	:	Intermittent
LO	:	Low speed
HI	:	High speed

To turn the wipers on, push the wiper control lever down.
To turn the wipers off, return the lever to the "OFF" position.

▼ Wiper intermittent time control (if equipped)

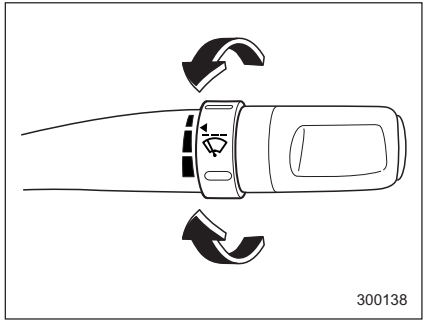

When the wiper switch is in the " " position, turn the dial to adjust the operating interval of the wiper.

The operating interval can be adjusted continuously from the shortest interval to the longest.
Two click stop positions of the dial may help you to aim at your desired interval.

– CONTINUED –

▼ **Mist (for a single wipe)**

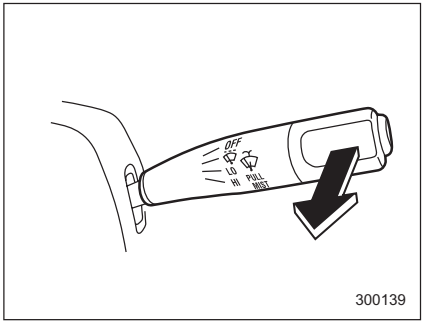

300139

For a single wipe of the wipers, pull the lever toward you. The wipers operate until you release the lever.

▼ **Washer**

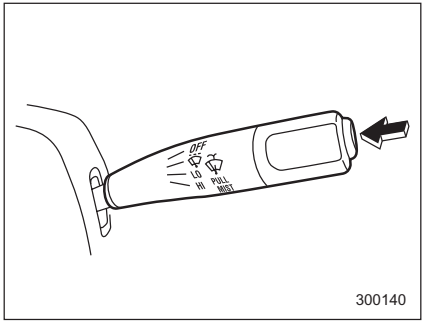

300140

To wash the windshield, push the washer button at the end of the wiper control lever. The washer fluid sprays until you release the washer button. The wipers operate while you push the button.

■ Rear window wiper and washer switch

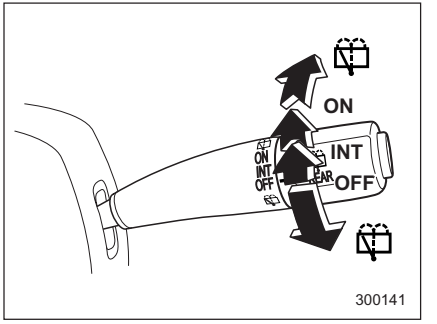

300141

	:	Washer (accompanied by wiper operation)
ON	:	Normal
INT	:	Intermittent
OFF	:	Park
	:	Washer

▼ **Rear wiper**

To turn the rear wiper on, turn the knob on the end of the wiper control lever upward.

INT: Intermittent
ON: Normal

To turn the wiper off, return the knob on the end of the lever to the “OFF” position.

▼ **Washer**

To wash the rear window while the rear wiper is operating, turn the knob on the end of the wiper control lever counterclockwise to the “ ” position. The washer fluid sprays until you release the knob.

To wash the rear window when the rear wiper is not in use, turn the knob on the end of the wiper control lever clockwise to the “ ” position. The washer fluid sprays and the wiper operates until you release the knob.

Windshield wiper deicer (if equipped)

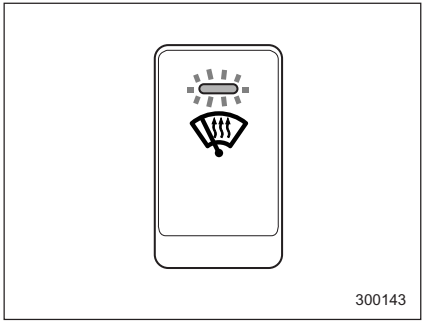

The windshield wiper deicer operates only when the ignition switch is in the “ON” position.
Before turning on the windshield wiper deicer, remove any snow from the windshield. To turn on the windshield wiper deicer, push the button. The indicator light located on the button lights up while the windshield wiper deicer is operating.
The windshield wiper deicer will automatically shut off after approximately 15 minutes. If the wiper blades have been deiced completely before that time, push the button to turn it off. It also turns off when the ignition switch is turned to the “ACC” or “LOCK” position. If deicing is not complete, you have to push the button to turn the deicer on again.

⚠ CAUTION

To prevent the battery from being discharged, do not operate the windshield wiper deicer continuously for any longer than necessary.

NOTE

If your vehicle is equipped with the outside mirror defogger, the outside mirror defogger operates while the windshield wiper deicer is operating.

Rear window defogger button

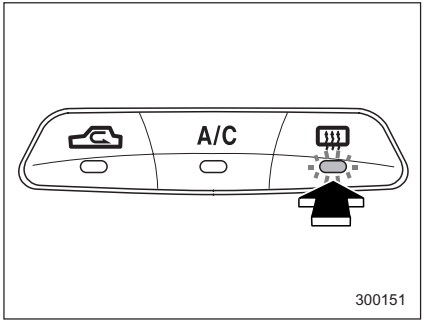

Manual climate control system

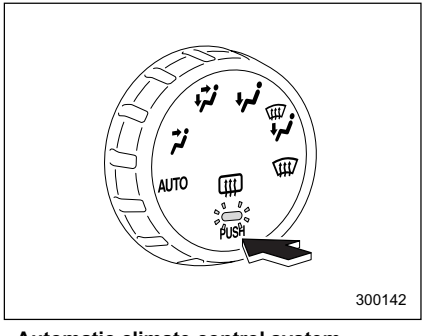

Automatic climate control system

– CONTINUED –

The rear window defogger operates only when the ignition switch is in the “ON” position.
The rear window defogger button is located on the climate control panel.
To turn on the defogger, push the button. To turn it off, push the button again.
The indicator light located on the button lights up while the rear window defogger is operating.

The defogger will automatically shut off after approximately 15 minutes. If the window clears before that time, push the button to turn it off. It also turns off when the ignition switch is turned to the “ACC” or “LOCK” position. If defrosting or defogging is desired when you restart your vehicle, you have to push the button to turn it on again.
Turn on the rear window defogger if the wiper is frozen to the glass.

CAUTION

- **Do not use sharp instruments or window cleaner containing abrasives to clean the inner surface of the rear window. They may damage the conductors printed on the window.**
- **To prevent the battery from being discharged, do not operate the defogger continuously for any longer than necessary.**

Mirrors

Always check that the inside and outside mirrors are properly adjusted before you start driving.

■ Inside mirror

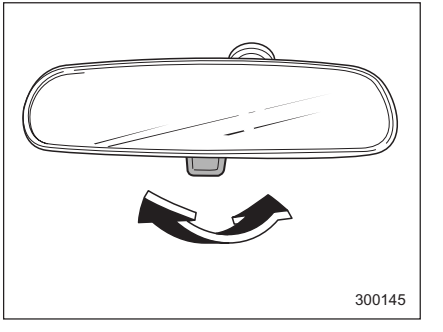

The inside mirror has a day and night position. Pull the tab at the bottom of the mirror toward you for the night position. Push it away for the day position. The night position reduces glare from headlights.

▼ Auto-dimming mirror/compass (if equipped)

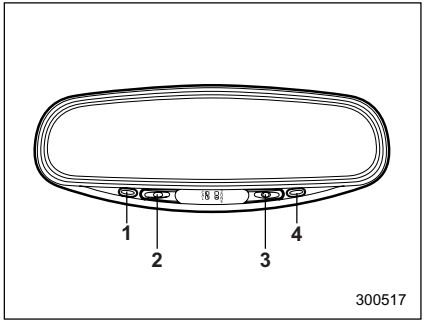

1) Left button
2) Auto dimming indicator
3) Photosensor
4) Right button

The inside electronic compass mirror has an anti-glare feature which automatically reduces glare coming from headlights of vehicles behind you. It also contains a built-in compass.

- By pressing and releasing the left button, the automatic dimming function is toggled on or off. When the automatic dimming function is on, the auto dimming indicator light (green) located to the right of the button will illuminate.
- By pressing and releasing the right button, the compass display is toggled on or off. When the compass is on, an illuminated compass reading will appear in the lower part of the mirror.

Even with the mirror in anti-glare mode, the mirror surface turns bright if the transmission is shifted into reverse. This is to ensure good rearward visibility during reversing.

▽ Photosensors

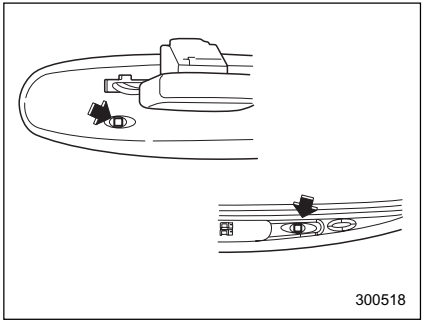

The mirror has a photosensor attached on both the front and back sides. If the glare from the headlights of vehicles behind you strikes the mirror, these sensors detect it and make the reflection surface of the mirror dimmer to help prevent you from being blinded. For this reason, use care not to cover the sensors with stickers, or other similar items. Periodically wipe the sensors clean using a piece of dry soft cotton cloth or an applicator.

▽ Compass calibration

1. For optimum calibration, switch off all nonessential electrical accessories (rear window defogger, heater/air conditioning system, spotlight, etc.) and ensure all doors are shut.
2. Drive to an open, level area away from large metallic objects or structures and make certain the ignition switch is in the “ON” position.
3. Press and hold the left button for 3 seconds then release, and the compass will enter the calibration mode. “CAL” and direction will be displayed.
4. Drive slowly in a circle until “CAL” disappears from the display (approximately two or three circles).
5. The compass is now calibrated. Further calibration is not required. The compass will automatically calibrate from this point forward.

– CONTINUED –

▽ **Compass zone adjustment**

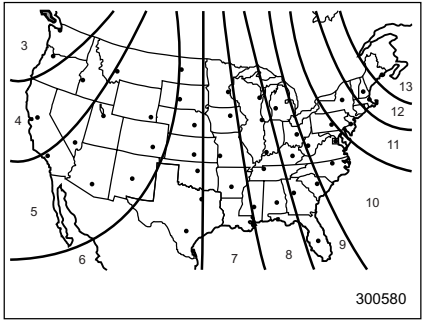

Compass calibration zones

1. The zone setting is factory preset to Zone 8. Refer to the “Compass calibration zone” map shown above or one attached to the end of this manual to verify that the compass zone setting is correct for your geographical location.
2. Press and hold the right button for 3 seconds then release, and the word “ZONE” will briefly appear and then the zone number will be displayed.
3. Press the right-hand button repeatedly to cycle the display through all possible zone settings. Stop cycling when the correct zone setting for your location is displayed.
4. Releasing the button for 3 seconds will exit the zone setting mode.

■ Outside mirrors

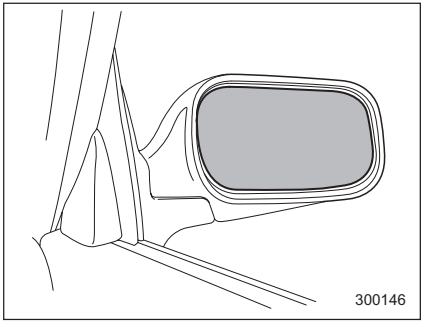

▼ **Convex mirror (passenger side)**

⚠ WARNING

Objects look smaller in a convex mirror and farther away than when viewed in a flat mirror. Do not use the convex mirror to judge the distance of vehicles behind you when changing lanes. Use the inside mirror (or glance backwards) to determine the actual size and distance of objects that you view in convex mirror.

▼ **Remote control mirror switch**

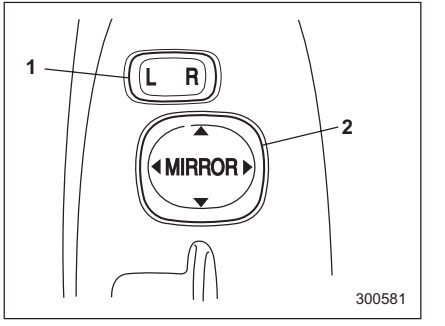

1) Selection switch
2) Direction control switch

The remote control mirrors operate only when the ignition switch is in the “ON” or “ACC” position.
1. Press either end of the selection switch, “L” for the left, “R” for the right.
2. Move the direction control switch in the direction you want to move the mirror.
3. Return the selection switch to the neutral position to prevent unintentional operation.

The mirrors can also be adjusted manually.

▼ **Outside mirror defogger**

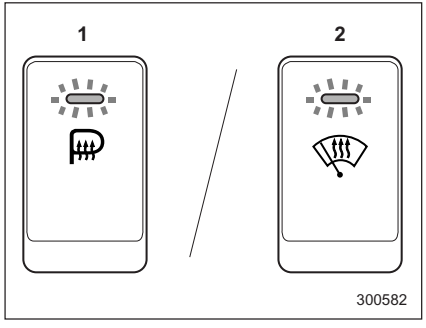

1) Outside mirror defogger button (if equipped)
2) Outside mirror defogger and windshield wiper deicer button (if equipped)

The outside mirror defogger operates only when the ignition switch is in the “ON” position.
To turn on the outside mirror defogger, push the button. To turn it off, push the button again. The indicator light located on the button lights up while the outside mirror defogger is operating.

The defogger will automatically shut off after approximately 15 minutes. If the mirror clears before that time, push the button to turn it off. It also turns off when the ignition switch is turned to the “ACC” or “LOCK” position. If defrosting or defogging is desired when you restart your vehicle, you have to push the button to turn it on again.

NOTE

On vehicles equipped with a windshield wiper deicer, the windshield wiper deicer switch is also used to operate the outside mirror defogger.

⚠ CAUTION

To prevent the battery from being discharged, do not operate the defogger continuously for any longer than necessary.

Tilt steering wheel

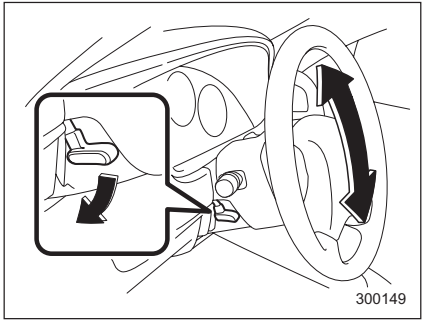

1. Adjust the seat position. Refer to the “Front seats” section (chapter 1).
2. Push the tilt lock lever down.
3. Move the steering wheel to the desired level.
4. Pull the lever up to lock the steering wheel in place.
5. Make sure that the steering wheel is securely locked by moving it up and down.

⚠ WARNING

Do not adjust the steering wheel tilt position while driving. This may cause loss of vehicle control and result in personal injury.

Horn

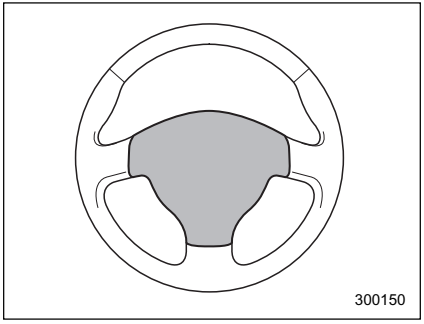

To sound the horn, push the horn pad.

Ventilator 4-2
Air flow selection 4-2
Center and side ventilators 4-3
Manual climate control system (if equipped) .. 4-3
Control panel 4-3
Heater operation 4-5
Air conditioner operation 4-7
Automatic climate control system (if equipped) 4-8
Control panel 4-8
To use as full-automatic climate control system 4-8
To use as semi-automatic climate control system 4-8
Fan speed control dial 4-9
Temperature control dial 4-9
Air flow control dial 4-9
Air inlet selection button 4-10
Air conditioner button 4-10
Temperature sensors 4-11
Operating tips for heater and air conditioner .. 4-11
Cleaning ventilation grille 4-11
Efficient cooling after parking in direct sunlight 4-11
Lubrication oil circulation in the refrigerant circuit 4-12
Checking air conditioning system before summer season 4-12
Cooling and dehumidifying in high humidity and low temperature weather conditions 4-12
Air conditioner compressor shut-off when engine is heavily loaded 4-12
Refrigerant for your climate control system 4-12
Air filtration system (if equipped) 4-12
Replacing an air filter 4-13

Ventilator

■ Air flow selection

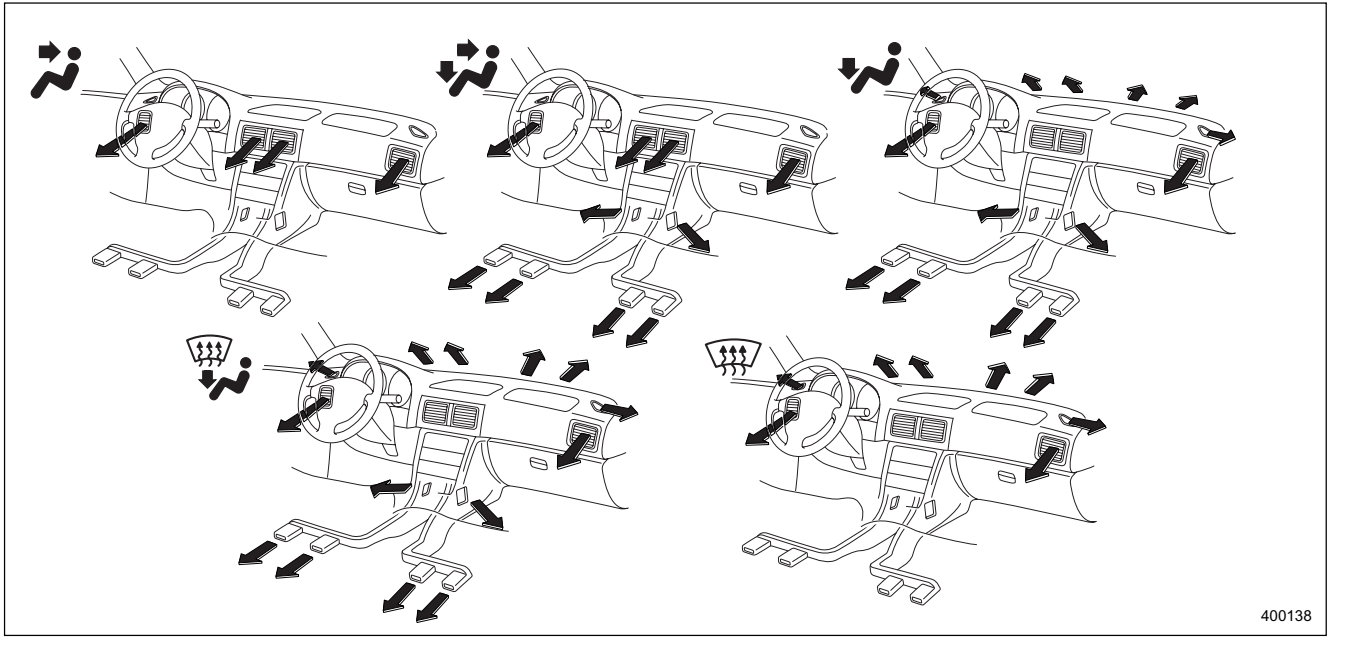

■ Center and side ventilators

▼ Center ventilators

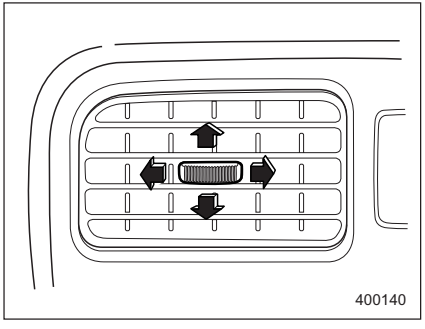

Move the tab up and down or right and left to adjust the flow direction.

▼ Side ventilators

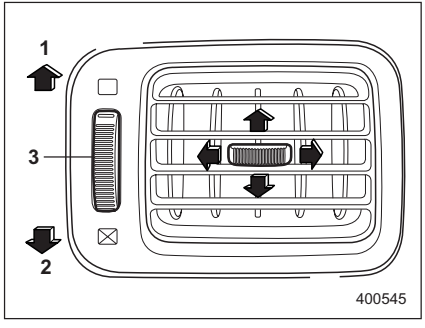

1) Open
2) Close
3) Thumb-wheel

Move the tab up and down or right and left to adjust the flow direction.
To open or close the ventilator, turn the thumb-wheel up or down.

Manual climate control system (if equipped)

■ Control panel

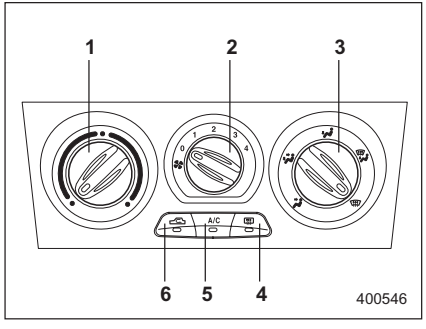

1) Temperature control dial
2) Fan speed control dial
3) Air flow control dial
4) Rear window defogger button (Refer to the “Rear window defogger button” in chapter 3.)
5) Air conditioner button
6) Air inlet selection button

▼ Temperature control dial

This dial regulates the temperature of air flow from the air outlets over a range from the blue side (cool) to red side (warm).

– CONTINUED –

▼ Fan speed control dial

The fan operates only when the ignition switch is turned to the “ON” position. The fan speed control dial is used to select four fan speeds.

▼ Air flow control dial

This dial has the following five positions:

: Air flows through the instrument panel outlets.

: Air flows through the instrument panel outlets and the foot outlets.

: Air flows through the foot outlets and some through the windshield defroster outlets.

: Air flows through the windshield defroster outlets and foot outlets.

: Air flows through the windshield defroster outlets.

NOTE

When the dial is placed in the “ ” or “ ” position, the air conditioner compressor operates automatically regardless of the position of the air conditioner button to defog the windshield quickly. However the indicator on the air conditioner button will not come on.

At the same time, the air inlet selection is automatically set to “outside air” mode.
In this state, you cannot select “recirculation” mode by manually pressing the air inlet selection button.
Also, you cannot stop the air conditioner compressor by pressing the air conditioner button.

▼ Air conditioner button

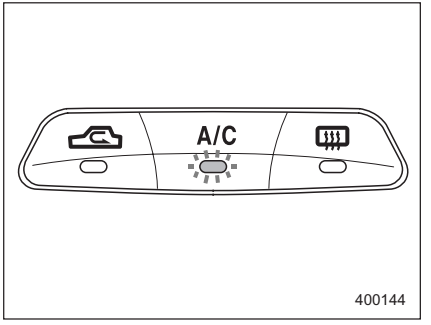

The air conditioner operates only when the engine is running.

Push the air conditioner button while the fan is in operation to turn on the air conditioner. The indicator light will come on.

Push it again to turn off the air conditioner.

▼ Air inlet selection button

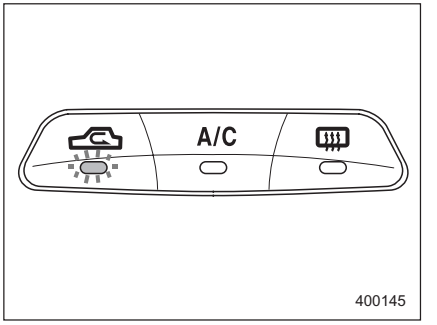

ON position (Recirculation): Interior air is recirculated inside the vehicle. Push the air inlet selection button to the ON position. The indicator light will come on.
Place the air inlet selection button to the ON position for fast cooling with the air conditioner or when driving on a dusty road.

OFF position (Outside air): Outside air is drawn into the passenger compartment. Push the air inlet selection button again to the OFF position. The indicator light will go off.
Place the air inlet selection button to the OFF position when the interior has cooled to a comfortable temperature and the road is no longer dusty.

⚠ WARNING

Continued operation with the air inlet selection button in the ON position may fog up the windows. Switch to the OFF position as soon as the outside dusty condition clears.

■ Heater operation

▼ Defrosting or defogging the windshield

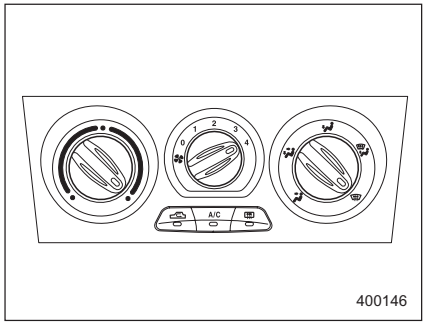

To direct warm air to the windshield and front door windows:
1. Set the air flow control dial to the " " position.
2. Turn the temperature control dial all the way to the right.
3. Set the fan speed control dial to the highest speed.

If your vehicle is equipped with an air conditioner, when the " " or " " position is selected, the air conditioner compressor automatically operates regardless of the position of the air conditioner button to defog the windshield quickly.
However, the air conditioner indicator light does not come on at this time.

NOTE

Warm air also comes out from the right and left air outlets. To stop warm air flow from these outlets, turn the corresponding thumb-wheel down.

▼ Heating and defrosting

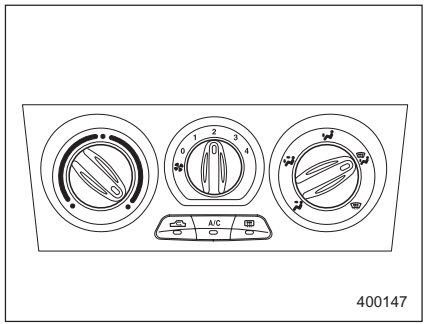

To direct warm air toward the floor and the windshield:
1. Set the air flow control dial to the " " position.
2. Set the temperature control dial to the most comfortable level.
3. Set the fan speed control dial to the desired speed.

If your vehicle is equipped with an air conditioner, when the " " or " " position is selected, the air conditioner compressor automatically operates regardless of the position of the air conditioner button to defog the windshield quickly.
However, the air conditioner indicator light does not come on at this time.

NOTE

Warm air also comes out from the right and left air outlets. To stop warm air flow from these outlets, turn the corresponding thumb-wheel down.

– CONTINUED –

▼ Heating

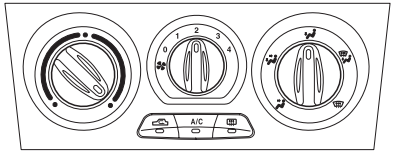

400148

To direct warm air toward the floor:
1. Set the air inlet selection button to the OFF position.
2. Set the air flow control dial to the " " position.
3. Set the temperature control dial to the most comfortable level.
4. Set the fan speed control dial to the desired speed.

NOTE

Warm air also comes out from the right and left air outlets. To stop warm air flow from these outlets, turn the corresponding thumb-wheel down.

▼ Bi-level heating

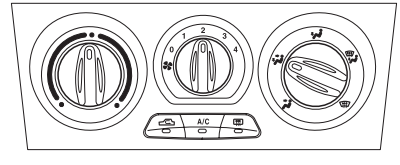

400149

This setting allows you to direct air of different temperatures from the instrument panel and foot outlets. The air from the foot outlets is slightly warmer than from the instrument panel outlets.
1. Set the air inlet selection button to the OFF position.
2. Set the air flow control dial to the " " position.
3. Set the temperature control dial to the desired temperature level.
4. Set the fan speed control dial to the desired speed.

Setting the temperature control dial fully turned to the red area or blue area decreases the temperature difference between the air from the instrument panel outlets and the air from the foot outlets.

▼ Ventilation

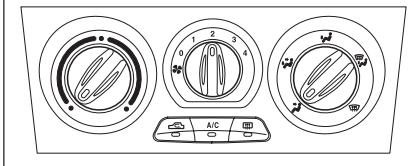

400150

To force outside air through the instrument panel outlets:
1. Set the air inlet selection button to the OFF position.
2. Set the air flow control dial to the " " position.
3. Set the temperature control dial all the way left.
4. Set the fan speed control dial to the desired speed.

When driving on a dusty road, set the air inlet selection button to the "ON" position.

⚠ WARNING

Continued operation with the air inlet selection button in the ON position may fog up the windows. Switch to the OFF position as soon as the outside dusty condition clears.

■ Air conditioner operation

▼ Cooling or dehumidifying

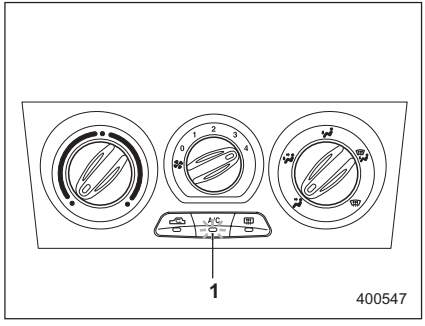

1) ON position

For cooling and dehumidification of the passenger compartment, performing the following steps will allow air to flow through the instrument panel outlets:

1. Set the air inlet selection button to the OFF position.
2. Set the air flow control dial to the “ ” position.
3. Set the air conditioner button to the “ON” position.
4. Set the temperature control dial to the blue side.
5. Set the fan speed control dial at the highest speed.

▼ Defrosting or defogging

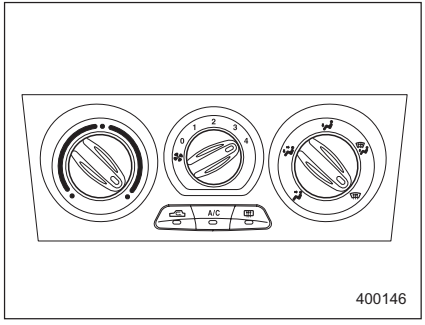

To direct warm air to the windshield and front door windows:

1. Set the air flow control dial to the “ ” position.
2. Set the temperature control dial to the red side.
3. Set the fan speed control dial at the highest speed.

The air conditioner compressor automatically operates when the air flow control dial set in the “ ” or “ ” position to provide better defogging performance. However, the air conditioner indicator light does not come on at this time.

Automatic climate control system (if equipped)

Although this climate control system can be used as a full-automatic climate control system, it can also, if desired, be used as a semi-automatic climate control system.
When it is used as a full-automatic climate control system, the outlet air temperature, fan speed, air flow distribution, air inlet control, and air conditioner compressor operation are all automatically controlled to maintain a constant, comfortable temperature inside the vehicle.

NOTE

- **Operate the automatic climate control system when the engine is running.**
- **When the engine coolant is cold, the blower does not run.**
- **In the "AUTO" mode, when the air temperature in the passenger compartment is sufficiently cool, the air conditioner compressor does not operate. For efficient defogging or dehumidifying in cold weather, press the "A/C" button to operate the air conditioner compressor.**
- **Even when cooling is not necessary, setting the temperature much lower than the current outlet air temperature turns on the air conditioner compressor automatically and the "A/C" indicator light on the control panel comes on.**

■ Control panel

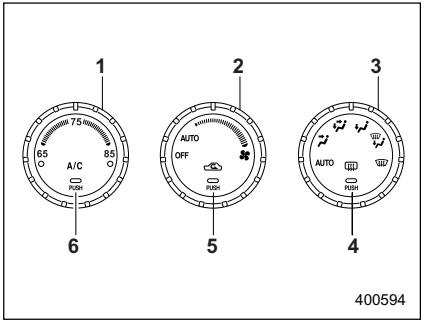

1) Temperature control dial
2) Fan speed control dial
3) Air flow control dial
4) Rear window defogger button (Refer to the "Rear window defogger button" in chapter 3.)
5) Air inlet selection button
6) Air conditioner button

■ To use as full-automatic climate control system

Place the temperature control dial in the position for your desired temperature, then set the other dials and buttons as described in the following. The system's functions will then switch to AUTO mode and be controlled automatically.

- Air flow control dial: AUTO position
- Fan speed control dial: AUTO position
- Air inlet selection button: Press for at least 1 second. (Indicator will flash twice.)
- Air conditioner button: Press for at least 1 second. (Indicator will flash twice.)

■ To use as semi-automatic climate control system

Each function can be individually set to AUTO mode independently of the others. Any function set to AUTO mode is controlled automatically. Any function not set to AUTO mode can be manually adjusted as desired.
The temperature can be set within a range of 65 to 85°F (20 to 30°C).

■ Fan speed control dial

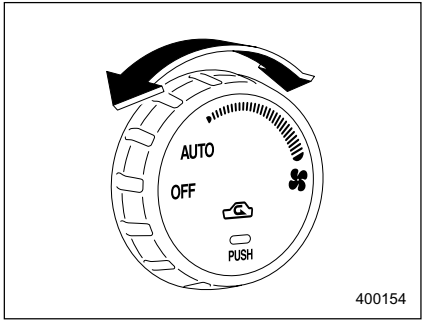

The fan operates only with the ignition switch in the ON position. The fan speed control dial is used to select the AUTO (automatic control) mode or to select the desired fan speed. The dial's positions and their functions are as follows:

OFF: The fan does not operate.

AUTO: The fan speed is adjusted automatically in accordance with the air temperature inside and outside the passenger compartment, the intensity of sunlight, and other factors. SUBARU recommends using the AUTO position.

Other positions: The fan speed can be adjusted in seven steps.

NOTE

With the fan speed control dial in the AUTO position and the air flow control dial in the " ", " ", or " " position, the fan does not operate during engine warmup until the engine coolant temperature exceeds approx. 122°F (50°C).

■ Temperature control dial

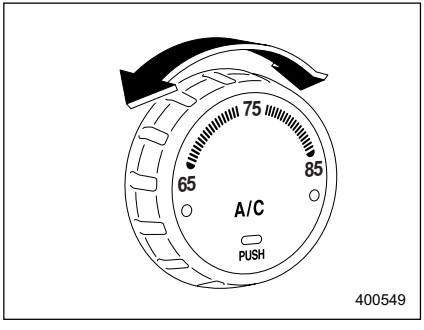

This dial is used to set the desired interior temperature. With the dial set to your desired temperature, the system automatically adjusts the temperature of air supplied from the outlets such that the desired temperature is achieved and maintained.

If the dial is turned fully counterclockwise, the system gives maximum cooling performance. If the dial is turned fully clockwise, the system gives maximum heating performance.

■ Air flow control dial

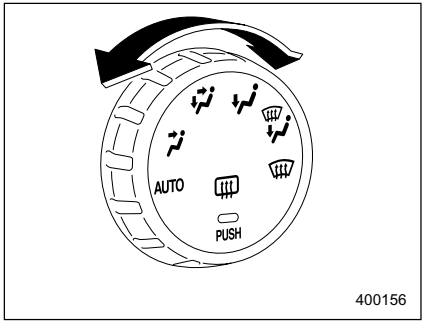

This dial has the following six positions. The outlets from which air is supplied in each position are as follows:

AUTO: The air flow control is adjusted automatically in accordance with the air temperature inside and outside the passenger compartment, the intensity of sunlight, and other factors. SUBARU recommends using the AUTO position.

: Instrument panel outlets

: Instrument panel outlets and foot outlets

: Foot outlets and windshield defroster outlets (relatively little air from windshield

– CONTINUED –

defroster outlets)

: Windshield defroster outlets and foot outlets

: Windshield defroster outlets

NOTE

When the dial is placed in the “ ” or “ ” position, the air conditioner compressor operates automatically to defog the windshield quickly. At the same time, the air inlet selection is automatically set to “outside air” mode.

■ Air inlet selection button

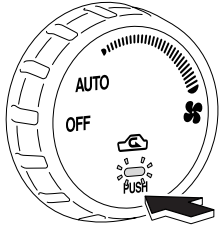

400157

ON position (Recirculation): Interior air is recirculated inside the vehicle. Push the air inlet selection button to the ON position for fast cooling with the air conditioner or when driving on a dusty road. The indicator light will come on.

OFF position (Outside Air): Outside air is drawn into the passenger compartment. Push the air inlet selection button to the OFF position when the interior has cooled to a comfortable temperature and the road is no longer dusty. The indicator light will go off.

AUTO: When the air inlet selection button is pressed for at least 1 second, the indicator flashes twice. The air inlet control is then adjusted automatically in accordance with the air temperature inside and outside the passenger compartment, the intensity of sunlight, and other factors. Pressing the air inlet selection button cancels the “AUTO” mode. SUBARU recommends using the AUTO position.

⚠ WARNING

Continued operation in the ON position may fog up the windows. Switch to the OFF position as soon as the outside dusty condition clears.

■ Air conditioner button

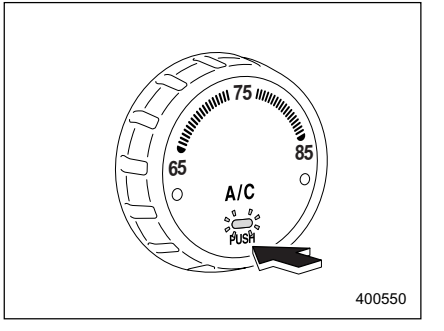

400550

The button’s positions and their functions are as follows:

ON: The air conditioner operates while the fan is running.
Push the button to select this position. The indicator light will come on.

OFF: The air conditioner does not operate.
Push the button again to select this position. The indicator light will go off.

AUTO: When the button is pressed for at least 1 second, the indicator flashes twice. The air conditioner compressor operation is then adjusted automatically in accordance with the air temperature inside and outside the passenger compartment, the intensity of sunlight, and other factors.

Pressing the button cancels the “AUTO” mode. SUBARU recommends using the AUTO position.

NOTE

The air conditioner’s compressor does not operate with an outside temperature of 32°F (0°C) or lower.

■ Temperature sensors

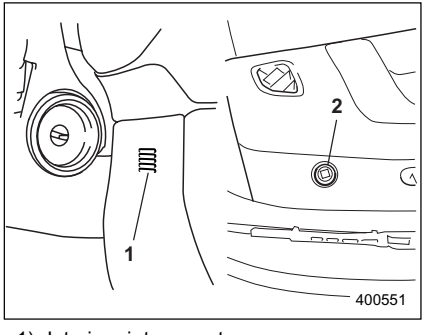

1) Interior air temperature sensor
2) Solar sensor

The automatic climate control system employs several sensors. These sensors are delicate. If they are not treated properly and become damaged, the system may not be able to control the interior temperature correctly. To avoid damaging the sensors, observe the following precautions:
– Do not subject the sensors to impact.
– Keep water away from the sensors.
– Do not cover the sensors.

The sensors are located as follows:
– Solar sensor: beside the windshield defroster grille.
– Interior air temperature sensor: near the ignition switch.
– Outside temperature sensor: behind the front grille.

Operating tips for heater and air conditioner

■ Cleaning ventilation grille

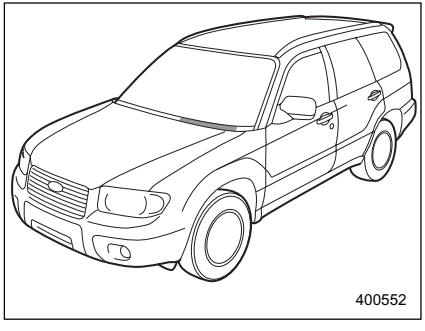

Always keep the front ventilation inlet grille free of snow, leaves, or other obstructions to ensure efficient heating and defrosting. Since the condenser is located in front of the radiator, this area should be kept clean because cooling performance is impaired by any accumulation of insects and leaves on the condenser.

■ Efficient cooling after parking in direct sunlight

After parking in direct sunlight, drive with the windows open for a few minutes to al-

– CONTINUED –

low outside air to circulate into the heated interior. This results in quicker cooling by the air conditioner. Keep the windows closed during the operation of the air conditioner for maximum cooling efficiency.

■ Lubrication oil circulation in the refrigerant circuit

Operate the air conditioner compressor at a low engine speed (at idle or low driving speeds) a few minutes each month during the off-season to circulate its oil.

■ Checking air conditioning system before summer season

Check the air conditioner unit for refrigerant leaks, hose conditions, and proper operation each spring. This check is best performed by your SUBARU dealer.

■ Cooling and dehumidifying in high humidity and low temperature weather conditions

Under certain weather conditions (high relative humidity, low temperatures, etc.) a small amount of water vapor emission from the air outlets may be noticed. This condition is normal and does not indicate any problem with the air conditioning system.

■ Air conditioner compressor shut-off when engine is heavily loaded

To improve acceleration and gas mileage, the air conditioner compressor is designed to temporarily shut off during air conditioner operation whenever the accelerator is fully depressed such as during rapid acceleration or when driving on a steep upgrade.

■ Refrigerant for your climate control system

Your air conditioner uses ozone friendly refrigerant HFC134a. Therefore, the method of adding, changing or checking the refrigerant is different from the method for CFC12 (freon). Consult your SUBARU dealer for service. Repairs needed as a result of using the wrong refrigerant are not covered under warranty.

Air filtration system (if equipped)

If your vehicle's air conditioning system is equipped with an air filtration system, replace the filter element according to the replacement schedule shown in the following. This schedule should be followed to maintain the filter's dust collection ability. Under extremely dusty conditions, the filter should be replaced more frequently. It is recommended that you have your filter checked or replaced by your SUBARU dealer. For replacement, use only a genuine SUBARU air filter kit.

Replacement schedule:

Every 12 months or 7,500 miles (12,000 km) whichever comes first

■ Replacing an air filter

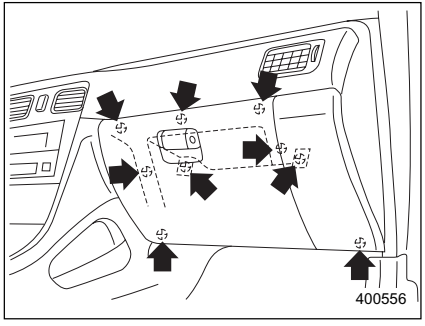

1. Remove the glove box.
   1) Open the glove box.
   2) Remove the nine screws securing the glove box.

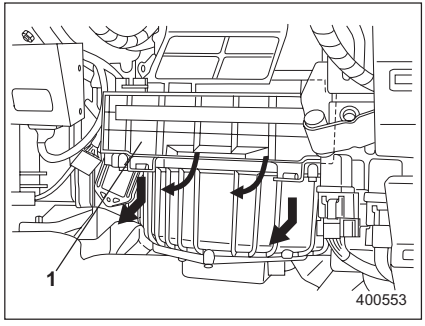

1) Air filter cover

2. Remove the air filter cover.

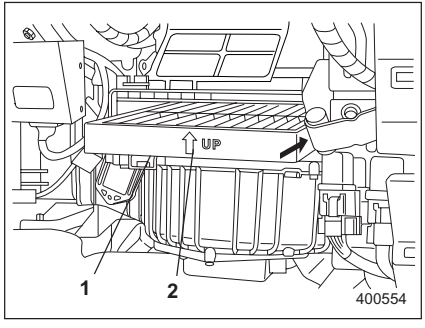

1) Air filter element
2) Arrow mark

3. Replace the air filter element with new one.

⚠ CAUTION

The arrow mark on the filter must point UP.

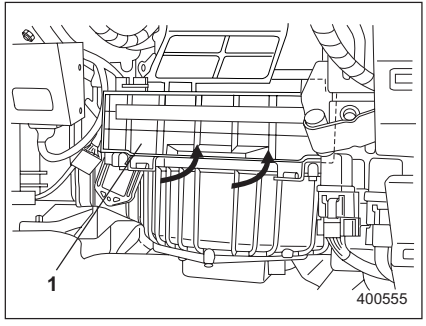

1) Air filter cover

4. Reinstall the air filter cover.

– CONTINUED –

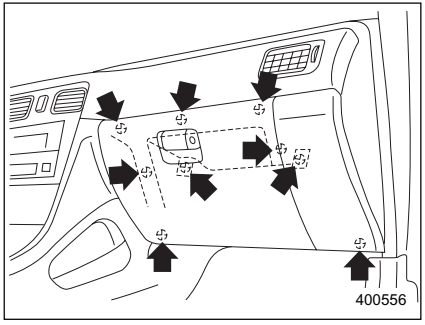

5. Reinstall the glove box.
6. Close the glove box.

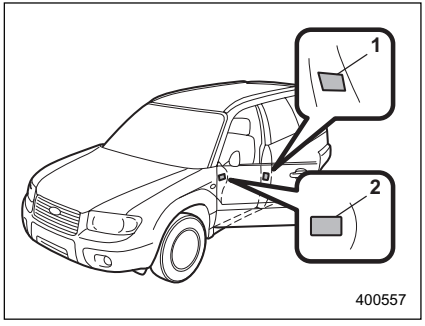

1) Service label
2) Caution label

7. LABEL installation

1) Fill out the information on the service label (small).
2) Attach the service label to the driver side door pillar and the caution label to the driver side end of the instrument panel.

⚠ CAUTION

Contact your dealer if the following occurs, even if it is not yet time to change the filter:

– Reduction of the air flow through the vents.

– Windshield gets easily fogged or misted.

NOTE

The filter can influence the air conditioning, heating and defroster performance if not properly maintained.

Antenna system 5-2
FM reception 5-2
Installation of accessories 5-2
Audio set 5-3
Type A audio set 5-3
Type B audio set 5-3
In-dash 6 CD auto changer (Optional audio unit – if equipped) 5-3
Type A audio set (if equipped) 5-4
Radio operation 5-4
Compact disc player operation 5-8
CD changer control (if optional in-dash CD changer is connected) 5-10
Type B audio set (if equipped) 5-12
Radio operation 5-12
Built-in CD changer operation 5-16
In-dash 6 CD auto changer (if equipped) 5-19
Loading and unloading compact discs 5-19
Precautions to observe when handling a compact disc 5-21

Antenna system

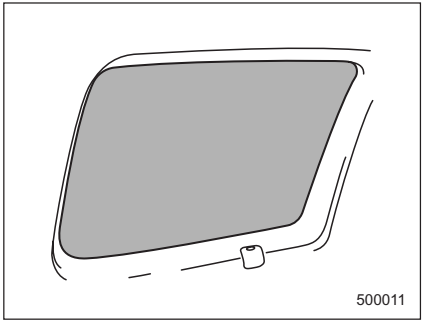

The antenna is printed on the inner surface of the left side rear quarter window glass.

⚠ CAUTION

Do not use sharp instruments or window cleaner containing abrasives to clean the inner surface of the window on which the antenna is printed. Doing so may damage the antenna printed on the window.

■ FM reception

Although FM is normally static free, reception can be affected by the surrounding area, atmospheric conditions, station strength and transmitter distance. Buildings or other obstructions may cause momentary static, flutter or station interference. If reception continues to be unsatisfactory, switch to a stronger station.

Installation of accessories

Always consult your SUBARU dealer before installing a citizen band radio or other transmitting device in your vehicle. Such devices may cause the electronic control system to malfunction if they are incorrectly installed or if they are not suited for the vehicle.

Audio set

Your SUBARU may be equipped with one of the following audio sets. See the pages indicated in this section for operating details.

■ Type A audio set

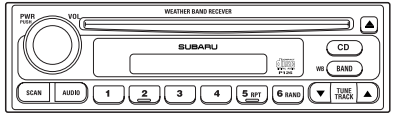

500214

- Radio operation: refer to page 5-4
- Compact disc player operation: refer to page 5-8
- CD changer control: refer to page 5-10

■ Type B audio set

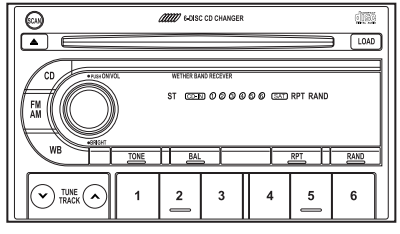

500215

- Radio operation: refer to page 5-12
- Built-in CD changer operation: refer to page 5-16

■ In-dash 6 CD auto changer (Optional audio unit – if equipped)

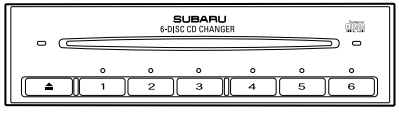

500216

- Inserting and removing a disc or all discs: refer to page 5-19

Type A audio set (if equipped)

The radio will operate only when the ignition switch is in the “ACC” or “ON” position.

■ Radio operation

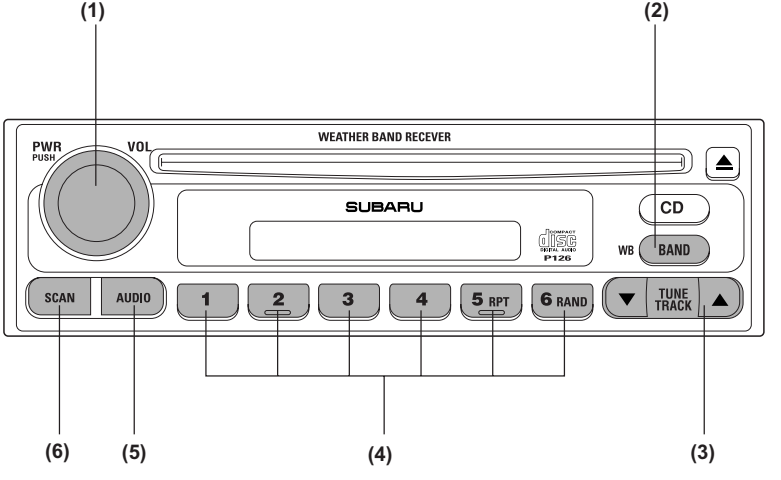

500217

(1) Power switch, Volume control, Tone/Fader/Balance control dial
(2) BAND button
(3) Tuning buttons
(4) Preset buttons
(5) AUDIO button
(6) SCAN button

▼ Power switch and volume/bass/treble/fader/balance control (PWR/VOL)

The dial (1) is used for both power (ON/OFF) and volume control. The radio is turned ON and OFF by pushing the dial and the volume is controlled by turning the dial.

▽ Tone and balance control

The “VOLUME” control knob normally function as volume control. This knob become a control for Treble, Bass, Fader or Balance when you select the appropriate audio mode.
Choose desired volume level for each mode by turning the “VOLUME” control knob. The control function returns to volume control mode after approximately 5 seconds.
To change control modes: Each brief press of the “AUDIO” button changes control modes in the following sequence starting from volume control mode. (When the

radio is first turned on, the control mode is in the volume control.)

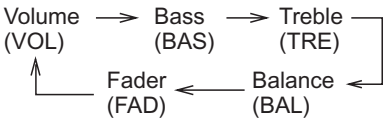

Display	Control mode	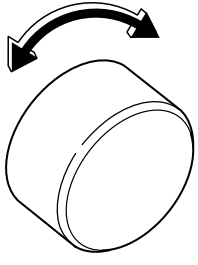 500009	
		Turn counterclockwise	Turn clockwise
VOL	Volume control	For less volume	For more volume
BAS	Bass control	For less bass sound	For more bass sound
TRE	Treble control	For less treble sound	For more treble sound
BAL	Balance control	To increase left speaker volume and decrease right speaker volume	To increase right speaker volume and decrease left speaker volume
FAD	Fader control	To increase rear speaker volume and decrease front speaker volume	To increase front speaker volume and decrease rear speaker volume

– CONTINUED –

▼ FM/AM/Weather band selection button (BAND)

Push the “BAND” button when the radio is on to select FM1, FM2, AM or Weather band (WB) reception. Each time this button is pressed, the band will change in the following order:

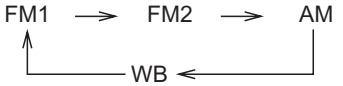

The display indicates which one is currently selected.

▼ Stereo indicator

The stereo indicator “ST” will come on when an FM stereo broadcast is received.

▼ Tuning (TUNE)

▽ Manual tuning (TUNE)

Push the “ ▲ ” side of the tuning button (3) to increase the tuning frequency and press the “ ▼ ” side of the button to decrease it.
Each time the button is pressed, the frequency changes 10 KHz in the AM waveband and 0.2 MHz in the FM waveband.

▽ Manual tuning for weather band

When weather band mode is selected, press the “ ▲ ” side of the tuning button (3) to change the WB channel up and press the “ ▼ ” side of the tuning button to change the WB channel down. Each time the button is pressed, the WB channel changes to the next channel.

▼ Seek tuning

If the tuning button (3) is pressed for longer than half of a second, the radio will begin to automatically search for receivable frequencies and will stop at the first one found. This function may not be available, however, when radio signals are weak. In such a situation, perform manual tuning to select the desired station.

▼ Automatic tuning (SCAN)

Press the “SCAN” button (6) to change the radio to the SCAN mode. In this mode, the radio scans through the radio band until a station is found. The radio will stop at the station for five seconds while displaying the frequency, after which scanning will continue until the entire band has been scanned from the low end to the high end.
Press the “SCAN” button again to cancel the SCAN mode and to stop on any displayed frequency.
When the “SCAN” button is pressed for automatic tuning, stations are scanned in the direction of low frequencies to high frequencies only.
Automatic tuning may not function properly if the station reception is weakened by distance from the station or proximity to tall buildings and hills.

▼ Selecting preset stations

Presetting a station with a preset button (4) allows you to select that station in a single operation. Up to six WB, AM, FM1 and FM2 stations each may be preset.

▼ How to preset stations

1. Press the “BAND” selection button to select AM, FM1, FM2 or WB reception.
2. Press the “SCAN” button (6) or tune the radio manually until the desired station frequency is displayed.
3. Press one of the preset buttons (4) for **at least 2 seconds** to store the frequency. At this time, there will momentarily be no sound from the radio. If the button is pressed for less than 2 seconds, the preceding selection will remain in memory.

NOTE

• If the connection between the radio and battery is broken for any reason such as vehicle maintenance or radio removal, all stations stored in the preset buttons are cleared. If this occurs, it is necessary to reset the preset buttons.

• If a cell phone is placed near the radio, it may cause the radio to emit

noise when it receives calls. This noise does not indicate a radio fault.

– CONTINUED –

■ Compact disc player operation

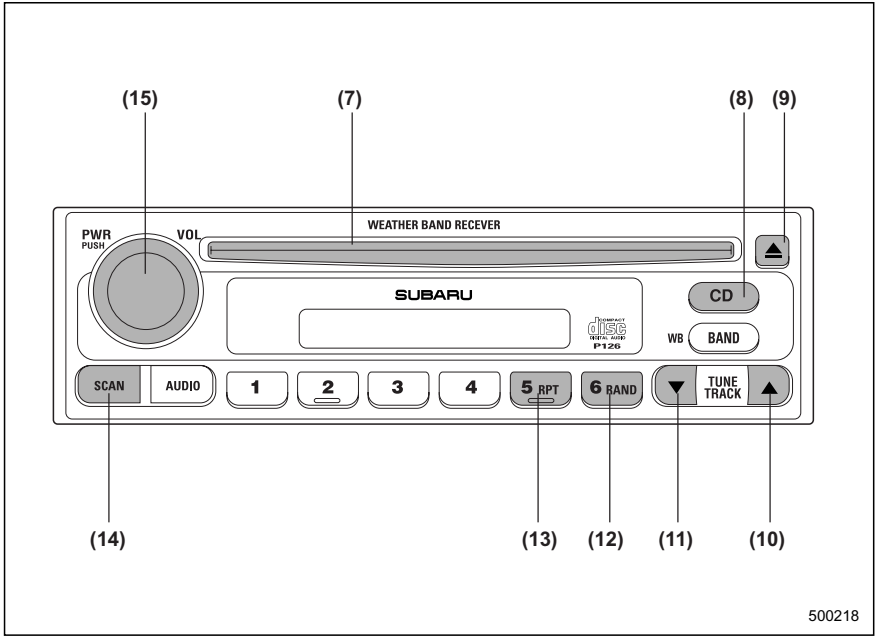

(7) Disc slot
(8) CD button
(9) Eject button
(10) Fast-forwarding and track up button
(11) Fast-reversing and track down button
(12) Random button
(13) Repeat button
(14) Scan button
(15) PWR (power) switch

▼ To play back a compact disc

▽ When CD is not in the player

Hold a disc with a finger in the center hole while gripping the edge of the disc, then insert it in to the slot (with the label side up) and the player will automatically pull the disc into position.
A single CD (8 cm/3 inch CD) may also be used without any adapter.

NOTE

• Make sure to always insert a disc with the label side up. If a disc is inserted with the label side down, it might be ejected or the player might shut off.
• After the last song finishes, the player will automatically return to track 1 (the first song on the disc).

▽ When CD is in the player

Press the “CD” button (8). The display will

show “CD-IN” and the player will start playback.

NOTE

After the last song finishes, playback will automatically return to track 1 (the first song on the disc).

▼ To stop playback of a CD

When the “PWR” button (15) is pressed during playback of a CD, the CD stops playing temporarily. To let the CD resume playing, press the button again.

▼ To select a song from its beginning

▽ Forward direction

Briefly press the “ ▲ ” side of the button (10) to skip to the beginning of the next track. Each time this side of the button is pressed, the indicated track number will increase.

▽ Backward direction

Briefly press the “ ▼ ” side of the button (11) to skip to the beginning of the current track. Each time this side of the button is pressed, the indicated track number will decrease.

▼ Fast-forwarding and fast-reversing

▽ Fast-forwarding

Press the “ ▲ ” side of the button (10) continuously to fast-forward the disc. Release the button to stop fast-forwarding.

▽ Fast-reversing

Press the “ ▼ ” side of the button (11) continuously to fast-reverse the disc. Release the button to stop fast-reversing.

▼ Repeat playback

Briefly press the “RPT” button (13) while a song is playing to play the song repeatedly. The “RPT” indicator will come on and the song will be played continuously. To cancel the repeat mode, press the button again. Then the “RPT” indicator goes out, and normal playback mode is restored.

▼ Random playback

Briefly press the “RAND” button (12) while a disc is being played back to play all songs on the disc in a random order. The “RAND” indicator will come on and all songs on the disc will be played in a random order.
To cancel the random mode, press the button again. Then the “RAND” indicator goes out, and normal playback mode is restored.

▼ Scan

Briefly press the “SCAN” button (14), and you can hear the first 10 seconds of each track to search for the desired program. To continue listening to the program, press the “SCAN” button again. After all tracks on the disc has been scanned, normal playback mode is restored.

▼ To eject a disc from the player

When a disc is being played back or when a disc is in the player, press the eject button “ ⏏ ” (9). The disc will be ejected.
The disc may be removed even when the ignition switch is in the “LOCK” position.

NOTE

Avoid driving the vehicle with a CD sticking out, because vibration might make it fall out.

– CONTINUED –

■ CD changer control (if optional in-dash CD changer is connected)

An optional CD changer can be connected to this audio unit. Consult the instructions that accompany the CD changer for operating the CD changer itself (e.g., how to load or unload CDs). See your SUBARU dealer for more information.

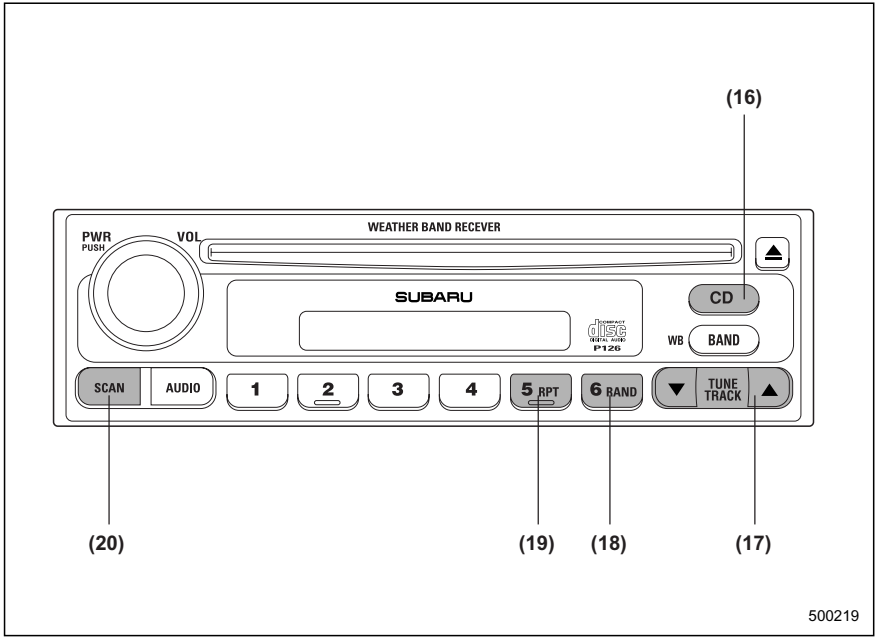

(16) CD button
(17) Track selection buttons
(18) RAND (Random) button
(19) RPT (Repeat) button
(20) SCAN button

▼ To start playback

When the “CD” button (16) is pressed, the CD changer will start playback. The display shows the current disc number, track number and the elapsed time during playback.

NOTE

• If a disc is in the player, the “DISC” button is used to change from CD player operation to DISC changer operation. Each time the “DISC” button is pressed, the operating mode will change alternately.
• At the end of the disc, the player automatically continues with the next disc.
• After playback on the last disc finishes, playback will automatically return to the first disc.
• If you have loaded fewer than 6 discs, any missing disc is automatically skipped.

▼ Selection of a desired disc

You can select a desired disc from among

the discs contained in the CD changer only by pressing the corresponding number on one of the disc select buttons. If you are to listen to the 5th disc in the CD changer, press the “5” button of the disc select buttons. All other discs in the CD changer can also be selected in a similar way.

NOTE

• No disc change takes place if the button corresponding to the storage tray in which no disc is loaded is pressed.
• If the disc select button corresponding to the disc now in playback is pressed again, the disc will be replayed from its beginning.

▼ To select a song from its beginning

▽ Forward direction

Briefly press the “ ▲ ” side of the button (17) to skip to the beginning of the next track. Each time this side of the button is pressed, the indicated track number will increase.

▽ Backward direction

Briefly press the “ ▼ ” side of the button (17) to skip to the beginning of the current track. Each time this side of the button is pressed, the indicated track number will decrease.

▼ Fast-forwarding and fast-reversing

▽ Fast-forwarding

Press the “ ▲ ” side of the button (17) continuously to fast-forward the disc.
Release the button to stop fast-forwarding.
If you continue fast-forwarding to the end of the disc, the CD changer will automatically stop fast-forwarding and start playback beginning with the first track on the current disc.

▽ Fast-reversing

Press the “ ▼ ” side of the button (17) continuously to fast-reverse the disc.
Release the button to stop fast-reversing.
If you continue fast-reversing to the beginning of the disc, the CD changer will automatically stop fast-reversing and start playback beginning with the first track on the current disc.

▼ Repeat playback

Press the “RPT” button (19) while a song is playing to play the song repeatedly. The “RPT” indicator will come on and the song will be played continuously. To cancel the repeat mode, press the button again. Then the “RPT” indicator goes out, and normal playback mode is restored.

▼ Random playback

Press the “RAND” button (18) while a disc is being played back to play all songs on the disc in a random order. The “RAND” indicator will come on and all songs on the disc will be played in a random order.
To cancel the random mode, press the button again. Then the “RAND” indicator goes out, and normal playback mode is restored.

▼ Scan (a convenient way to become familiar with a disc)

1. Press the “SCAN” button (20).
   – The display shows “SCAN” and the track number being scanned.
   – You hear the first 10 seconds of each track.
   – The operation is automatically cleared after playing all programs. Then, normal playback starts.
2. Press the “SCAN” button again when you hear a track you like.
   – Normal playback resumes.

▼ To stop playback

To stop playback and switch over to the radio mode, press the “BAND” button.

Type B audio set (if equipped)

The radio will operate only when the ignition switch is in the “ACC” or “ON” position.

■ Radio operation

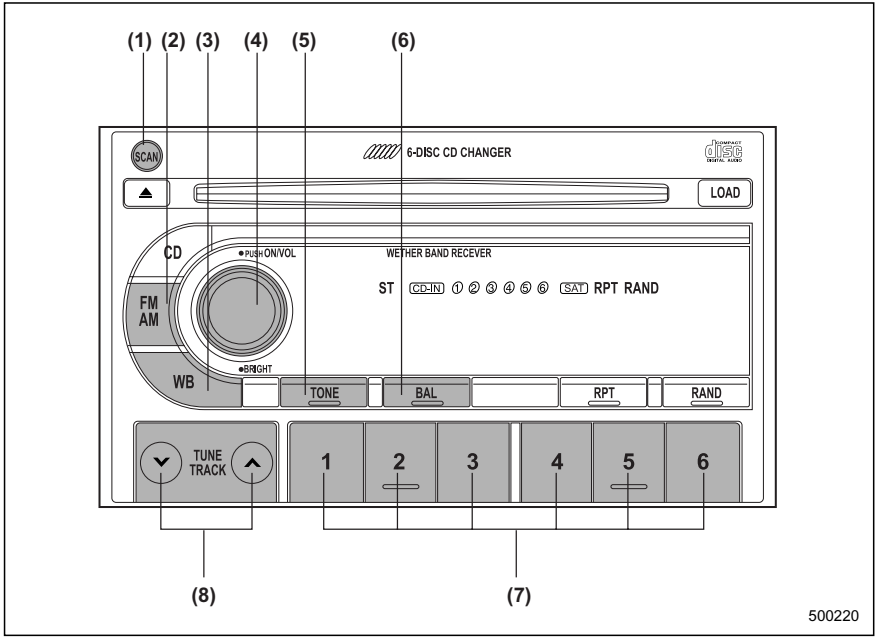

(1) SCAN button
(2) FM/AM selection button
(3) WB (weather band) button
(4) Power switch, Volume control, Bass/Midrange/Treble control and Fader/Balance control dial
(5) TONE button
(6) Fader/Balance selection button
(7) Preset buttons
(8) Tuning buttons

▼ Power switch and volume/bass/treble/fader/balance control (PWR/VOL)

The dial (4) is used for both power (ON/OFF) and volume control. The radio is turned ON and OFF by pushing the dial and the volume is controlled by turning the dial.

This dial is used for bass/midrange/treble controls when the “TONE” button (5) is in the depressed position. It is also used for fader/balance controls when the “BAL” button (6) is in the depressed position.

Display	Control mode	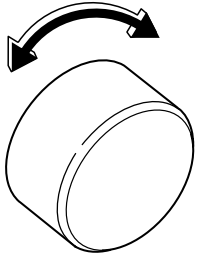 500009	
		Turn counterclockwise	Turn clockwise
BASS	Bass control	For less bass sound	For more bass sound
MIDDLE	Midrange control	For less midrange sound	For more midrange sound
TREBLE	Treble control	For less treble sound	For more treble sound
FADER	Fader control	To increase rear speaker volume and decrease front speaker volume	To increase front speaker volume and decrease rear speaker volume
BALANCE	Balance control	To increase left speaker volume and decrease right speaker volume	To increase right speaker volume and decrease left speaker volume
VOLUME	Volume control	For less volume	For more volume

▽ Tone control

The volume control dial (4) normally function as volume control. The dial become a control for Bass, Midrange or Treble when you select the appropriate tone control mode.

Choose desired setting for each mode by turning the volume control dial. The control function returns to volume control mode after approximately 5 seconds.

To change control modes: Each brief press of the “TONE” button (5) changes control modes in the following sequence

– CONTINUED –

starting from bass control mode. (When the radio is first turned on, the control mode is in the volume control.)

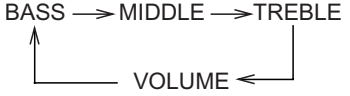

▽ **Fader and balance control**

The volume control dial (4) normally function as volume control. The dial become the controls for Fader or Balance when you select the appropriate fader and balance control mode.
Choose desired setting for each mode by turning the volume control dial. The control function returns to volume control mode after approximately 5 seconds.

To change control modes: Each brief press of the "BAL" button (6) changes control modes in the following sequence starting from fader control mode. (When the radio is turned on, the control mode is in the volume control.)

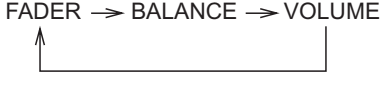

▽ **Display illumination dimness cancellation (BRIGHT)**

The brightness of the radio display dims when the light switch is in the " ≡DO≡ " or " ≡D " positions. If this makes the display difficult to read, press the volume dial for more than 1.5 seconds to return the display to original brightness.
Subsequently pressing the volume dial again for more than 1.5 seconds or if you can safely do so, turning the light switch to the OFF position and back to the " ≡DO≡ " or" ≡D " position makes the radio display dim again.

▼ **FM/AM selection button (FM/AM)**

Push the "FM/AM" button when the radio is on to select FM1, FM2 or AM reception. Each time this button is pressed, the band will change in the following order:

The display indicates which one is currently selected.

▼ **Stereo indicator**

The stereo indicator "ST" will come on when an FM stereo broadcast is received.

▼ **Weather band button (WB)**

Press the "WB" button when the radio is on to select the weather band.

▼ **Manual tuning (TUNE)**

▽ **Manual tuning for AM and FM waveband**

Push the " ∧ " side of the tuning button (8) to increase the tuning frequency and press the " ∨ " side of the button to decrease it.
Each time the button is pressed, the frequency changes 10 KHz in the AM waveband and 0.2 MHz in the FM waveband.

▽ **Manual tuning for weather band**

When weather band mode is selected, press the " ∧ " side of the tuning button (8) to change the WB channel up and press the " ∨ " side of the button to change the WB channel down. Each time the button is pressed, the WB channel changes to the next channel.

▼ **Seek tuning**

If the tuning button (8) is pressed for longer than half of a second, the radio will begin to automatically search for receivable frequencies and will stop at the first one found. This function may not be available, however, when radio signals are weak. In such a situation, perform manual tuning to

select the desired station.

▼ Automatic tuning (SCAN)

Press the “SCAN” button (1) to change the radio to the SCAN mode. In this mode, the radio scans through the radio band until a station is found. The radio will stop at the station for five seconds while displaying the frequency, after which scanning will continue until the entire band has been scanned from the low end to the high end.
Press the “SCAN” button again to cancel the SCAN mode and to stop on any displayed frequency.
When the “SCAN” button is pressed for automatic tuning, stations are scanned in the direction of low frequencies to high frequencies only.
Automatic tuning may not function properly if the station reception is weakened by distance from the station or proximity to tall buildings and hills.

▼ Selecting preset stations

Presetting a station with a preset button (7) allows you to select that station in a single operation. Up to six AM, FM1, FM2 and WB stations each may be preset.

▼ How to preset stations

1. Press the “FM/AM” selection button to select AM, FM1 or FM2 reception.

OR

Press the “WB” button (3) to select the weather band.

2. Press the “SCAN” button (1) or tune the radio manually until the desired station frequency is displayed.
3. Press one of the preset buttons (7) for **at least 1.5 seconds** to store the frequency. The frequency of the station will flash once on the display at this time.

NOTE

- **If the connection between the radio and battery is broken for any reason such as vehicle maintenance or radio removal, all stations stored in the preset buttons are cleared. If this occurs, it is necessary to reset the preset buttons.**
- **If a cell phone is placed near the radio, it may cause the radio to emit noise when it receives calls. This noise does not indicate a radio fault.**

– CONTINUED –

■ Built-in CD changer operation

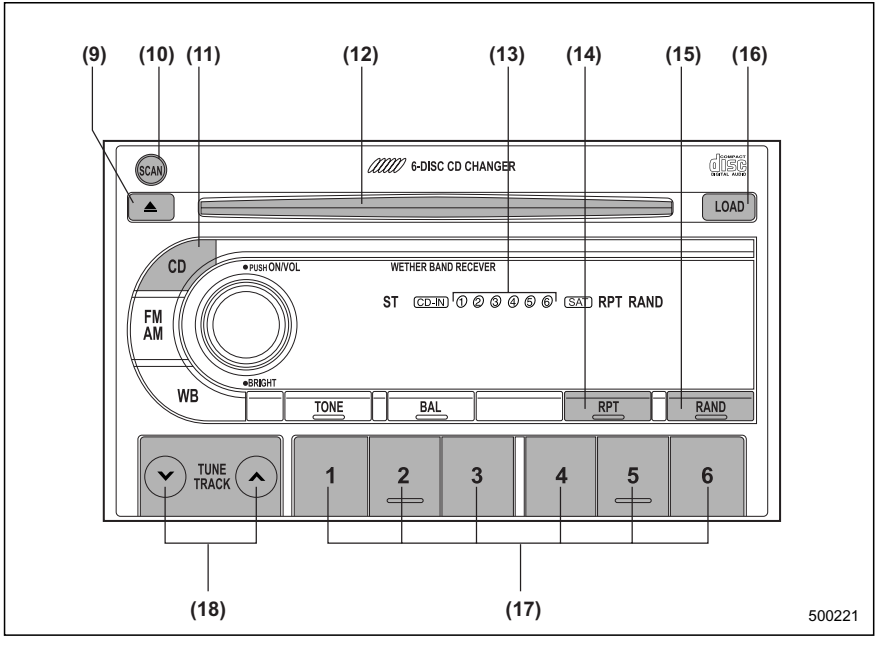

(9) Eject button
(10) SCAN button
(11) CD (CD player selection) button
(12) Disc slot
(13) DISC indicator
(14) Repeat button
(15) Random button
(16) LOAD button
(17) Disc select buttons
(18) Track selection buttons

NOTE

- **Make sure to always insert a disc with the label side up. If a disc is inserted with the label side down, it might be ejected or the player might shut off.**
- **Single CDs (i.e., 8 cm/3 inch CDs) are not supported, and if inserted, they will be immediately ejected.**
- **If a disc is inserted during a radio broadcast, the disc will interrupt the broadcast.**

▼ How to insert a CD(s)

▽ Inserting a CD

1. Press “LOAD” button (16). If the magazine in the player has an idle position where you can insert a disc, the “DISC” indicator (13) associated with the idle position will blink.
If no indicator blinks, it means that there is

no idle position in the magazine.
2. As soon as the “DISC” indicator (13) begins to blink, the “LOAD” will blink on display for a period of 15 seconds. Insert a disc during the period. The disc will be then automatically drawn in, and the player will begin to play back the first track of the disc.

• To insert more discs in succession, repeat Steps 1 and 2. The magazine will be loaded with discs in the ascending order of position number.
If you do not insert any disc in 15 seconds after you have pressed the “LOAD” button, the player will begin to play back the first track of the last disc you have inserted.
• The disc indicator steadily lights up if a disc is already inserted in the corresponding position of the magazine.
• While the player is in the loading mode, if you press the “FM/AM” selection button (2), the player will enter the standby mode. Press the “CD” button (11) to start playback.

▽ Inserting a disc in a desired position

1. Press the “LOAD” button (16). If the magazine in the player has an idle position where you can insert a disc, the “DISC” indicator (13) associated with the idle position will blink.
The positions in the magazine the indicator of which steadily lights up are already loaded with discs.
2. Press the disc select button (17) at the position where you want to insert a disc. The associated “DISC” indicator will blink, and then the “LOAD” will blink.
3. If you insert a disc during the 15-second period while the “LOAD” is on display, the disc will be automatically drawn in, and the player will start playback of the disc, beginning with the first track.

• To insert more discs in succession, repeat Steps 1 and 2.
• While the player is in the loading mode, if you press the “FM/AM” selection button (2), the player will enter standby mode. Press the “CD” button (11) to start playback.

▽ Loading all the magazine (Full disc loading mode)

1. If you continue to press the “LOAD” button (16) for more than 1.5 seconds, the player will produce beep sound and will enter the full disc loading mode.
2. A “DISC” indicator (13) will blink, and the “ALL LOAD” will be on display for a period of 15 seconds. If a disc is successfully loaded during this period, the “DISC” indicator will stop blinking and will steadily light.
3. When the loading of a disc is complete, the next “DISC” indicator will blink. Then repeat Step 2.
4. When the magazine is filled with discs by repeating Steps 2 and 3, the player will start playback of the discs, beginning with the one inserted first.
If you fail to insert any disc during each 15 seconds interval, the full disc loading mode will be canceled, and the player will start playback of the disc inserted first.

▼ How to play back a CD or make a pause

▽ When there is no CD inserted:

Insert a CD by referring to “How to insert a CD(s)”.
When a CD is loaded, the player will start playback of the CD, beginning with the first track.

▽ When there are CDs loaded:

Press a desired one of the disc select buttons (17) the “DISC” indicator (13) of which steadily lights up. The player will then start playback of the selected CD, beginning with the first track.

▼ To select a song from its beginning

▽ Forward direction

Briefly press the “ ∧ ” side of the button (18) to skip to the beginning of the next

– CONTINUED –

track. Each time the button is pressed, the indicated track number will increase.

▽ **Backward direction**

Briefly press the " ∨ " side of the button (18) to skip to the beginning of the current track. Each time the button is pressed, the indicated track number will decrease.

▼ **Fast-forwarding and fast-reversing**

▽ **Fast-forwarding**

Press the " ∧ " side of the button (18) continuously to fast-forward the disc.
Release the button to stop fast-forwarding.

▽ **Fast-reversing**

Press the " ∨ " side of the button (18) continuously to fast-reverse the disc.
Release the button to stop fast-reversing.

▼ **Repeat playback**

Press the "RPT" button (14) while a song is playing to play the song repeatedly. The "RPT" indicator will come on and the song will be played continuously. To cancel the repeat mode, press the button again. Then the "RPT" indicator goes out, and normal playback mode is restored.

▼ **Random playback**

Press the "RDM" button (15) while a disc is being played back to play all songs on the disc in a random order. The "RDM" indicator will come on and all songs on the disc will be played in a random order.
To cancel the random mode, press the button again. Then the "RDM" indicator goes out, and normal playback mode is restored.

▼ **Scan**

When the "SCAN" button (10) is pressed while the disc is being played back, you can hear the first 10 seconds of each track to search for the desired program. To continue listening to the program, press the "SCAN" button again. After all tracks on the disc have been scanned, normal playback mode is restored.

▼ **How to unload CDs from the player**

▽ **Ejecting a CD from the player**

Of the discs loaded, you can select and remove only one disc.
1. Press the disc select button (17) of the disc whose "DISC" indicator (13) is ON.
2. Press the eject button (9). Then the "DISC" indicator associated with the disc you have selected will blink, and the disc will be ejected.
To remove more discs in succession, repeat Steps 1 and 2.
If you press the eject button after turning OFF the ignition switch, only one disc will be ejected.

▽ **Ejecting all discs from the player (All disc ejection mode)**

1. If you continue to press the eject button (9), the player will produce beep sound and will enter the all disc ejection mode.
2. Remove the disc that has been ejected. The other discs loaded will then be ejected one after another. If you do not remove the ejected disc within 15 seconds, the "All disc ejection mode" will be canceled.

NOTE

Avoid driving the vehicle with a CD sticking out, because vibration might make it fall out.

⚠ CAUTION

Do not attempt to insert two or more discs into the slot at a time. Doing so can cause mechanical damage to the CD changer.

In-dash 6 CD auto changer (if equipped)

■ Loading and unloading compact discs

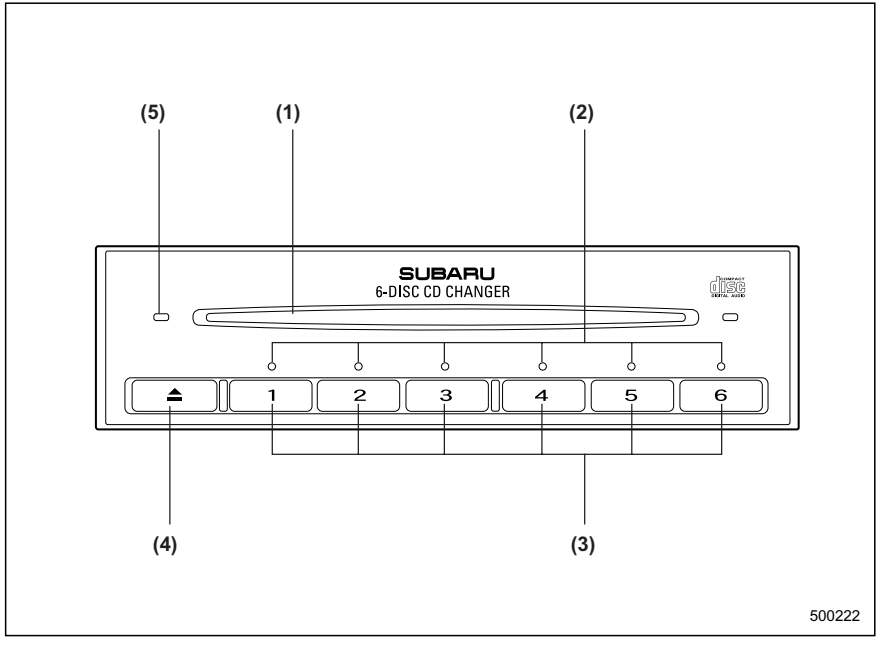

(1) Disc slot
(2) Disc indicators (disc No.1 to 6)
(3) Disc select buttons (disc No.1 to 6)
(4) Eject button
(5) Disc slot indicator

– CONTINUED –

⚠ CAUTION

- **Do not attempt to insert two or more discs into the slot at a time. Doing so can cause mechanical damage to the CD changer.**
- **Use only music CDs identified by a COMPACT disc DIGITAL AUDIO mark.**
- **Do not use CDs listed in the following which could cause damage to the CD player.**
  - **3 inch (8 cm) compact disc.**
  - **Any disc with a peel-off or seal on it.**
  - **Bent disc.**
  - **Cleaning disc.**
  - **CD accessory. (E.g., 3 inch (8 cm) disc adapter)**
- **Do not insert or remove any disc when the automatic transmission selector lever is in the park position; the selector lever in that position can interfere with disc insertion or removal, causing scratches on the disc surface (for AT vehicles).**

▼ To insert a disc

1. Press one of the disc select buttons (3) (numbered from 1 to 6) for which the disc indicator light (2) is “OFF”.
The disc indicator lights are located directly above the corresponding disc select buttons.
2. The indicator will begin blinking. The blinking will last for 15 seconds.
During this period, insert a desired disc, and the disc will begin to play. (If any disc is not inserted during this period, the “Disc slot” (1) door will close. Repeat Step 1.)
Be sure to hold a disc with the label side (the side where titles are printed) up.
3. To insert another disc, repeat Steps 1 and 2 choosing a different disc select button.

▼ To insert six discs at a time

1. Press and hold the disc select button number 1 until all disc indicators begin blinking (approximately 1.5 seconds).
2. The indicators will blink for 15 seconds. During this period, insert desired six discs.
3. When all discs are loaded, the first disc will begin to play. (If no disc is inserted within this 15 seconds, the entire disc load sequence will be canceled.)

▼ To remove a disc

1. Press the desired one of the disc select buttons (3) (numbered from 1 to 6) for which the disc indicator light is on.
2. Press the eject button (4). The selected disc will be ejected and the indicator light will begin blinking.
3. To remove another disc, repeat Steps 1 and 2 choosing a different disc select button.
(To remove discs when the ignition switch is in the “Lock” position, press the eject button, and the first disc will be ejected. Press the eject button again, and the next disc will be ejected and so on. At this time, the disc select buttons are disabled.)

▼ To remove all discs at one time

1. Press and hold the eject button (4) until all “Disc” indicators begin blinking (approximately 1.5 seconds), and the first disc will be ejected.
2. When the disc is removed, the next one will be ejected, and so on.

▼ To replace a playing disc with another

Simply press the desired one of disc select buttons (3) (numbered from 1 to 6) or press the disc select button on the radio unit to select the desired disc, and the disc will begin to play.

▼ Disc indicators

Lit: when the corresponding storage tray is occupied by a disc.
Blinking: Disc player is either in loading, eject or changing mode.

OFF: No disc is loaded or the ignition switch is in the “LOCK” position.

▽ **Open/Closed disc slot indicator**

When the disc slot is open, the disc indicators on both sides of the slot illuminate.

▼ **Function control**

Refer to CD changer control operating instructions described in the “Type A audio set (if equipped)” section.

Precautions to observe when handling a compact disc

Use only compact discs (CDs) that have the mark shown in the following illustration.

500033

You may also use compact discs (CD-Rs and CD-RWs) that have the following marks, but you may not use some discs if they were produced using writing methods not compatible with your vehicle’s audio system.

500010

500253

- You cannot use a DualDisc in the CD player. If you insert a DualDisc into the player, the disc may not come out again, possibly causing the player to malfunction.
- In cold and/or rainy weather, dew can

– CONTINUED –

form inside the CD player, preventing normal operation. If this happens, eject the CD and wait for the player to dry out.

- Skipping may occur when the CD player is subjected to severe vibration (for example, when the vehicle is driven on a rough surface).
- To remove a disc from the case, press the center of the case and hold both edges of the disc. If the disc surface is touched directly, contamination could cause poor tone quality. Do not touch the disc surface.
- Use a clean disc whenever possible. If there are deposits, wipe the disc surface from the center outward with a dry, soft cloth. Be sure not to use a hard cloth, thinner, benzene, alcohol, etc.
- Do not use any disc that is scratched, deformed, or cracked. Also, do not use any disc that has a non-standard shape (for example, a heart shape). Malfunctions or problems might result.
- A disc is vulnerable to heat. Never keep it either in places exposed to direct sunlight, near heaters or in vehicles parked in the sun or on hot days.

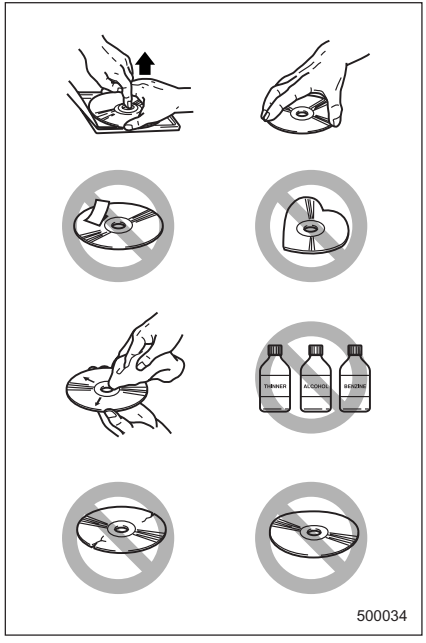

Interior lights 6-2
Dome light 6-2
Cargo area light 6-2
Map lights 6-3
Sun visors 6-3
Vanity mirror 6-3
Storage compartments 6-4
Glove box 6-4
Center console 6-4
Overhead console 6-6
Dashboard storage compartment 6-6
Convenience net 6-6
Cup holders 6-7
Front passenger's cup holder 6-7
Rear passenger's cup holder 6-7
Accessory power outlets 6-8
Cigarette lighter socket 6-9
Use with a cigarette lighter (if equipped) 6-10
Using as an accessory power outlet 6-10
Ashtray 6-11
Floor mat 6-11
Coat hook 6-12
Cargo area cover (if equipped) 6-12
Using the cover 6-12
To remove the cover 6-13
Stowage of the cover 6-13
To install the cover housing 6-13
Shopping bag hook 6-13
Cargo tie-down hooks 6-14
Cargo area bars 6-14
Under-floor storage compartment 6-14

Interior lights

When leaving your vehicle, make sure the light goes out to avoid battery discharge.

■ Dome light

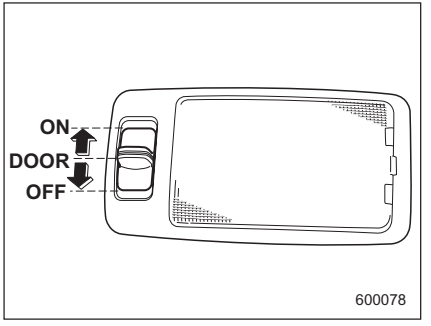

The dome light switch has three positions:

ON: The light stays on continuously.
DOOR (middle position): The dome light comes on when any of the doors or the rear gate is opened. The light remains on for several seconds and gradually goes out after all doors and the rear gate are closed.

NOTE

If a door or the rear gate is left open, the light flashes and a chime sounds about 30 minutes later and then the light is turned off automatically.

The light also can be turned on by use of the keyless entry transmitter. See the “Remote keyless entry system” section in chapter 2 for detailed information.
OFF: The light stays off.

■ Cargo area light

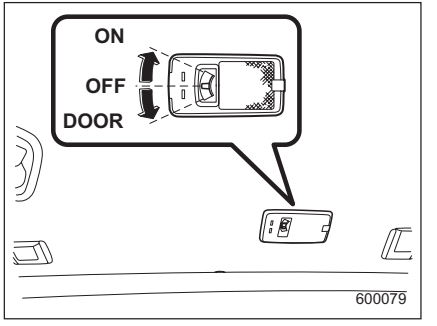

The cargo area light switch has three positions:

ON: The light stays on continuously.
OFF: The light stays off.
DOOR: The light comes on only when the rear gate is opened.

NOTE

If a door or the rear gate is left open, the light flashes and a chime sounds about 30 minutes later and then the light is turned off automatically.

The light also can be turned on by use of the keyless entry transmitter. See the “Remote keyless entry system” section in chapter 2 for detailed information.

Map lights

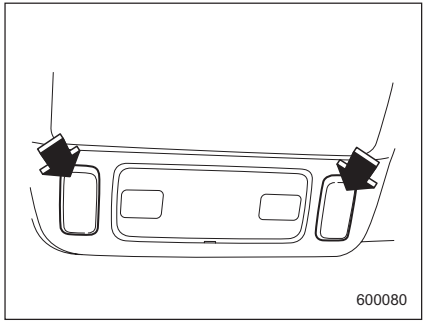

To turn on the map light, push the switch. To turn it off, push the switch again.

When leaving the vehicle, make sure the light is turned off to avoid battery discharge.

Sun visors

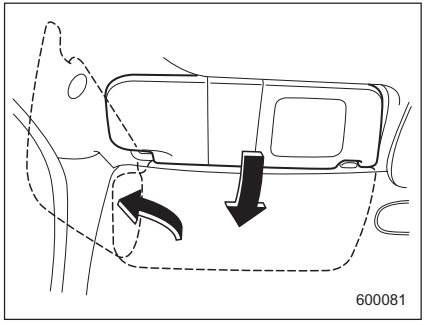

To block out glare, swing down the visors. To use the sun visor at a side window, swing it down and move it sideways.

■ Vanity mirror

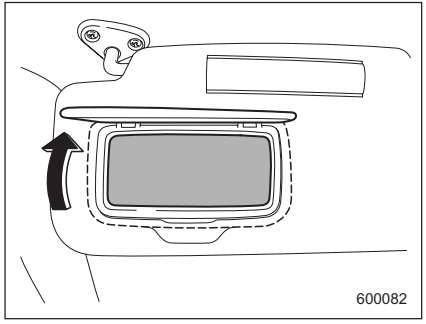

To use the vanity mirror, swing down the sun visor and open the vanity mirror cover.

Storage compartments

CAUTION

- **Always keep the storage compartment closed while driving to reduce the risk of injury in the event of sudden stops or an accident.**
- **Do not store spray cans, containers with flammable or corrosive liquids or any other dangerous items in the storage compartment.**

■ Glove box

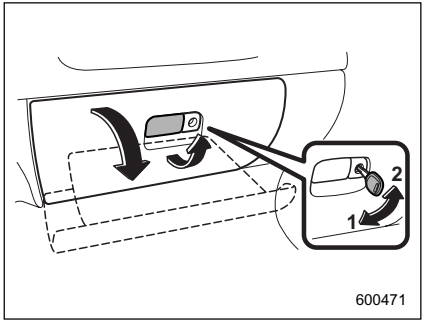

1) Lock
2) Unlock

To open the glove box, pull the handle. To close it, push the lid firmly upward.

To lock the glove box, insert the key and turn it clockwise.

■ Center console

The center console box provides a storage space. In addition, the top of the console can be used as an armrest and as a rear passenger's cup holder.

To use as armrest:

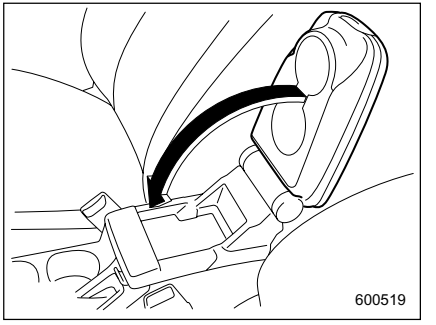

1. Tip the console top forward from its vertical position.

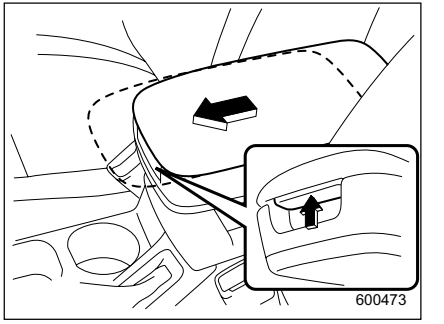

2. Push the armrest part of the console top forward to the desired position while pulling up the knob at the front end of the armrest and lock it in position by releasing the knob. Adjust the position of the armrest to suit your driving position. Make sure the armrest is securely retained.
When you slide the armrest back to its original position, pull the knob upward as you do so.
To return the console top to the vertical position, pull upward the knob at the front end of the armrest while raising the console top until it emits a click.

⚠ CAUTION

Do not step or sit on the armrest, and do not place heavy objects on it. The armrest could break, and you could get hurt.

To use as rear passenger's cup holder:

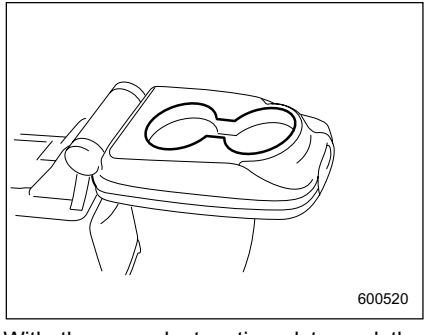

With the console top tipped toward the rear seat, it can be used as a cup holder.

⚠ CAUTION

- **To switch from using the console top as an armrest to using it as a rear passenger's cup holder, raise the console top to the vertical position before tipping it toward the rear seat. Otherwise the console top may break.**
- **Do not place any object weighing more than 4.4 lbs (2 kg) on the table.**
- **Do not have hot drinks or other objects on the table while driving. During hard braking or negotiation of a curve, they could fall from the table and cause a burn or other injury.**

To use as storage space:

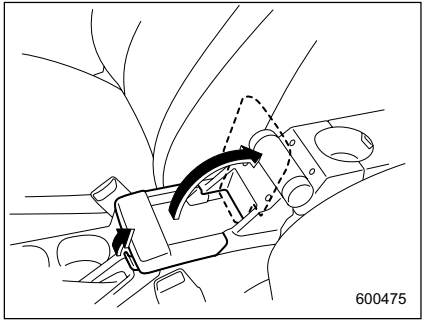

Raise the console top to the vertical position or tip it toward the rear seat. Then, pull up the lock button of the console box and open the lid.
When closed, the lid can be used as a tray for placing small items in it.

⚠ CAUTION

- **Before opening the lid of the console box, raise the console top completely to the vertical position or tip it toward the rear seat. Otherwise, the lid may be damaged and an injury may occur.**

– CONTINUED –

- **Be careful not to trap your hands between the console top and console box when raising and tipping the console top.**
- **When there is an object on the console box lid, do not tip the console top forward. Otherwise, the console top or lid could be damaged, and an injury could occur.**

■ Overhead console

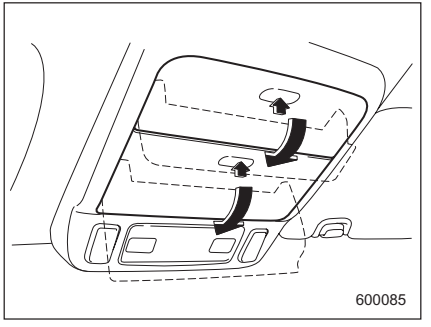

To open the console, push on the console lid lightly and the lid will automatically open.

⚠ CAUTION

When your vehicle is in the sun or on a warm day, the inside of the overhead console heats up. Avoid storing plastic or other heat-vulnerable or flammable articles such as a lighter in the overhead console.

■ Dashboard storage compartment

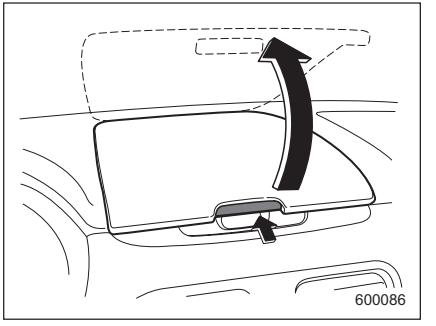

To open the dashboard compartment, push the button on the lid and the lid will automatically open. Be sure to close the compartment fully before driving.

⚠ CAUTION

When your vehicle is in the sun or on a warm day, the inside of the overhead console heats up. Avoid storing plastic or other heat-vulnerable or flammable articles such as a lighter in the overhead console.

■ Convenience net

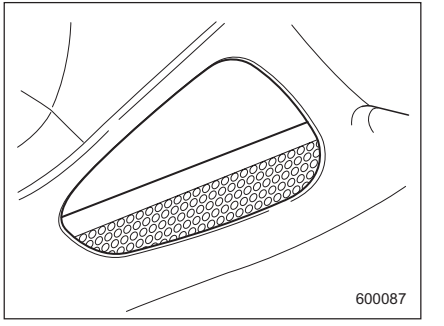

A net for storing small articles is provided at the front passenger's foot-well.

Cup holders

⚠ CAUTION

- **When not in use, always keep the cup holder stored while driving to reduce the risk of injury in the event of a sudden stop or an accident.**
- **Do not pick up a cup from the cup holder or put a cup in the holder while you are driving, as this may distract you and lead to an accident.**
- **Take care to avoid spills. Beverages, if hot, might burn you or your passengers. Spilled beverages may also damage upholstery or carpets.**

■ Front passenger's cup holder

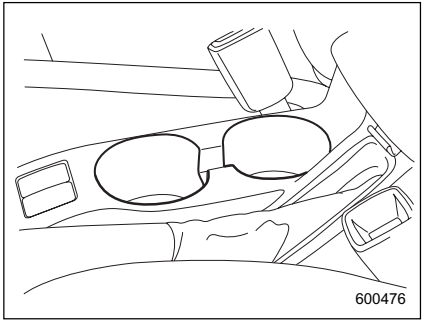

A dual cup holder is built in the center console, beside the parking brake lever.

■ Rear passenger's cup holder

There are rear passenger's cup holders at the back of the center console as well as on the reverse side of the console top.

To use rear passenger's cup holder at back of center console:

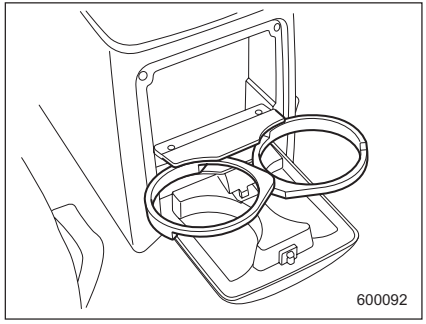

To use the cup holder, open the lid by pulling its upper edge.

To use rear passengers' cup holder on the reverse side of console top:
For the method of use, refer to "Center console" in the "Storage compartments" part of this chapter.

Accessory power outlets

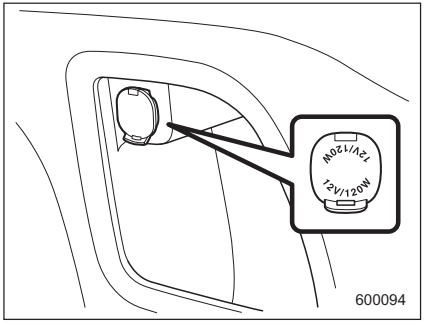

Power outlet in cargo area

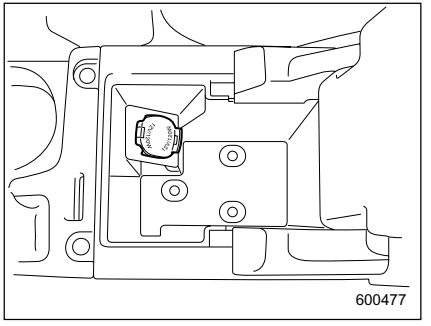

Power outlet on center console

Accessory power outlets are provided in the center console and in the cargo area.
Electrical power (12V DC) from the battery is available at any of outlets when the ignition switch is either in the “ACC” or “ON” position.
You can use an in-car use electrical appliance by connecting it to an outlet.
When both outlets are used at the same time, the total power consumption of the electric appliances must be 120W or less.

CAUTION

- **Do not attempt to use a cigarette lighter in the accessory power outlet.**
- **Do not place any foreign objects, especially metal ones such as coins or aluminum foil, into the accessory power outlet. That could cause a short circuit. Always put the cap on the accessory power outlet when it is not in use.**
- **Use only electrical appliances which are designed for 12V DC and which consume less than 120W. Overloading the accessory power outlet can cause a short circuit. Do not use double adapters or more than one electrical appliance.**
- **If the plug on your electric appliance is either too loose or too tight for the accessory power outlet, this can result in a poor contact or cause the plug to get stuck. Only use plugs that fit properly.**
- **Use of an electric appliance in the accessory power outlet for a long period of time while the engine is not running can cause battery discharge.**
- **Before driving your vehicle, make sure that the plug and the cord on your electrical appliance will not interfere with your shifting gears and operating the accelerator and brake pedals. If they do, do not use the electrical appliance while driving.**

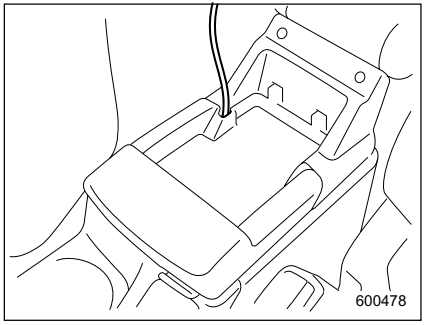

NOTE

When the lid of the center console is closed, an opening remains between the center console and the lid to allow the power outlet in the center console to be used. Pass the electrical appliance's cord through this opening.

Cigarette lighter socket

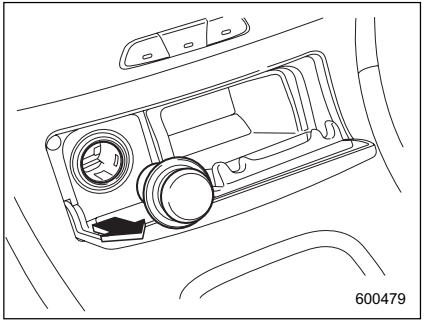

A cigarette lighter socket can be found behind the ashtray lid under the climate controls. Push gently on the lid to open it. A cigarette lighter plug is an optional accessory. It is available from your SUBARU dealer.

The cigarette lighter socket may also be used as a power source for an in-car use electrical appliance.

⚠ CAUTION

- **The electrical power socket located on the lower part of the instrument panel is originally designed to use a genuine SUBARU cigarette lighter plug. Do not use non-genuine cigarette lighter plugs in the socket. Doing so may cause a short-circuit and overheating, resulting in a fire.**
- **If the socket is ever used for a plug-in accessory such as a cell phone, that may damage the portion of the socket's internal mechanism that causes a cigarette lighter plug to "pop out" after its lighter element is heated. Therefore, do not place a cigarette lighter plug in a socket that has been used, even once, to power a plug-in accessory. Doing so may cause the plug to stick and overheat, creating a potential fire hazard.**
- **Do not place any foreign objects, especially metal ones such as coins or aluminum foil, into the socket. That could cause a short circuit.**

– CONTINUED –

■ Use with a cigarette lighter (if equipped)

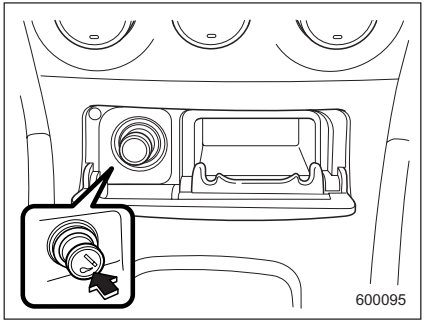

The cigarette lighter operates only when the ignition switch is in the “ON” and “ACC” positions.
To use the cigarette lighter, push in the knob and wait a few moments. It will automatically spring up when ready for use.

⚠ WARNING

To avoid being burned, never grasp the lighter by the end with the heating element. Doing so could result in injury and could also damage the heating element.

⚠ CAUTION

Do not hold the lighter pushed in, because it will overheat.

■ Using as an accessory power outlet

Electrical power (12V DC) from the battery is available at the socket when the ignition switch is either in the “ACC” or “ON” position.
If you use the socket as an accessory power outlet, take the following precautions.
When the socket is not in use, always put the cap on the socket to prevent any foreign object from entering it.

⚠ CAUTION

- **Use only in-car use electrical appliances which are designed for 12V DC and which consume less than 120W. Overloading the socket can cause a short circuit. Do not use double adapters or more than one electrical appliance.**
- **If the plug on your electric appliance is either too loose or too tight for the socket, this can result in a poor contact or cause the plug to get stuck. Only use plugs that fit properly.**
- **Use of an electric appliance in the socket for a long period of time while the engine is not running can cause battery discharge.**
- **Before driving your vehicle, make sure that the plug and the cord on your electrical appliance will not interfere with your shifting gears and operating the accelerator and brake pedals. If they do, do not use the electrical appliance while driving.**

If the socket has been used for electrical appliances, damage may have been done to the internal mechanism that causes a cigarette lighter to “pop out” after its element has been heated. For that reason, a cigarette lighter, even if it is a genuine part, should not be used in the socket. If you want to use the socket for a cigarette lighter again, or to protect your purchaser before you sell your vehicle, have your SUBARU dealer replace the socket with a new one.

Ashtray

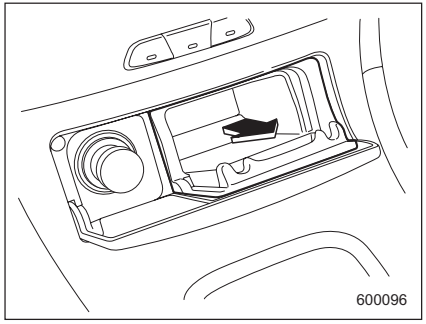

To open the ashtray, push lightly on the lid below the climate controls.
Fully close the lid after using it to help reduce residual smoke.
To remove the ashtray for cleaning, hold the right and left sides of the ashtray and pull it out.

NOTE

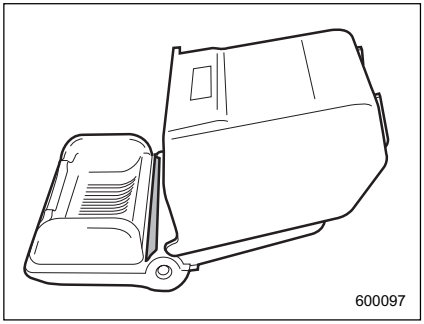

Particles of ash and tobacco will accumulate around the hinges of the ashtray's inner lid. Clean them off using a toothbrush or other narrow-ended implement.

⚠ CAUTION

Do not use ashtrays as waste receptacles or leave a lighted cigarette in an ashtray. This could cause a fire.

Floor mat

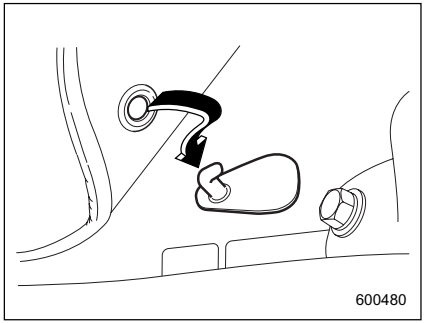

A retaining pin is located on the driver's side of the vehicle next to the fuel filler door release.
The floor mat is secured using the built-in grommet, by placing the grommet over the pin and pushing downward.

– CONTINUED –

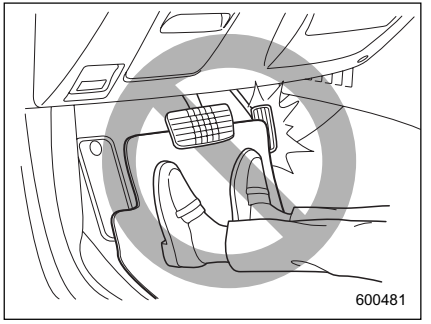

⚠ CAUTION

Make sure the driver's floor mat is placed back in its proper location and correctly secured on its retaining pin. If the floor mat slips forward and interferes with the movement of the pedals during driving, it could cause an accident.

Coat hook

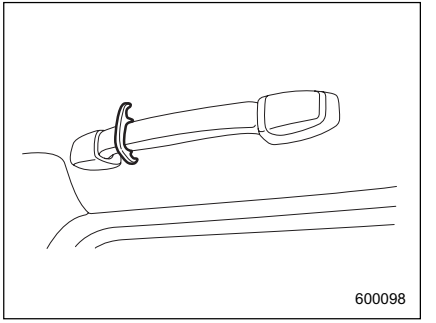

The coat hook is attached to the rear left passenger's hand grip.

⚠ CAUTION

Never hang anything on the coat hook that might obstruct the driver's view or that could cause injury in sudden stops or in a collision. And do not hang items on the coat hook that weigh 2.2 lbs (1 kg) or more.

Cargo area cover (if equipped)

The cargo area cover is provided for covering the cargo area and to protect its contents from direct sunlight. This cover is detachable to make room for additional cargo.

■ Using the cover

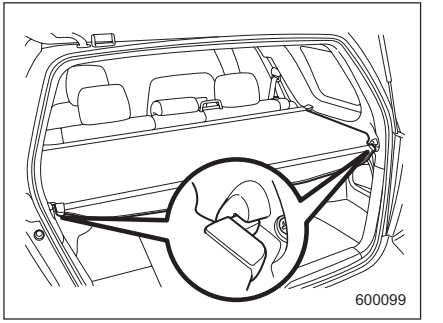

To extend the cover, pull the end of the cover out of the housing, then insert its hooks into the catches as shown. To rewind it, unhook it from the catches and it will rewind automatically. You should hold on to the cover and guide it back into the cover housing while it is rewinding.

⚠ WARNING

Do not place anything on the extended cover. Putting excessive weight on the extended cover can break it and an object on the cover could tumble forward in the event of a sudden stop or collision. This could cause serious injury.

■ To remove the cover

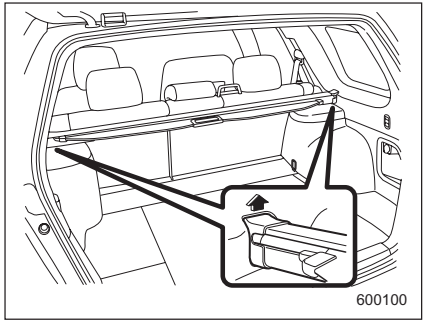

1. Rewind the cover.
2. Take it off the retainer, lift it out.
3. Store the cover housing in the cargo area.

■ Stowage of the cover

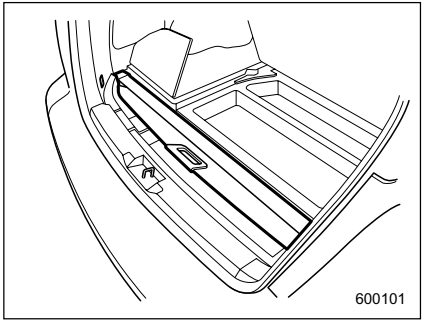

On models having a temporary spare tire, the cargo area cover can be stowed in under the cargo floor.

■ To install the cover housing

To install the cover, insert both ends of the cover housing into the retainers.

Shopping bag hook

In the cargo area, there are two retractable shopping bag hooks (one on each side) and four non-retractable shopping bag hooks (two on each side).

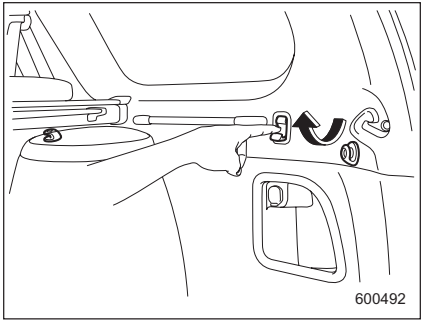

To use either of the retractable hooks, pull the lower portion out.

⚠ CAUTION

Do not hang items on the shopping bag hook that weigh 6.6 lbs (3 kg) or more.

Cargo tie-down hooks

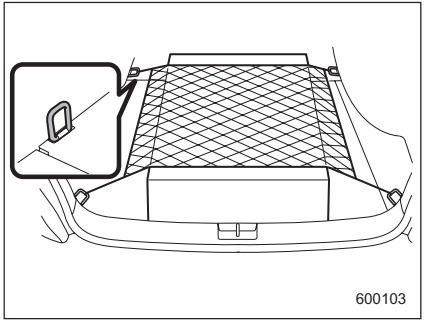

The cargo area is equipped with four tie-down hooks so that cargo can be secured with a cargo net or ropes.
When using the hooks, raise them. When not in use, lower the hooks.

⚠ CAUTION

The cargo tie-down hooks are designed only for securing light cargo. Never try to secure cargo that exceeds the capacity of the hooks. The maximum load capacity is 44 lbs (20 kg) per a hook.

Cargo area bars

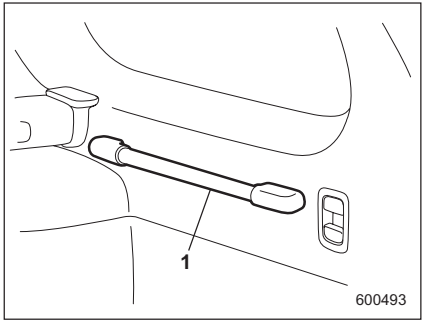

1) Cargo area bar

In the cargo area, there are two bars (one on each side) to which a net can be attached.

⚠ CAUTION

Do not place objects with a total weight exceeding 6.6 lbs (3 kg) on a net attached to the cargo area bars.

Under-floor storage compartment

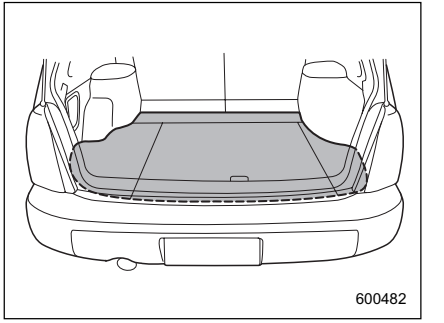

There are four trays in the storage compartment underneath the floor of the cargo area. They can be used to store small items.

⚠ CAUTION

- **Always keep the lids closed while driving to reduce the risk of injury in the event of sudden stop or an accident.**
- **Do not store spray cans, containers with flammable or corrosive liquids or any other dangerous items in the storage compartment.**

▼ **Front, left and right side storage compartment**

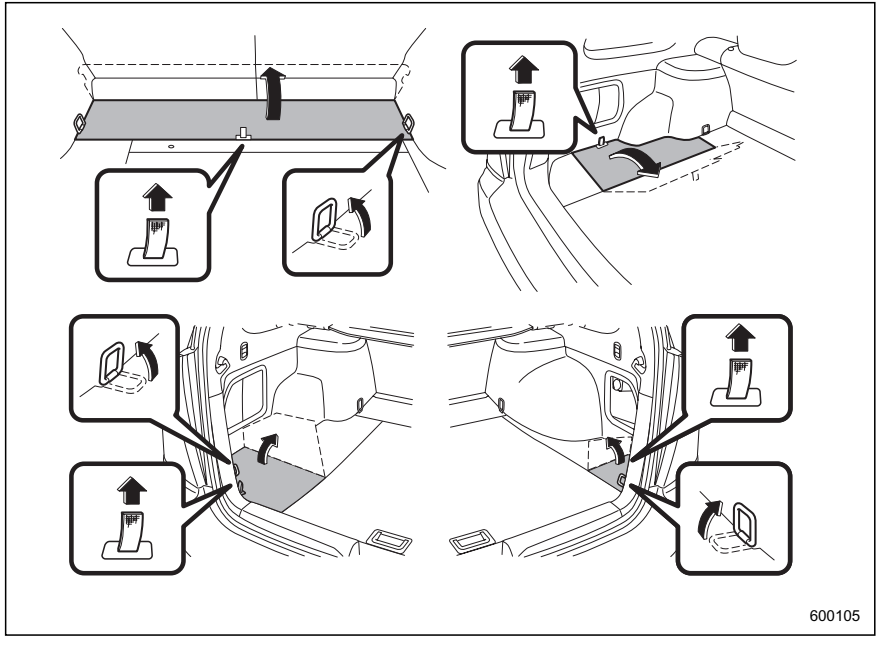

To open the lid, raise the cargo tie-down hooks and pull the tab up. The jack and jack handle are stored in the left side storage compartment.

▼ **Center storage compartment (Storage bucket)**

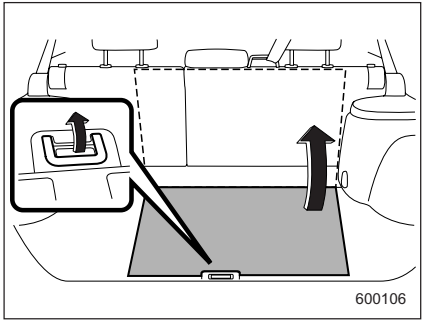

To open the lid, pull the handle up.

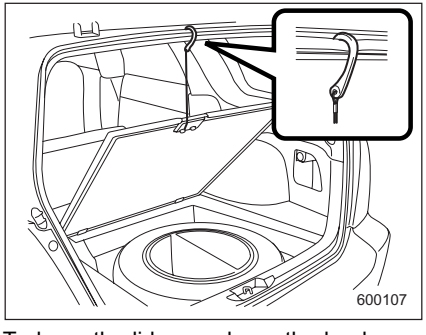

To keep the lid open, hang the hook provided on the backside of the lid on the rear

– CONTINUED –

edge of the roof.

Canada-spec. non-turbo models:
The storage bucket is put on the spare tire.
Except Canada-spec. non-turbo models:
Storage tray is placed on the spare tire.

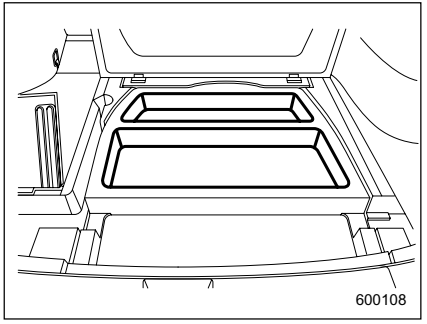

NOTE

When storing a flat tire, put the storage tray in the luggage compartment (Except Canada-spec. non-turbo models).

Fuel 7-2
Fuel requirements 7-2
Fuel filler lid and cap 7-3
State emission testing (U.S. only) 7-5
Preparing to drive 7-6
Starting the engine 7-7
Manual transmission vehicle 7-7
Automatic transmission vehicle 7-7
Stopping the engine 7-8
Manual transmission 7-9
Shifting speeds 7-9
Driving tips 7-10
Automatic transmission 7-10
Selector lever for automatic transmission 7-11
Shift lock release 7-14
Rear viscous limited slip differential (LSD) (if equipped) 7-14
Power steering 7-15
Braking 7-15
Braking tips 7-15
Brake system 7-15
Disc brake pad wear warning indicators 7-16
ABS (Anti-lock Brake System) 7-16
ABS system self-check 7-16
ABS warning light 7-17
Electronic Brake Force Distribution (EBD) system (if equipped) 7-18
Steps to take if EBD system fails 7-18
Vehicle Dynamics Control system (if equipped) 7-19
Vehicle Dynamics Control system monitor 7-21
Vehicle Dynamics Control OFF switch 7-23
Parking your vehicle 7-24
Parking brake 7-24
Parking tips 7-24
Hill holder (Manual transmission – if equipped) 7-25
Cruise control 7-26
To set cruise control 7-26
To temporarily cancel the cruise control 7-27
To turn off the cruise control 7-27
To change the cruising speed 7-28
Self-leveling rear suspension (if equipped) 7-29

Fuel

⚠ CAUTION

Use of a fuel which is low in quality or use of an inappropriate fuel additive may cause engine damage.

■ Fuel requirements

▼ Non-turbo models

The 2.5-liter non-turbo engine is designed to operate using unleaded gasoline with an octane rating of 87 AKI or higher.

▼ Turbo models

The 2.5-liter turbo engine is designed to operate using premium unleaded gasoline with an octane rating of 91 AKI or higher. If premium unleaded gasoline is not available, regular unleaded gasoline with an octane rating of 87 AKI or higher may be temporarily used. For optimum engine performance and driveability, it is required that you use premium grade unleaded gasoline.

NOTE

Be sure to use premium unleaded gasoline of 91 AKI or higher for a 2.5-liter turbo engine model. If other gasoline (lower than 91 AKI) is used, knocking, reduced output and poor accelerator response will result.

▼ Fuel octane rating

This octane rating is the average of the Research Octane and Motor Octane numbers and is commonly referred to as the Anti Knock Index (AKI).
Using a gasoline with a lower octane rating can cause persistent and heavy knocking, which can damage the engine. Do not be concerned if your vehicle sometimes knocks lightly when you drive up a hill or when you accelerate. See your dealer or a qualified service technician if you use a fuel with the specified octane rating and your vehicle knocks heavily or persistently.

▼ Unleaded gasoline

The neck of the fuel filler pipe is designed to accept only an unleaded gasoline filler nozzle. Under no circumstances should leaded gasoline be used because it will damage the emission control system and may impair driveability and fuel economy.

▼ Gasoline for California-certified LEV

Your vehicle was certified to California's low emission vehicle (LEV) standards as indicated on the underhood tune-up label, it is designed to optimize engine and emission performance with gasoline that meets the clean burning low-sulfur California gasoline specifications. If you live in any other state than California, your vehicle will operate on gasoline meeting Federal specifications. Gasoline sold outside California is permitted to have higher sulfur levels, which may affect the performance of your vehicle's catalytic converter and may produce a sulfur exhaust odor or smell. SUBARU recommends that you try a different brand of unleaded gasoline having lower sulfur to determine if the problem is fuel related before returning your vehicle to an authorized dealer for service.

▼ MMT

Some gasoline contains an octane-enhancing additive called MMT (Methylcyclopentadienyl Manganese Tricarbonyl). If you use such fuels, your emission control system performance may deteriorate and the CHECK ENGINE warning light/Malfunction indicator lamp may turn on. If this happens, return to your authorized SUBARU Dealer for service. If it is determined that the condition is caused by the type of fuel used, repairs may not be covered by your warranty.

▼ Gasoline for cleaner air

Your use of gasoline with detergent additives will help prevent deposits from form-

ing in your engine and fuel system. This helps keep your engine in tune and your emission control system working properly, and is a way of doing your part for cleaner air. If you continuously use a high quality fuel with the proper detergent and other additives, you should never need to add any fuel system cleaning agents to your fuel tank.

Many gasolines are now blended with materials called oxygenates. Use of these fuels can also help keep the air cleaner. Oxygenated blend fuels, such as MTBE (Methyl Tertiary Butyl ether) or ethanol (ethyl or grain alcohol) may be used in your vehicle, but should contain no more than 15% MTBE or 10% ethanol for the proper operation of your SUBARU.

In addition, some gasoline suppliers are now producing reformulated gasolines, which are designed to reduce vehicle emissions. SUBARU approves the use of reformulated gasoline.

If you are not sure what the fuel contains, you should ask your service station operators if their gasolines contain detergents and oxygenates and if they have been reformulated to reduce vehicle emissions.

As additional guidance, only use fuels suited for your vehicle as explained in the following.

- Fuel should be unleaded and have an octane rating no lower than that specified in this manual.
- Methanol (methyl or wood alcohol) is sometimes mixed with unleaded gasoline. Methanol can be used in your vehicle **ONLY** if it does not exceed 5% of the fuel mixture **AND** if it is accompanied by sufficient quantities of the proper cosolvents and corrosion inhibitors required to prevent damage to the fuel system. Do not use fuel containing methanol **EXCEPT** under these conditions.
- If undesirable driveability problems are experienced and you suspect they may be fuel related, try a different brand of gasoline before seeking service at your SUBARU dealer.
- Fuel system damage or driveability problems which result from the use of improper fuel are not covered under the SUBARU Limited Warranty.

⚠ CAUTION

Do not let fuel spill on the exterior surfaces of the vehicle. Fuels containing alcohol may cause paint damage, which is not covered under the SUBARU Limited Warranty.

■ Fuel filler lid and cap

▼ Refueling

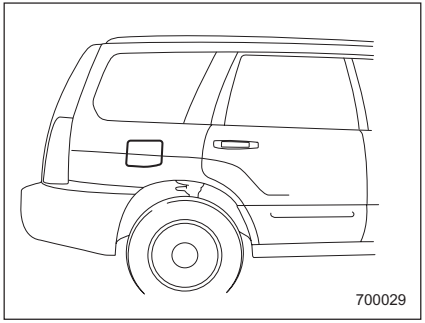

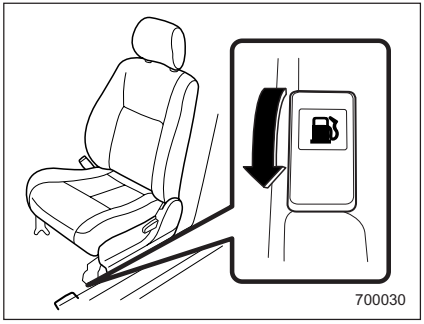

1. To open the fuel filler lid, pull the lid release lever. The lever is on the floor at the left of the driver's seat.

– CONTINUED –

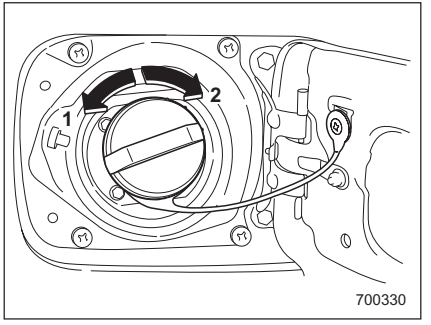

1) Open
2) Close

2. Remove the fuel filler cap by turning it slowly counterclockwise.

WARNING

- **Gasoline vapor is highly flammable. Before refueling, always first stop the engine and make sure that there are no lighted cigarettes, open flames or electrical sparks in the adjacent area.**
- **When opening the cap, do not remove the cap quickly. Fuel may be under pressure and spray out of the fuel filler neck especially in hot weather, which may cause injury.**

3. Stop filling the tank after the fuel filler pump automatically stops. Do not add any more fuel.
4. Put the cap back on, turn it clockwise until you hear a clicking noise. Be certain not to catch the tether under the cap while tightening.
5. Close the fuel filler lid completely.

If you spill any fuel on the painted surface, rinse it off immediately. Otherwise, the painted surface could be damaged.

NOTE

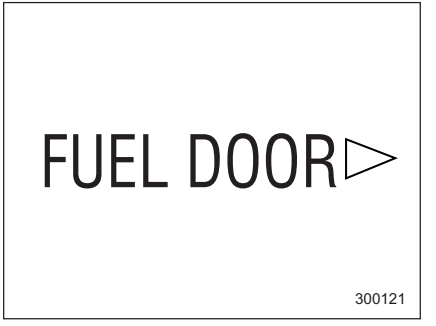

- **You will see the " FUEL DOOR▷ " sign in the fuel gauge. This indicates that the fuel filler door (lid) is located on the right side of the vehicle.**
- **If the fuel filler cap is not tightened until it clicks or if the tether is caught under the cap, the CHECK ENGINE warning light may come on. Refer to the "Warning and indicator lights" section located in chapter 3.**

(Turbo model only) Promptly put fuel in the tank whenever the low fuel warning light comes on. Engine misfires as a result of an empty tank could cause damage to the engine.

CAUTION

- **Never add any cleaning agents to the fuel tank. The addition of a cleaning agent may cause damage to the fuel system.**
- **Make sure that the cap is tightened until it clicks to prevent fuel spillage in the event of an accident.**
- **Do not let fuel spill on the exterior surfaces of the vehicle. Fuels may cause paint damage, which is not covered under the SUBARU Limited Warranty.**

- **Always use a genuine SUBARU fuel filler cap. If you use the wrong cap, it may not fit or have proper venting, and your fuel tank and emission control system might be damaged.**

State emission testing (U.S. only)

At state inspection time, remember to tell your inspection or service station in advance not to place your SUBARU AWD vehicle on a two-wheel dynamometer. Otherwise, serious transmission damage will result.

Some states have started using dynamometers in their state inspection programs in order to meet their obligation under federal law to implement stricter vehicle emission standards to reduce air pollution from cars. A dynamometer is a treadmill or roller-like testing device that allows your vehicle's wheels to turn while the vehicle remains in one place. Depending on the severity of a state's air pollution problems, the states must adopt either a "basic" or "enhanced" vehicle emission inspection test. Normally, a portion of the basic emission test consists of an emission inspector inserting an analyzer probe into the exhaust pipe of an idling vehicle for a short period of time. States with more severe air pollution problems are required to adopt an enhanced vehicle emission test. This test simulates actual driving conditions on a dynamometer and permits more accurate measurement of tailpipe emitted pollution than the basic emission test.

The U.S. Environmental Protection Agency (EPA) and states using two-wheel dynamometers in their emission testing programs have **EXEMPTED** SUBARU AWD vehicles from the portion of the testing program that involves a two-wheel dynamometer.

There are some states that use four-wheel dynamometers in their testing programs. When properly used, that equipment will not damage an AWD SUBARU vehicle.

Under no circumstances should the rear wheels be jacked off the ground, nor should the driveshaft be disconnected for state emission testing.

WARNING

Testing of an All-Wheel Drive vehicle must NEVER be performed on a single two-wheel dynamometer. Attempting to do so will result in uncontrolled vehicle movement and may cause an accident or injuries to persons nearby.

– CONTINUED –

⚠ CAUTION

Resultant vehicle damage due to improper testing is not covered under the SUBARU Limited Warranty and is the responsibility of the state inspection program or its contractors or licensees.

The EPA has issued regulations for inspecting the On-Board Diagnostic (OBD) system as part of the state emissions inspection. The OBD system is designed to detect engine and transmission problems that might cause vehicle emissions to exceed allowable limits. These inspections apply to all 1996 model year and newer passenger cars and light trucks. Over 30 states plus the District of Columbia have implemented the OBD system inspection.

- The inspection of the OBD system consists of a visual operational check of the **"CHECK ENGINE"**warning light/malfunction indicator lamp (MIL) and an examination of the OBD system with an electronic scan tool while the engine is running
- A vehicle passes the OBD system inspection if proper the **"CHECK ENGINE"** warning light/MIL illumination is observed, there is **no** stored diagnostic trouble codes, and the OBD system readiness monitors are complete.
- A vehicle fails the OBD inspection if the **"CHECK ENGINE"** warning light/MIL is not properly operating or there is one or more diagnostic trouble codes stored in vehicle's computer with the **"CHECK ENGINE"** warning light/MIL illuminated.
- A state emission inspection may reject (not pass or fail) a vehicle if the number of OBD system readiness monitors **"Not Ready"** is greater than one. Under this condition, the vehicle operator should be instructed to drive his/her vehicle for a few days to set the monitors and return for an emission re-inspection.
- Owners of rejected or failing vehicles should contact their SUBARU Dealer for service.

Preparing to drive

You should perform the following checks and adjustments every day before you start driving.

1. Check that all windows, mirrors, and lights are clean and unobstructed.
2. Check the appearance and condition of the tires. Also check tires for proper inflation.
3. Look under the vehicle for any sign of leaks.
4. Check that the hood and rear gate are fully closed.
5. Check the adjustment of the seat.
6. Check the adjustment of the inside and outside mirrors.
7. Fasten your seatbelt. Check that your passengers have fastened their seatbelts.
8. Check the operation of the warning and indicator lights when the ignition switch is turned to the "ON" position.
9. Check the gauges, indicator and warning lights after starting the engine.

NOTE

Engine oil, engine coolant, brake fluid, washer fluid and other fluid levels should be checked daily, weekly or at fuel stops.

Starting the engine

⚠ CAUTION

Do not operate the starter motor continuously for more than ten seconds. If the engine fails to start after operating the starter for five to ten seconds, wait for ten seconds or more before trying again.

■ Manual transmission vehicle

1. Apply the parking brake.
2. Turn off unnecessary lights and accessories.
3. Press the clutch pedal to the floor and shift the shift lever into neutral. Hold the clutch pedal to the floor while starting the engine.
The starter motor will only operate when the clutch pedal is pressed fully to the floor.
4. Turn the ignition switch to the “ON” position and check the operation of the warning and indicator lights. Refer to the “Warning and indicator lights” section (chapter 3).
5. Turn the ignition switch to the “START” position **without** depressing the accelerator pedal. Release the key immediately after the engine has started.

If the engine does not start, try the following.

1) Turn the ignition switch to the “OFF” position and wait for at least 10 seconds. After checking that the parking brake is firmly set, turn the ignition switch to the “START” position while depressing the accelerator pedal slightly (about a quarter of the full stroke). Release the accelerator pedal as soon as the engine starts.
2) If this fails to start the engine, turn the ignition switch back to the “OFF” position and wait for at least 10 seconds. Then fully depress the accelerator pedal and turn the ignition switch to the “START” position. If the engine starts, quickly release the accelerator pedal.
3) If this fails to start the engine, turn the ignition switch again to the “OFF” position. After waiting for 10 seconds or longer, turn the ignition switch to the “START” position without depressing the accelerator pedal.
4) If the engine still refuses to start, contact your nearest SUBARU dealer for assistance.

6. Confirm that all warning and indicator lights have gone off after the engine has started. The fuel injection system automatically lowers the idle speed as the engine warms up.

NOTE

The engine may be difficult to start when the battery has been disconnected and reconnected (for maintenance or other purposes). This difficulty is caused by the electronically controlled throttle’s self-diagnosis function. To overcome it, keep the ignition switch in the “ON” position for approximately 10 seconds before starting the engine.

■ Automatic transmission vehicle

1. Apply the parking brake.
2. Turn off unnecessary lights and accessories.
3. Shift the selector lever to the “P” or “N” position (preferably “P” position).
The starter motor will only operate when the select lever is at the “P” or “N” position.
4. Turn the ignition switch to the “ON” position and check the operation of the warning and indicator lights. Refer to the “Warning and indicator lights” section (chapter 3).
5. Turn the ignition switch to the “START” position **without** depressing the accelerator pedal. Release the key immediately after the engine has started.

If the engine does not start, try the following.

– CONTINUED –

1) Turn the ignition switch to the “OFF” position and wait for at least 10 seconds. After checking that the parking brake is firmly set, turn the ignition switch to the “START” position while depressing the accelerator pedal slightly (about a quarter of the full stroke). Release the accelerator pedal as soon as the engine starts.
2) If this fails to start the engine, turn the ignition switch back to the “OFF” position and wait for at least 10 seconds. Then fully depress the accelerator pedal and turn the ignition switch to the “START” position. If the engine starts, quickly release the accelerator pedal.
3) If this fails to start the engine, turn the ignition switch again to the “OFF” position. After waiting for 10 seconds or longer, turn the ignition switch to the “START” position without depressing the accelerator pedal.
4) If the engine still refuses to start, contact your nearest SUBARU dealer for assistance.

6. Confirm that all warning and indicator lights have gone out after the engine has started. The fuel injection system automatically lowers the idle speed as the engine warms up.

While the engine is warming up, make sure that the selector lever is at the “P” or “N” position and that the parking brake is applied.

NOTE

The engine may be difficult to start when the battery has been disconnected and reconnected (for maintenance or other purposes). This difficulty is caused by the electronically controlled throttle’s self-diagnosis function. To overcome it, keep the ignition switch in the “ON” position for approximately 10 seconds before starting the engine.

CAUTION

If you restart the engine while the vehicle is moving, shift the selector lever into the “N” position. Do not attempt to place the selector lever of a moving vehicle into the “P” position.

Stopping the engine

The ignition switch should be turned off only when the vehicle is stopped and the engine is idling.

WARNING

Do not stop the engine when the vehicle is moving. This will cause loss of power to the power steering and the brake booster, making steering and braking more difficult. It could also result in accidental activation of the “LOCK” position on the ignition switch, causing the steering wheel to lock.

Manual transmission

The manual transmission is a fully synchromeshed, 5-forward-speed and 1-reverse-speed transmission.

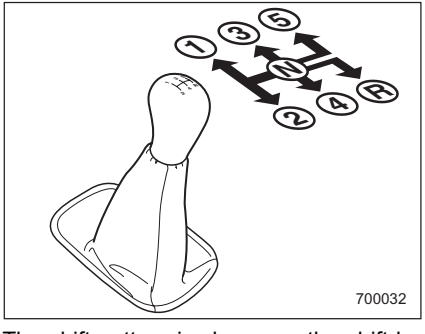

The shift pattern is shown on the shift lever knob. When shifting from 5th gear to reverse gear, first return the shift lever to the neutral position then shift into reverse gear.

To change gears, fully depress the clutch pedal, move the shift lever, and gradually let up on the clutch pedal.
If it is difficult to shift into gear, put the transmission in neutral, release the clutch pedal momentarily, and then try again.

⚠ WARNING

Do not drive the vehicle with the clutch disengaged (i.e., when the clutch pedal is depressed) or with the shift lever in the neutral position. Engine braking has no effect in either of these conditions and the risk of an accident is consequently increased.

⚠ CAUTION

Shift into reverse ONLY when the vehicle has completely stopped. It may cause damage to the transmission to try shifting into reverse when the vehicle is moving.

■ Shifting speeds

▼ Recommended shifting speeds

The best compromise between fuel economy and vehicle performance during normal driving is ensured by shifting up at the speeds listed in the following table.

Shift up	mph (km/h)
1st to 2nd	15 (24)
2nd to 3rd	25 (40)
3rd to 4th	40 (65)
4th to 5th	45 (73)

▼ Maximum allowable speeds

The following table shows the maximum speeds that are possible with each different gear.

Never exceed the speed limit below for each gear position except for brief acceleration in an emergency. The tachometer's needle will enter the red area if these speeds are exceeded. Failure to observe this precaution can lead to excessive engine wear and poor fuel economy.

– CONTINUED –

mph (km/h)

	Non-turbo models	Turbo models
1st	30 (49)	28 (46)
2nd	51 (82)	52 (83)
3rd	73 (117)	73 (118)

WARNING

When shifting down a gear, ensure that the vehicle is not traveling at a speed exceeding the Maximum Allowable Speed for the gear which is about to be selected. Failure to observe this precaution can lead to engine over-revving and this in turn can result in engine damage.

In addition, sudden application of engine brakes when the vehicle is travelling on a slippery surface can lead to wheel locking; as a consequence, control of the vehicle may be lost and the risk of an accident increased.

■ Driving tips

Do not drive with your foot resting on the clutch pedal and do not use the clutch to hold your vehicle at a standstill on an upgrade. Either of those actions may cause clutch damage.
Do not drive with your hand resting on the shift lever. This may cause wear on the transmission components.

When it is necessary to reduce vehicle speed due to slow traffic, turning corners, or driving up steep hills, downshift to a lower gear before the engine starts to labor.

On steep downgrades, downshift the transmission to 4th, 3rd or 2nd gear as necessary; this helps to maintain a safe speed and to extend brake pad life.
In this way, the engine provides a braking effect. Remember, if you “ride” (over use) the brakes while descending a hill, they may overheat and not work properly.

Automatic transmission

The automatic transmission is electronically controlled and provides 4 forward speeds and 1 reverse speed.

NOTE

• When the engine coolant temperature is still low, your vehicle’s automatic transmission will up-shift at higher engine speeds than when the coolant temperature is sufficiently high in order to shorten the warm-up time and improve driveability. The gearshift timing will automatically shift to the normal timing after the engine has warmed up.
• Immediately after ATF (automatic transmission fluid) is replaced, you may feel that the automatic transmission operation is somewhat unusual. This results from invalidation of data the on-board computer has collected and stored in memory to allow the transmission to shift at the most appropriate times for the current condition of your vehicle. Optimized shifting will be restored as the vehicle continues to be driven for a while.

⚠ WARNING

Do not shift from the "P" or "N" position into the "D", "3", "2", "1" or "R" position while depressing the accelerator pedal. This may cause the vehicle to jump forward or backward.

⚠ CAUTION

- **Shift into the "P" or "R" position only after the vehicle is completely stopped. Shifting while the vehicle is moving may cause damage to the transmission.**
- **Do not race the engine for more than five seconds in any position except the "N" or "P" position when the brake is set or when chocks are used in the wheels. This may cause the automatic transmission fluid to overheat.**
- **Avoid shifting from one of the forward driving positions into the "R" position or vice versa until the vehicle has completely stopped. Such shifting may cause damage to the transmission.**
- **When parking the vehicle, first securely apply the parking brake and then place the selector lever in the "P" position.**

■ Selector lever for automatic transmission

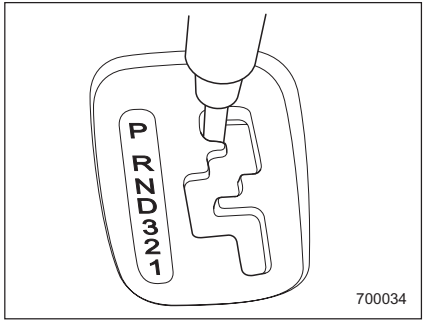

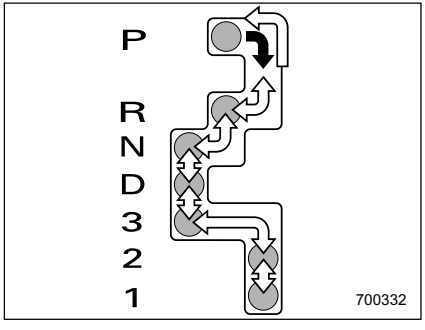

➡ : With the brake pedal depressed, move the lever along the gate.
⇨ : Move the lever along the gate.

The selector lever has seven positions.

▼ P (Park)

This position is for parking the vehicle and starting the engine.

In this position, the transmission is mechanically locked to prevent the vehicle from rolling freely.

When you park the vehicle, first set the parking brake fully, then shift into the "P" position. Do not hold the vehicle with only the transmission.

A shift interlock function is employed in the automatic transmission system to en-

– CONTINUED –

sure safe starting of the vehicle.
To shift the selector lever from the “P” to the any other position, you have to depress the brake pedal fully when the ignition switch is in the “ON” position. This prevents the vehicle from lurching when it is started.

If the shift lever does not move from the “P” position with the brake pedal depressed, refer to the “Shift lock release” section in this chapter.

▼ R (Reverse)

This position is for backing the vehicle.

To shift from the “N” to “R” position, first stop the vehicle completely then move the lever to the “R” position.

▼ N (Neutral)

This position is for restarting a stalled engine.
In this position the wheels and transmission are not locked. In this position, the transmission is neutral; the vehicle will roll freely, even on the slightest incline unless the parking brake or foot brake is on.
Avoid coasting with the transmission neutral.
During coasting, there is no engine braking effect.

NOTE

If you stop the engine with the selector lever in the “N” position, move the selector lever to the “P” position immediately. Otherwise, you may find that the selector lever soon cannot be moved to the “P” position. If you find that the selector lever cannot be moved from the “N” position to the “P” position, turn the ignition switch to the “ON” position and try again.

⚠ WARNING

Do not drive the vehicle with the selector lever in the “N” (neutral) position. Engine braking has no effect in this condition and the risk of an accident is consequently increased.

▼ D (Drive)

This position is for normal driving.
The transmission automatically shifts into a suitable gear from 1st to 4th according to the vehicle speed and the acceleration you require.

When more acceleration is required in this position, press the accelerator pedal fully to the floor and hold that position. The transmission will automatically downshift to 3rd, 2nd or 1st gear. When you release the pedal, the transmission will return to the original gear position.

▽ While climbing a grade

When driving up hill, undesired upshift to 4th gear is prevented from taking place when the accelerator pedal is released. This minimizes the chances of subsequent downshifting to a lower gear when accelerating again. This prevents repeated upshifting and downshifting resulting in a smoother operation of the vehicle.

NOTE

The transmission may downshift to 2nd or 1st gear, depending on the way the accelerator pedal is pressed to accelerate the vehicle again.

▽ While going down a hill

When descending a steep hill, depressing the brake pedal will cause the transmission to downshift to 3rd gear, thus applying engine braking. Reacceleration for a short time will cause the transmission to upshift normally.

NOTE

In some cases, depressing the brake pedal on a downhill grade does not result in an automatic downshift to 3rd gear. This can happen when the automatic transmission fluid temperature is very low, for example, during driving

shortly after the vehicle has been parked for an extended period of time. When the ATF temperature has risen to a certain level, automatic downshift normally takes place. In the meantime, downshift manually for engine braking as required.
Also, downshifting when braking downhill will not occur at speeds above approximately 48 mph (78 km/h).

▼ 3 (Third)

This position is for using engine braking when going down a hill or for climbing a grade.
The transmission automatically shifts into a suitable gear from 1st to 3rd according to the vehicle speed and the acceleration you require.

When more acceleration is required in this position, press the accelerator pedal fully to the floor and hold that position. The transmission will automatically downshift to 2nd or 1st gear. When you release the pedal, the transmission will return to the original gear position.

▼ 2 (Second)

This position is for using engine braking when going down a hill or for climbing a steep grade.
In this position, the transmission holds in the 2nd gear.

Use this position when starting off from a standstill on slippery road surfaces such as mud or snow. It will ensure greater traction.

▼ 1 (First)

This position is for driving up or down very steep grades, or driving through mud or sand, or on slippery surfaces. In this position, the transmission holds in the 1st gear.

▼ Maximum speeds

The following tables show the maximum speeds that are possible with each different gear.

When shifting down a gear, it is important to confirm that the current vehicle speed is not in excess of the Maximum Allowable Speed of the gear which is about to be selected.

mph (km/h)

	Non-turbo models	Turbo models
1st	28 (45)	28 (45)
2nd	63 (100)	65 (104)
3rd	98 (156)	104 (167)

NOTE

In order to prevent over-revving during deceleration of the vehicle, the transmission will remain in the current gear if the speed of the vehicle is in excess of the Maximum Allowable Speed for the gear to which the selector lever has been moved.

⚠ WARNING

When shifting down a gear, ensure that the vehicle is not travelling at a speed exceeding the Maximum Allowable Speed for the gear which is about to be selected. Failure to observe this precaution can lead to engine over-revving and this in turn can result in engine damage.

In addition, sudden application of engine brakes when the vehicle is travelling on a slippery surface can lead to wheel locking; as a consequence, control of the vehicle may be lost and the risk of an accident increased.

▼ Driving tips

- Always apply the foot or parking brake when the vehicle is stopped in the “D”, “3”, “2”, “1” or “R” position.
- Always set the parking brake when

– CONTINUED –

parking your vehicle. Do not hold the vehicle with only the transmission.

- Do not keep the vehicle in a stationary position on an uphill grade by using the “D”, “3”, “2”, or “1” position. Use the brake instead.

■ Shift lock release

If the selector lever does not move from the “P” position with the brake pedal depressed and the ignition switch in the “ON” position, perform the following steps:

To override the shift lock:

1. Set the parking brake and stop the engine.
2. Take out the screwdriver.
3. Remove the cover by prying on the edge with the screwdriver.

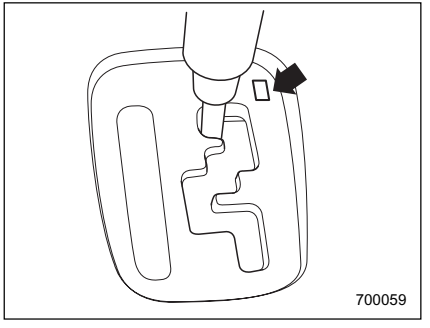

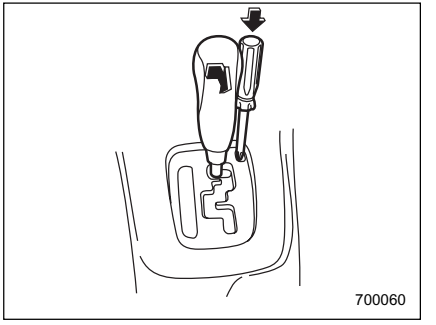

4. Insert the screwdriver into the hole.
5. Push down on the screwdriver and move the selector lever from the “P” to the “N” position.
6. Remove the screwdriver from the hole. Depress the brake pedal and start the engine.

Take your vehicle to the nearest SUBARU dealer immediately to have the system repaired.

Rear viscous limited slip differential (LSD) (if equipped)

The LSD provides optimum distribution of power according to the difference in revolutions between the right and left rear wheels that may be caused by certain driving conditions, thereby improving driving stability on snow-covered, muddy or other slippery roads.

⚠ CAUTION

- **Never start the engine while a tire on one side is jacked up, as the vehicle may move.**
- **If one rear tire is spinning in mud, avoid continued spinning at high speed as this could adversely affect the LSD.**
- **If a different size rear tire is temporarily used (as in an emergency), it will adversely affect the LSD. Always replace it with a regular size tire as soon as possible.**

Power steering

The power steering system operates only when the engine is running.
If you lose power steering assist because the engine stops or the system fails to function, you can steer but it will take much more effort.

NOTE

Right after the engine has been started and before it has warmed up, you may hear a noise coming from areas adjacent to the power steering pump which is located at the right-front area of the engine compartment. This noise is normal. It does not indicate power steering system trouble.

⚠ CAUTION

Do not hold the steering wheel at the fully locked position left or right for more than five seconds. This may damage the power steering pump.

Braking

■ Braking tips

⚠ WARNING

Never rest your foot on the brake pedal while driving. This can cause dangerous overheating of the brakes and needless wear on the brake pads and linings.

▼ When the brakes get wet

When driving in rain or after washing the vehicle, the brakes may get wet. As a result, brake stopping distance will be longer. To dry the brakes, drive the vehicle at a safe speed while lightly depressing the brake pedal to heat up the brakes.

▼ Use of engine braking

Remember to make use of engine braking in addition to foot braking. When descending a grade, if only the foot brake is used, the brakes may start working improperly because of brake fluid overheating, caused by overheated brake pads. To help prevent this, shift into a lower gear to get stronger engine braking.

▼ Braking when a tire is punctured

Do not depress the brake pedal suddenly when a tire is punctured. This could cause a loss of control of the vehicle. Keep driving straight ahead while gradually reducing speed. Then slowly pull off the road to a safe place.

■ Brake system

▼ Two separate circuits

Your vehicle has two separate circuit brake systems. Each circuit works diagonally across the vehicle. If one circuit of the brake system should fail, the other half of the system still works. If one circuit fails, the brake pedal will go down much closer to the floor than usual and you will need to press it down much harder. And a much longer distance will be needed to stop the vehicle.

▼ Brake booster

The brake booster uses engine manifold vacuum to assist braking force. Do not turn off the engine while driving because that will turn off the brake booster, resulting in poor braking power.
The brakes will continue to work even when the brake booster completely stops functioning. If this happens, however, you will have to push the pedal much harder than normal and the braking distance will increase.

– CONTINUED –

■ Disc brake pad wear warning indicators

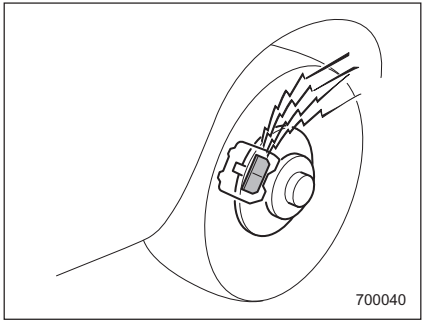

The disc brake pad wear warning indicators on the disc brakes give a warning noise when the brake pads are worn.
If a squeaking or scraping noise is heard from the disc brakes while braking, immediately have your vehicle checked by your SUBARU dealer.

ABS (Anti-lock Brake System)

The ABS system prevents the lock-up of wheels which may occur during sudden braking or braking on slippery road surfaces. This helps prevent the loss of steering control and directional stability caused by wheel lock-up.

When the ABS system is operating, you may hear a chattering noise or feel a slight vibration in the brake pedal. This is normal when the ABS operates.

The ABS system will not operate when the vehicle speed is below approximately 6 mph (10 km/h).

⚠ WARNING

Always use the utmost care in driving – overconfidence because you are driving with an ABS equipped vehicle could easily lead to a serious accident.

⚠ CAUTION

- **The ABS system does not always decrease stopping distance. You should always maintain a safe following distance from other vehicles.**
- **When driving on badly surfaced roads, gravel roads, icy roads, or over deep newly fallen snow, stopping distances may be longer for a vehicle with the ABS system than one without. When driving under these conditions, therefore, reduce your speed and leave ample distance from other vehicles.**
- **When you feel the ABS system operating, you should maintain constant brake pedal pressure. Do not pump the brake pedal since doing so may defeat the operation of the ABS system.**

■ ABS system self-check

You may feel a slight shock in the brake pedal and hear the operating sound of ABS from the engine compartment just after the vehicle is started. This is caused by an automatic functional test of the ABS system being carried out and does not indicate any abnormal condition.

■ ABS warning light

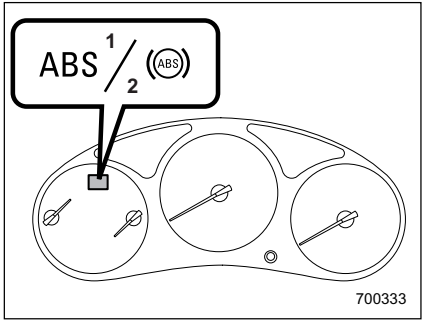

1) U.S.-spec. models
2) Canada-spec. models

The ABS warning light comes on when the ignition switch is turned to the “ON” position and goes out after approximately two seconds.
This is an indication that the ABS system is working properly.
When driving with an insufficient battery voltage such as when the engine is jump started, the ABS warning light may come on. This is due to the low battery voltage and does not indicate a malfunction. When the battery becomes fully charged, the light will go out.

⚠ CAUTION

If the warning light behaves as follows, the ABS system may not be working properly.

When the warning light is on, the ABS function shuts down; however, the conventional brake system continues to operate normally.

- **The warning light does not come on when the ignition switch is turned to the “ON” position.**
- **The warning light comes on when the ignition switch is turned to the “ON” position, but it does not go out even when the vehicle speed exceeds approximately 8 mph (12 km/h).**
- **The warning light comes on during driving.**

If these occur, have the ABS system repaired at the first available opportunity by your SUBARU dealer.

NOTE

If the warning light behavior is as described in the following, the ABS system may be considered normal.

- **The warning light comes on right after the engine is started but goes out immediately, remaining off.**
- **The warning light remains on after the engine has been started, but it goes out when the vehicle speed reaches approximately 8 mph (12 km/h).**
- **The warning light comes on during driving, but it goes out immediately and remains off.**

Electronic Brake Force Distribution (EBD) system (if equipped)

The EBD system maximizes the effectiveness of the brakes by allowing the rear brakes to supply a greater proportion of the braking force. It functions by adjusting the distribution of braking force to the rear wheels in accordance with the vehicle's loading condition and speed.
The EBD system is an integral part of the ABS system and uses some of the ABS system's components to perform its function of optimizing the distribution of braking force. If any of the ABS components used by the EBD function fails, the EBD system also stops working.

When the EBD system is operating, you may hear a chattering noise or feel a slight vibration in the brake pedal. This is normal and does not indicate a malfunction.

■ Steps to take if EBD system fails

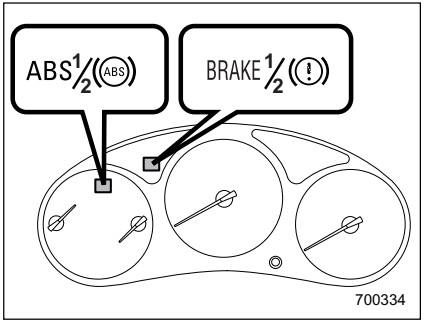

1) U.S.-spec. models
2) Canada-spec. models

If a malfunction occurs in the EBD system, the system stops working and the brake system warning light and ABS warning light come on simultaneously.

The EBD system may be faulty if the brake system warning light and ABS warning light illuminate simultaneously during driving.
Even if the EBD system fails, the conventional braking system will still function. However, the rear wheels will be more prone to locking when the brakes are applied harder than usual and the vehicle's motion may therefore become somewhat harder to control.
If the brake system warning light and ABS warning light illuminate simultaneously, take the following steps:
1. Stop the vehicle in the nearest safe, flat place.
2. Shut down the engine, then restart it.
3. Release the parking brake. If both warning lights go out, the EBD system may be faulty.
Drive carefully to the nearest SUBARU dealer and have the system inspected.
4. If both warning lights come on again and stay illuminated after the engine has been restarted, shut down the engine again, apply the parking brake, and check the brake fluid level.
5. If the brake fluid level is not below the "MIN" mark, the EBD system may be faulty. Drive carefully to the nearest SUBARU dealer and have the system inspected.
6. If the brake fluid level is below the "MIN" mark, DO NOT drive the vehicle. Instead, have the vehicle towed to the nearest SUBARU dealer for repair.

WARNING

- **Driving with the brake system warning light on is dangerous. This indicates your brake system may not be working properly. If the light remains on, have the brakes inspected by a SUBARU dealer immediately.**
- **If at all in doubt about whether the brakes are operating properly, do not drive the vehicle. Have your vehicle towed to the nearest SUBARU dealer for repair.**

Vehicle Dynamics Control system (if equipped)

WARNING

Always use the utmost care in driving – overconfidence because you are driving with a Vehicle Dynamics Control system equipped vehicle could easily lead to a serious accident.

CAUTION

- **Even if your vehicle is equipped with Vehicle Dynamics Control, winter tires or snow chains should be used when driving on snow-covered or icy roads; in addition, vehicle speed should be reduced considerably. Simply having a Vehicle Dynamics Control system does not guarantee that the vehicle will be able to avoid accidents in any situation.**
- **Activation of the Vehicle Dynamics Control system is an indication that the road being travelled on has a slippery surface; since having Vehicle Dynamics Control is no guarantee that full vehicle control will be maintained at all times and under all conditions, its activation should be seen as a sign that the speed of the vehicle should be reduced considerably.**
- **Whenever suspension components, steering components, or an axle are removed from a vehicle equipped with Vehicle Dynamics Control, have an authorized SUBARU dealer perform an inspection of that system.**
- **The following precautions should be observed in order to ensure that the Vehicle Dynamics Control system is operating properly:**
  - **All four wheels should be fitted with tires of the same size, type, and brand. Furthermore, the amount of wear should be the same for all four tires.**

– CONTINUED –

– Keep the tire pressure at the proper level as shown on the placard attached to the vehicle's door pillar.

– Use only the special temporary spare tire to replace a flat tire. With a temporary spare tire, the effectiveness of the Vehicle Dynamics Control system is reduced and this should be taken into account when driving the vehicle in such a condition.

In the event of wheelspin and/or skidding on a slippery road surface and/or during cornering and/or an evasive maneuver, the Vehicle Dynamics Control system adjusts the engine's output and the wheels' respective braking forces to help maintain traction and directional control.

- Traction Control Function

The traction control function is designed to prevent spinning of the driving wheels on slippery road surfaces, thereby helping to maintain traction and directional control. Activation of this function is shown by steady illumination of the Vehicle Dynamics Control operation indicator light.

- Skid Suppression Function

The skid suppression function is designed to help maintain directional stability by suppressing the wheels' tendency to slide sideways during steering operations. Activation of this function is shown by flashing of the Vehicle Dynamics Control operation indicator light.

NOTE

• Slight twitching of the brake pedal may be felt when the Vehicle Dynamics Control system operates; a small degree of vehicle or steering wheel shaking may also be noticed in this situation. These are normal characteristics of Vehicle Dynamics Control operation and are no cause for alarm.

• When driving off immediately after starting the engine, a short-lived operation noise may be noticed coming from the engine compartment. This noise is generated as a result of a check being performed on the Vehicle Dynamics Control system and is normal.

• Depending on the timing of activation of the brakes, certain situations may occur just after driving off where the brake pedal seems to exhibit a jolting motion. This too is a consequence of the Vehicle Dynamics Control operational check and is normal.

• In the circumstances listed in the following, the vehicle may be more unstable than it feels to the driver. The Vehicle Dynamics Control System may therefore operate. Such operation does not indicate a system fault.

• on gravel-covered or rutted roads
• on unfinished roads
• when the vehicle is towing a trailer
• when the vehicle is fitted with snow tires or winter tires

• Activation of the Vehicle Dynamics Control system will cause operation of the steering wheel to feel slightly different compared to that for normal conditions.

• Even if the vehicle is equipped with a Vehicle Dynamics Control system, it is important that winter tires be used when driving on snow-covered or icy roads. (All four wheels should be fitted with tires of the same size and brand). Furthermore, if snow chains are to be used, they should be fitted on the front wheels. When a vehicle is fitted with snow chains, however, the effectiveness of the Vehicle Dynamics Control system is reduced and this should be taken into account when driving the vehicle in such a condition.

• It is always important to reduce speed when approaching a corner, even if the vehicle is equipped with Vehicle Dynamics Control.

• All four wheels should be fitted with tires of the same size, type, and brand; furthermore, the amount of wear should be the same for all four tires. If these precautions are not observed and non-matching tires are used, it is quite possible that the Vehicle Dynamics Control system will be unable to operate correctly as intended.
• Always turn off the engine before replacing a tire as failure to do so may render the Vehicle Dynamics Control system unable to operate correctly.

■ Vehicle Dynamics Control system monitor

▼ Vehicle Dynamics Control operation indicator light

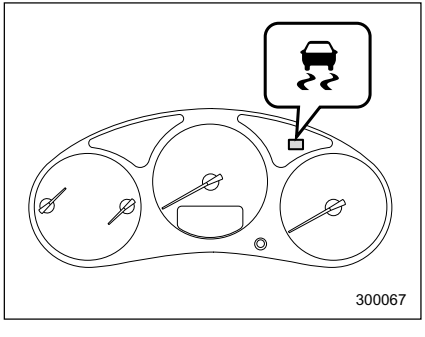

The indicator light turns on when the ignition switch is turned to the ON position; it turns off approximately two seconds later. This indicator light flashes during activation of the skid suppression function and is illuminated steadily during activation of the traction control function.

The following two situations could indicate a malfunction of the Vehicle Dynamics Control system; if either should occur, have an authorized SUBARU dealer carry out an inspection of that system at the first available opportunity.
• The indicator light does not turn on when the ignition switch is turned to the ON position.
• The indicator light does not turn off approximately two seconds after the ignition switch has been turned to the ON position.

▼ Vehicle Dynamics Control warning light/Vehicle Dynamics Control OFF indicator light

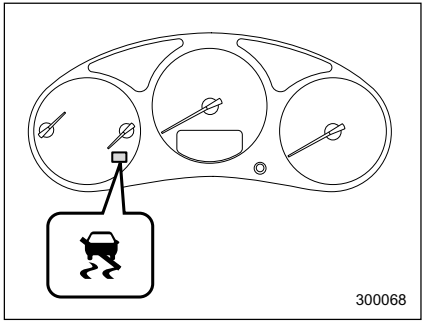

This single light has the function of indicating malfunctions in the Vehicle Dynamics Control system and the function of indicating that the Vehicle Dynamics Control system is not operating. It comes on in the event of a malfunction in the system and is illuminated whenever the system is not operating.

▽ Vehicle Dynamics Control warning

The warning light comes on when the ignition switch is turned to the “ON” position and goes off several seconds after engine startup.This lighting pattern indicates that the Vehicle Dynamics Control system is operating normally.

– CONTINUED –

The following situations could indicate a malfunction of the Vehicle Dynamics Control system; if any should occur, have an authorized SUBARU dealer carry out an inspection of the system at the first available opportunity.

- The warning light does not turn on when the ignition switch is turned to the ON position.
- The warning light turns on while the vehicle is being driven.
- When a malfunction has occurred in the Vehicle Dynamics Control electrical system, only the warning light will turn on. In such an event, the ABS will still be operating normally.
- The warning light will also turn on when a problem occurs with the ABS or Vehicle Dynamics Control electronic control systems.

Because the Vehicle Dynamics Control system controls each brake through the ABS, whenever the ABS stops operating due to a malfunction in that electrical system, the Vehicle Dynamics Control will also become unable to control all four brakes. Thus Vehicle Dynamics Control system operation halts and the warning light turns on. Although both the Vehicle Dynamics Control system and the ABS will be inoperable in this situation, it will still be possible to stop the vehicle using normal braking. The Vehicle Dynamics Control system and the ABS do not adversely affect operation of the vehicle in any way when they are inoperable; however should such a situation occur, drive with care and have an authorized SUBARU dealer carry out an inspection of those systems at the first available opportunity.

NOTE

When the warning light turns on and off in the following way, it indicates that the Vehicle Dynamics Control system is operating normally.

- **Although turning on after the engine has been started, the warning light quickly turns off and stays off.**
- **The warning light turns on when the vehicle is being driven; it then turns off and stays off.**

▽ Vehicle Dynamics Control OFF indicator light

This light comes on to indicate that the Vehicle Dynamics Control system is in non-operation mode. This does not constitute failure of the Vehicle Dynamics Control system.

NOTE

- **The indicator light may stay on for a while after the engine has been started, especially in cold weather. This occurs because the engine has not yet warmed up and is completely normal. The light will turn off when the engine has reached a suitable operating temperature.**
- **When an engine problem occurs and the malfunction indicator lamp turns on, the indicator light will also come on.**

The following two situations could indicate malfunction of the Vehicle Dynamics Control system; if either should occur, have an authorized SUBARU dealer carry out an inspection of that system at the first available opportunity.

- The indicator light does not turn on when the ignition switch is turned to the ON position.
- The indicator light fails to turn off after the engine is started, even when several minutes have passed to allow the engine to heat up sufficiently.

■ Vehicle Dynamics Control OFF switch

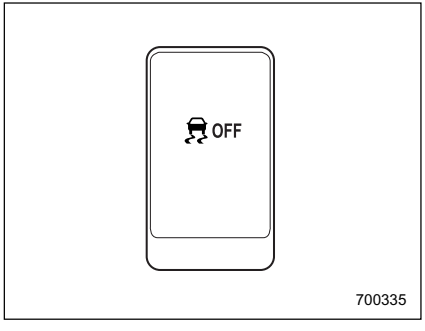

Pressing the switch to deactivate the Vehicle Dynamics Control system can facilitate the following operations:

- a standing start on a steeply sloping road with a snowy, gravel-covered, or otherwise slippery surface
- extrication of the vehicle when its wheels are stuck in mud or deep snow

When the switch is pressed during engine operation, the " " indicator light illuminates. The Vehicle Dynamics Control system will be deactivated and the vehicle will behave like a model not equipped with the Vehicle Dynamics Control system. When the switch is pressed again to reactivate the Vehicle Dynamics Control system, the indicator light goes off.

With the Vehicle Dynamics Control system deactivated, traction and stability enhancement offered by Vehicle Dynamics Control system is unavailable. Therefore you should not deactivate the Vehicle Dynamics Control system except under above-mentioned situations.

NOTE

- **When the switch has been pressed to deactivate the Vehicle Dynamics Control system, the Vehicle Dynamics Control system automatically reactivates itself the next time the ignition switch is turned to the OFF position and the engine is restarted.**
- **If the switch is held down for 10 seconds or longer, the indicator light goes off, the Vehicle Dynamics Control system is activated, and the system ignores any further pressing of the switch. To make the switch usable again, turn the ignition switch to the OFF position and restart the engine.**
- **When the switch is pressed to deactivate the Vehicle Dynamics Control system, the vehicle's running performance is comparable with that of a vehicle that does not have a Vehicle Dynamics Control system. Do not deactivate the Vehicle Dynamics Control system except when absolutely necessary.**

Parking your vehicle

■ Parking brake

To set the parking brake, press the brake pedal firmly and hold it down while fully pulling up the parking brake lever.

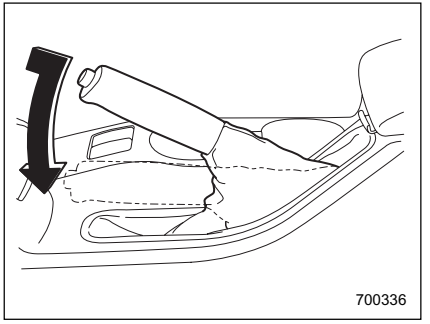

To release the parking brake, pull the lever up slightly, press the release button, then lower the lever while keeping the button pressed.

When the parking brake is set while the engine is running, the parking brake warning light comes on. After starting the vehicle, be sure that the warning light has gone out before the vehicle is driven. Refer to the “Warning and indicator lights” section (chapter 3).

⚠ CAUTION

Never drive while the parking brake is set because this will cause unnecessary wear on the brake linings. Before starting to drive, always make sure that the parking brake has been fully released.

■ Parking tips

When parking your vehicle, always set the parking brake firmly and put the shift lever in the “1” (1st) for an upgrade or “R” (Reverse) for a downgrade for manual transmission vehicles, or in the “P” (Park) position for automatic transmission vehicles. Always set the parking brake firmly when parking your vehicle. Never rely on the transmission alone to hold the vehicle.

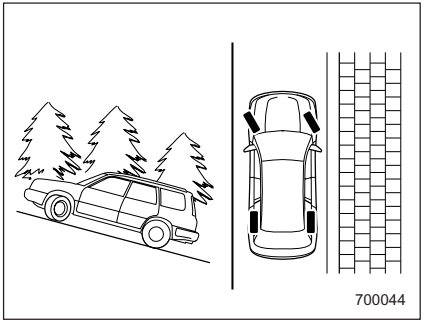

When parking on a hill, always turn the steering wheel. When the vehicle is headed up the hill, the front wheels should be turned away from the curb.

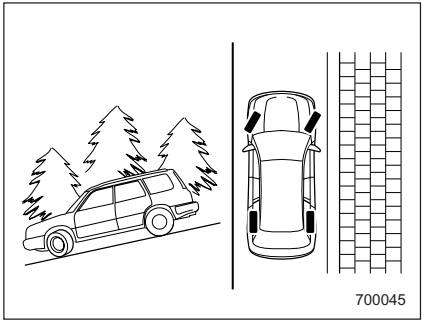

When facing downhill, the front wheels should be turned into the curb.

⚠ WARNING

- **Never leave unattended children or pets in the vehicle. They could accidentally injure themselves or others through inadvertent operation of the vehicle. Also, on hot or sunny days, the temperature in a closed vehicle could quickly become high enough to cause severe or possibly fatal injuries to people.**
- **Do not park the vehicle over flammable materials such as dry grass, waste paper or rags, as they may burn easily if they come near hot engine or exhaust system parts.**
- **Be sure to stop the engine if you take a nap in the vehicle. If engine exhaust gas enters the passenger compartment, occupants in the vehicle could die from carbon monoxide (CO) contained in the exhaust gas.**

Hill holder (Manual transmission – if equipped)

The Hill holder is a device to make starting on an uphill grade easier.

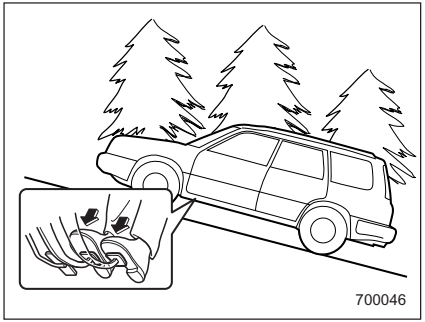

On an uphill grade, when the clutch pedal is depressed while the brake pedal is also depressed, braking power is maintained temporarily by the Hill holder when the brake pedal is released. The driver is therefore able to start the vehicle the same way as on a level grade, just using the clutch and accelerator pedal.

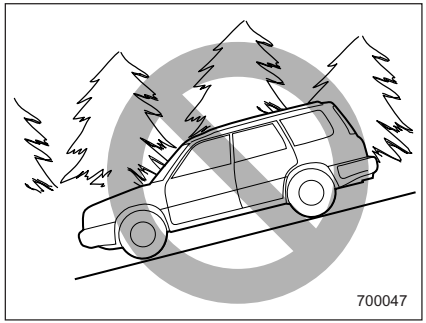

The Hill holder does not operate when the vehicle is facing downhill. And the Hill holder may not operate on slight grades.

When starting in reverse and using the Hill holder, a braking effect may be felt even after the brake pedal has been released. However, this braking effect should disappear once the clutch pedal is released.

A slight jolt may be felt when the vehicle begins to move forward after being reversed.

If the braking power of the Hill holder is insufficient after the brake pedal is released, apply more braking power by pressing the brake pedal again.

– CONTINUED –

⚠ CAUTION

The Hill Holder is a device only for helping the driver to START the vehicle on an uphill grade. To prevent accidents when the vehicle is parked on a slope, be sure to firmly set the parking brake. When setting the parking brake, make sure that the vehicle remains stationary when the clutch pedal is released.

Cruise control

Cruise control enables you to maintain a constant vehicle speed without holding your foot on the accelerator pedal and it is operative when the vehicle speed is 25 mph (40 km/h) or more. Make sure the main switch is turned "OFF" when the cruise control is not in use to avoid unintentionally setting the cruise control.

NOTE

If you move the cruise control lever or press the main switch button while turning the ignition switch "ON", the cruise control function is deactivated and the "CRUISE" indicator light flashes. To reactivate the cruise control function, turn the ignition switch back to the "ACC" or "LOCK" position, and then turn it again to the "ON" position.

⚠ WARNING

Do not use the cruise control under any of the following conditions. This may cause loss of vehicle control:

- **driving up or down a steep grade**
- **driving on slippery or winding roads**
- **driving in heavy traffic**

■ To set cruise control

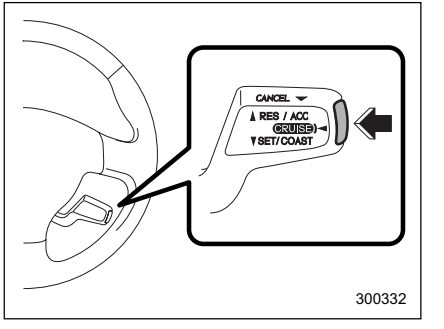

1. Push the main switch button.

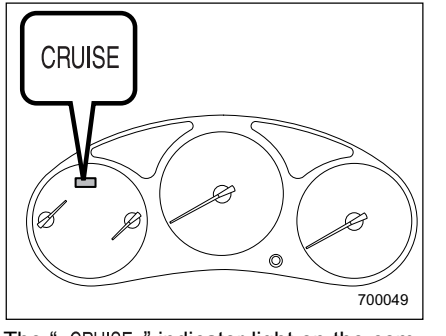

The " CRUISE " indicator light on the combination meter will come on.

2. Depress the accelerator pedal until the

vehicle reaches the desired speed.

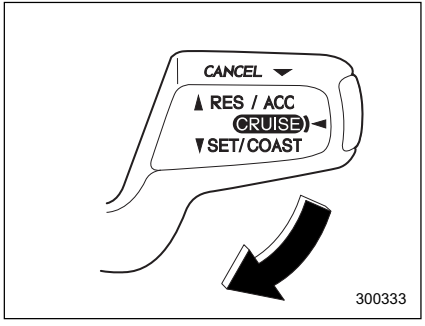

3. Push the control lever downward in the "SET/COAST" direction and release it. Then release the accelerator pedal.

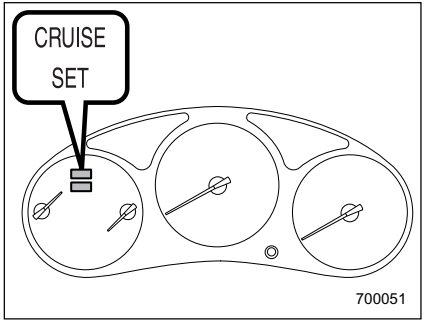

At this time, the " SET " indicator light is illuminated in the combination meter.

The vehicle will maintain the desired speed.

Vehicle speed can be temporarily increased while driving with the cruise control activated. Simply depress the accelerator pedal to accelerate the vehicle. When the accelerator pedal is released, the vehicle will return to and maintain the previous cruising speed.

■ To temporarily cancel the cruise control

There are five ways to cancel the cruise control temporarily:

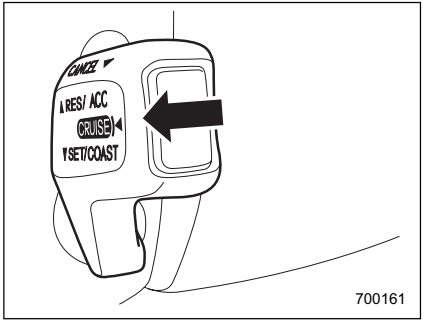

- Pull the control lever in the "CANCEL" direction (if so equipped).
- Depress the brake pedal.
- Depress the clutch pedal (manual transmission vehicles only).
- Shift the selector lever into the "N" position (automatic transmission vehicles only).
- Shift the shift lever into neutral (manual transmission vehicles only).

The " SET " indicator light in the combination meter goes off when the cruise control is cancelled.

To resume the cruise control after it has been temporarily canceled and with vehicle speed of approximately 20 mph (32 km/h) or more, push the control lever upward in the "RES/ACC" direction to return to the original cruising speed automatically.
The " SET " indicator light in the combination meter will automatically come on at this time.

■ To turn off the cruise control

There are two ways to turn off the cruise control:
- Push the main switch again.
- Turn the ignition switch to the "ACC" or "LOCK" position (but only when the vehicle is completely stopped).

– CONTINUED –

■ To change the cruising speed

▼ To increase the speed (by control lever)

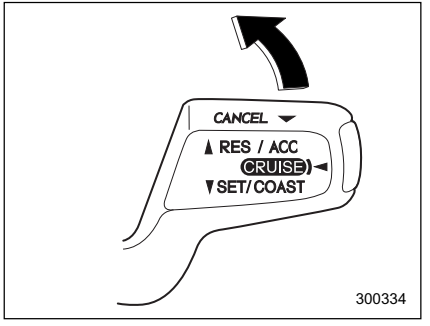

Push the control lever upward in the “RES/ACC” direction and hold it until the vehicle reaches the desired speed. Then, release the control lever. The vehicle speed at that moment will be memorized and treated as the new set speed.

When the difference between the actual vehicle speed and the set speed is less than 4 mph (6.8 km/h), the set speed can be increased 1 mph (1.6 km/h) each time by pressing the control lever upward in the “RES/ACC” direction quickly within 0.25 second.

▼ To increase the speed (by accelerator pedal)

1. Depress the accelerator pedal to accelerate the vehicle to the desired speed.
2. Push the control lever downward in the “SET/COAST” direction once. Now the desired speed is set and the vehicle will keep running at that speed without depressing the accelerator pedal.

NOTE

If the difference between the actual vehicle speed when the control lever is pushed downward and the speed last time you set is less than 4 mph (6.8 km/h), the vehicle speed will be lowered by 1 mph (1.6 km/h). This occurs because the cruise control system unit regards this lever operation as that intended to decrease the vehicle speed.

▼ To decrease the speed (by control lever)

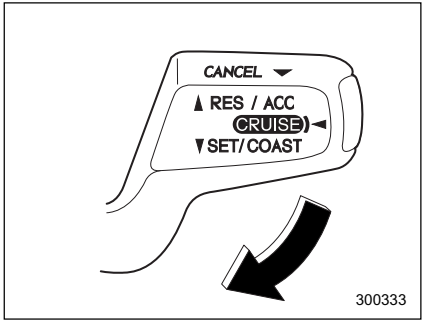

Push the control lever downward in the “SET/COAST” direction and hold it until the vehicle reaches the desired speed. Then, release the control lever. The vehicle speed at that moment will be memorized and treated as the new set speed.

When the difference between the actual vehicle speed and the set speed is less than 4 mph (6.8 km/h), the set speed can be lowered 1 mph (1.6 km/h) each time by pressing the control lever downward in the “SET/COAST” direction quickly within 0.25 second.

▼ **To decrease the speed (by brake pedal)**

1. Depress the brake pedal to release cruise control temporarily.
2. When the speed decreases to the desired speed, press the control lever downward in the “SET/COAST” direction once. Now the desired speed is set and the vehicle will keep running at that speed without depressing the accelerator pedal.

Self-leveling rear suspension (if equipped)

The self-leveling suspension adjusts the vehicle body position automatically to keep it level at all times irrespective of the number of occupants and the amount of cargo.

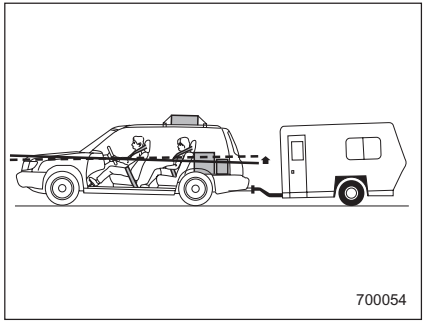

The self-leveling system is incorporated in the rear suspension shock absorber and operates only when the vehicle is in motion.

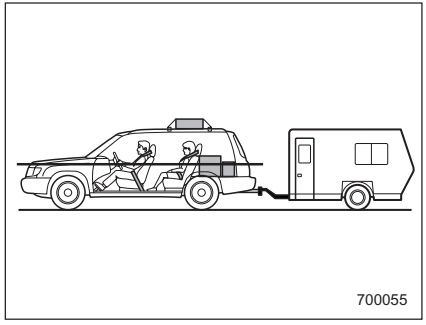

Owing to the self-leveling suspension, the vehicle body is adjusted to the proper position after several drive trips, even if the rear of the vehicle is lowered by loaded cargos or a coupled trailer.

If cargos are unloaded all at once, the vehicle height may become higher than the normal level. This is because that the hydraulic pressure in the self-leveling suspension was increased for leveling the body when the cargos were loaded. In such a case, the vehicle height will return to the original level after several driving trips.

NOTE

If the rear axle is loaded excessively, the vehicle body may not be adjusted to the proper position.

New vehicle break-in driving – the first 1,000 miles (1,600 km) 8-2
Fuel economy hints 8-2
Engine exhaust gas (Carbon monoxide) 8-2
Catalytic converter 8-3
Periodic inspections 8-4
Driving in foreign countries 8-4
Driving tips for AWD vehicles 8-5
Off road driving 8-6
Winter driving 8-7
Operation during cold weather 8-7
Driving on snowy and icy roads 8-9
Corrosion protection 8-10
Snow tires 8-10
Tire chains 8-10
Rocking the vehicle 8-11
Loading your vehicle 8-11
Vehicle capacity weight 8-12
GVWR and GAWR (Gross Vehicle Weight Rating and Gross Axle Weight Rating) 8-12
Roof rail and crossbar (if equipped) 8-13
Trailer hitch (if equipped) 8-16
Connecting a trailer 8-16
When you do not tow a trailer 8-17
Trailer towing 8-18
Warranties and maintenance 8-18
Maximum load limits 8-18
Trailer hitches 8-21
Connecting a trailer 8-22
Trailer towing tips 8-23

New vehicle break-in driving – the first 1,000 miles (1,600 km)

The performance and long life of your vehicle are dependent on how you handle and care for your vehicle while it is new. Follow these instructions during the first 1,000 miles (1,600 km):

- Do not race the engine. And do not allow engine speed to exceed 4,000 rpm except in an emergency.
- Do not drive at one constant engine or vehicle speed for a long time, either fast or slow.
- Avoid starting suddenly and rapid acceleration, except in an emergency.
- Avoid hard braking, except in an emergency.

The same break-in procedures should be applied to an overhauled engine, newly mounted engine or when brake pads or brake linings are replaced with new ones.

Fuel economy hints

The following suggestions will help to save your fuel.

- Select the proper gear position for the speed and road conditions.
- Avoid sudden acceleration or deceleration. Always accelerate gently until you reach the desired speed. Then try to maintain that speed for as long as possible.
- Do not pump the accelerator and avoid racing the engine.
- Avoid unnecessary engine idling.
- Keep the engine properly tuned.
- Keep the tires inflated to the correct pressure shown on the tire placard, which is located under the door latch on the driver's side. Low pressure will increase tire wear and fuel consumption.
- Use the air conditioner only when necessary.
- Keep the front and rear wheels in proper alignment.
- Avoid carrying unnecessary cargo.

Engine exhaust gas (Carbon monoxide)

WARNING

- **Never inhale engine exhaust gas. Engine exhaust gas contains carbon monoxide, a colorless and odorless gas which is dangerous, or even lethal, if inhaled.**
- **Always properly maintain the engine exhaust system to prevent engine exhaust gas from entering the vehicle.**
- **Never run the engine in a closed space, such as a garage, except for the brief time needed to drive the vehicle in or out of it.**
- **Avoid remaining in a parked vehicle for a lengthy time while the engine is running. If that is unavoidable, then use the ventilation fan to force fresh air into the vehicle.**
- **Always keep the front ventilator inlet grille free from snow, leaves or other obstructions to ensure that the ventilation system always works properly.**

- **If at any time you suspect that exhaust fumes are entering the vehicle, have the problem checked and corrected as soon as possible. If you must drive under these conditions, drive only with all windows fully open.**
- **Keep the rear gate closed while driving to prevent exhaust gas from entering the vehicle.**

NOTE

Due to the expansion and contraction of the metals used in the manufacture of the exhaust system, you may hear a crackling sound coming from the exhaust system for a short time after the engine has been shut off. This sound is normal.

Catalytic converter

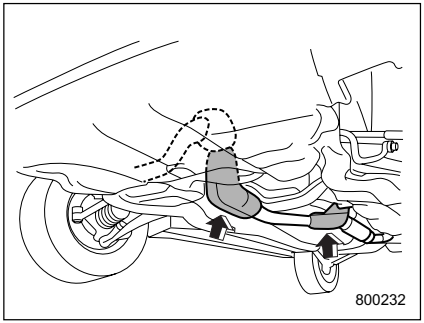

Turbo model

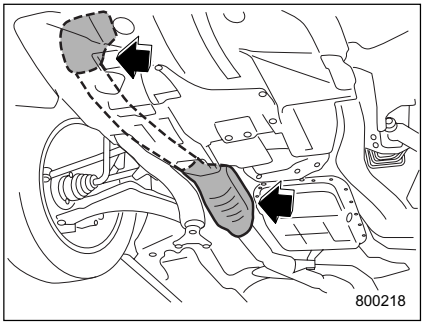

Non-turbo model

The catalytic converter is installed in the exhaust system. It serves as catalyst to reduce HC, CO and NOx in exhaust gases, thus providing cleaner exhaust.

To avoid damage to the catalytic converter:

- Use only unleaded fuel. Even a small amount of leaded fuel will damage the catalytic converter.
- Never start the engine by pushing or pulling the vehicle.
- Avoid racing the engine.
- Never turn off the ignition switch while the vehicle is moving.
- Keep your engine tuned-up. If you feel the engine running rough (misfiring, backfiring or incomplete combustion), have your vehicle checked and repaired by an authorized SUBARU dealer.
- Do not apply undercoating or rust prevention treatment to the heat shield of catalytic converter and the exhaust system.

⚠ WARNING

- **Avoid fire hazards. Do not drive or park the vehicle anywhere near flammable materials (e.g. grass, paper, rags or leaves), because the catalytic converter operates at very high temperatures.**

– CONTINUED –

- **Keep everyone and flammable materials away from the exhaust pipe while the engine is running. The exhaust gas is very hot.**

Periodic inspections

To keep your vehicle in the best condition at all times, always have the recommended maintenance services listed in the maintenance schedule in the “Warranty and Maintenance Booklet” performed at the specified time or mileage intervals.

Driving in foreign countries

When planning to use your vehicle in another country:

- Confirm the availability of the correct fuel. (Refer to the “Fuel requirements” section in chapter 7.)
- Comply with all regulations and requirements of each country.

Driving tips for AWD vehicles

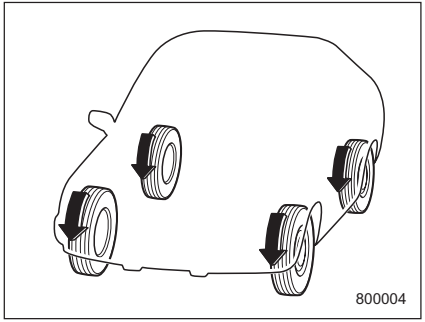

All-Wheel Drive distributes the engine power to all four wheels. AWD vehicles provide better traction when driving on slippery, wet or snow-covered roads and when moving out of mud, dirt and sand. By shifting power between the front and rear wheels, SUBARU AWD can also provide added traction during acceleration and added engine braking force during deceleration.

Therefore, your SUBARU AWD vehicle may handle differently than an ordinary two wheel drive vehicle and it contains some features unique to AWD. For safety purposes as well as to avoid damaging the AWD system, you should keep the following tips in mind:

- An AWD vehicle is better able to climb steeper roads under snowy or slippery conditions than a two wheel drive vehicle. There is little difference in handling, however, during extremely sharp turns or sudden braking. Therefore, when driving down a slope or turning corners, be sure to reduce your speed and maintain an ample distance from other vehicles.
- When replacing a tire, make sure you use only the same size, construction, brand, and load range as the original tires listed on the tire placard. Using other sizes or construction may result in severe mechanical damage to the drive train of your vehicle and may affect ride, handling, braking, speedometer/odometer calibration, and clearance between the body and tires. It also may be dangerous and lead to loss of vehicle control.
- Always check the cold tire pressure before starting to drive. The recommended tire pressure is provided on the tire placard, which is located under the door latch on the driver's side.
- Tire chains should always be placed on the front wheels only.
- There are some precautions that you must observe when towing your vehicle. For detail information, see the "Towing" section in chapter 9.

⚠ WARNING

- **Always maintain a safe driving speed according to the road and weather conditions in order to avoid having an accident on a sharp turn, during sudden braking or under other similar conditions.**
- **Always use the utmost care in driving – overconfidence because you are driving an All-Wheel Drive vehicle could easily lead to a serious accident.**

Off road driving

Because of the AWD feature and higher ground clearance, your SUBARU can be driven on ordinary roads or off-road. But please keep in mind that an AWD SUBARU is a passenger car and is neither a conventional off-road vehicle nor an all-terrain vehicle. If you do take your SUBARU off-road, certain common sense precautions such as the following should be taken:

- Make certain that you and all of your passengers are wearing seatbelts.
- Carry some emergency equipment, such as a towing rope or chain, a shovel, wheel blocks, first aid kit and cell phone or citizens band radio.
- Drive carefully. Do not take unnecessary risks by driving in dangerous areas or over rough terrain.
- Slow down and employ extra caution at all times. When driving off-road, you will not have the benefit of marked traffic lanes, banked curves, traffic signs and the like.
- Do not drive across steep slopes. Instead, drive either straight up or straight down the slopes. A vehicle can much more easily tip over sideways than it can end over end. Avoid driving straight up or down slopes that are too steep.
- Avoid sharp turning maneuvers, especially at higher speeds.
- Do not grip the inside or spokes of the steering wheel. A bad bump could jerk the wheel and injure your hands. Instead drive with your fingers and thumbs on the outside of the rim.
- If driving through water, such as when crossing shallow streams, first check the depth of the water and the bottom of the stream bed for firmness and ensure that the bed of the stream is flat. Drive slowly and completely through the stream. The water should be shallow enough that it does not reach the vehicle's undercarriage. Water entering the engine air intake or the exhaust pipe or water splashing onto electrical parts may damage your vehicle and may cause it to stall. Never attempt to drive through rushing water; regardless of its depth, it can wash away the ground from under your tires, resulting in possible loss of traction and even vehicle rollover.
- Always check your brakes for effectiveness immediately after driving in sand, mud or water. Do this by driving slowly and stepping on the brake pedal. Repeat that process several times to dry out the brake discs and brake pads.
- Do not drive or park over or near flammable materials such as dry grass or fallen leaves, as they may burn easily. The exhaust system is very hot while the engine is running and right after the engine stops. This could create a fire hazard.
- After driving through tall grass, mud, rocks, sand, rivers, etc., check that there is no grass, bush, paper, rags, stones, sand, etc. adhering to or trapped on the underbody. Clear off any such matter from the underbody. If the vehicle is used with these materials trapped or adhering to the underbody, a mechanical breakdown or fire could occur.
- Secure all cargo carried inside the vehicle and make certain that it is not piled higher than the seatbacks. During sudden stops or jolts, unsecured cargo could be thrown around in the vehicle and cause injury. Do not pile heavy loads on the roof. Those loads raise the vehicle's center of gravity and make it more prone to tip over.
- If you must rock the vehicle to free it from sand or mud, depress the accelerator pedal slightly and move the selector lever back and forth between "D" and "R" repeatedly. Do not race the engine. For the best possible traction, avoid spinning the wheels when trying to free the vehicle.

When the road surface is extremely slippery, you can obtain better traction by starting the vehicle with the transmission

in 2nd than 1st (both for MT and AT).
- Never equip your vehicle with tires larger than those specified in this manual.
- Frequent driving of an AWD vehicle under hard-driving conditions such as rough roads or off roads will necessitate more frequent replacement of engine oil, brake fluid and transmission oil than that specified in the maintenance schedule described in the “Warranty and Maintenance Booklet”.

Remember that damage done to your SUBARU while operating it off-road and not using common sense precautions such as those listed above is not eligible for warranty coverage.
- Wash the vehicle’s underbody after off-road driving. Suspension components are particularly prone to dirt buildup, so they need to be washed thoroughly.

WARNING

- **Always maintain a safe driving speed according to the road and weather conditions in order to avoid having an accident on a sharp turn, during sudden braking or under other similar conditions.**
- **Always use the utmost care in driving – overconfidence because you are driving an All-Wheel Drive vehicle could easily lead to a serious accident.**

Winter driving

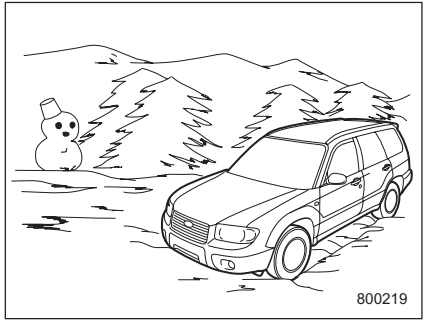

■ Operation during cold weather

Carry some emergency equipment, such as tire chains, a window scraper, a bag of sand, flares, a small shovel, and jumper cables.

Check the battery and cables. Cold temperatures reduce battery capacity. The battery must be in good condition to provide enough power for cold winter starts.

Use an engine oil of proper grade and viscosity for cold weather. Heavy summer oil will cause harder starting.

Keep the door locks from freezing by

– CONTINUED –

squirting them with deicer or glycerin.

Forcing a frozen door open may damage or separate the rubber weather strips around the door. If the door is frozen, use hot water to melt the ice, and afterwards thoroughly wipe the water away.

Use a windshield washer fluid that contains an antifreeze solution. Do not use engine antifreeze or other substitutes because they may damage the paint of the vehicle.
SUBARU Windshield Washer Fluid contains 58.5% methyl alcohol and 41.5% surfactant, by volume. Its freezing temperature varies according to how much it is diluted, as indicated in the following table.

Washer Fluid Concentration	Freezing Temperature
30%	**10.4°F (–12°C)**
50%	**–4°F (–20°C)**
100%	**–49°F (–45°C)**

In order to prevent freezing of washer fluid, check the freezing temperatures in the table above when adjusting the fluid concentration to the outside temperature.
If you fill the reservoir tank with a fluid with a different concentration from the one used previously, purge the old fluid from the piping between the reservoir tank and washer nozzles by operating the washer for a certain period of time. Otherwise, if the concentration of the fluid remaining in the piping is too low for the outside temperature, it may freeze and block the nozzles.

⚠ CAUTION

Adjust the washer fluid concentration appropriately for the outside temperature. If the concentration is inappropriate, sprayed washer fluid may freeze on the windshield and obstruct your view, and the fluid may freeze in the reservoir tank.

▼ Before driving your vehicle

Before entering the vehicle, remove any snow or ice from your shoes because that could make the pedals slippery and dangerous.

While warming up the vehicle before driving, check that the accelerator pedal, brake pedal, and all other controls operate smoothly.

Clear away ice and snow that has accumulated under the fenders to avoid making steering difficult. During severe winter driving, stop when and where it is safe to do so and check under the fenders periodically.

▼ Parking in cold weather

Do not use the parking brake when parking for long periods in cold weather since it could freeze in that position. Instead, observe the following.
1. Place the shift lever in “1” or “R” for manual transmission vehicles, and in “P” for automatic transmission vehicles.
2. Use tire stops under the tires to prevent the vehicle from moving.

When the vehicle is parked in snow or when it snows, raise the wiper blades off the glass to prevent damage to them.

When the vehicle has been left parked after use on roads heavily covered with snow, or has been left parked during a snowstorm, icing may develop on the brake system, which could cause poor braking action. Check for snow or ice buildup on the suspension, disc brakes and brake hoses underneath the vehicle.
If there is caked snow or ice, remove it, being careful not to damage the disc brakes and brake hoses and ABS harness.

⚠ WARNING

Snow can trap dangerous exhaust gases under your vehicle. Keep snow clear of the exhaust pipe and from around your vehicle if you park the vehicle in snow with the engine running.

▼ Refueling in cold weather

To help prevent moisture from forming in the fuel system and the risk of its freezing, use of an antifreeze additive in the fuel tank is recommended during cold weather.
Use only additives that are specifically designed for this purpose. When an antifreeze additive is used, its effect lasts longer if the tank is refilled whenever the fuel level reaches half empty.

If your SUBARU is not going to be used for an extended period, it is best to have the fuel tank filled to capacity.

■ Driving on snowy and icy roads

To prevent skidding and slipping, avoid sudden braking, abrupt acceleration, high-speed driving, and sharp turning when driving on snowy or icy roads.
Always maintain ample distance between your vehicle and the vehicle ahead of you to avoid the need for sudden braking.
To supplement the foot brake, use the engine brake effectively to control the vehicle speed. (Shift into a lower gear when necessary.)
Avoid shifting down abruptly. Such behavior can cause the wheels to lock, possibly leading to loss of vehicle control.

An anti-lock brake system (ABS) enhances your vehicle's braking performance on snowy and icy roads. Refer to the "ABS (Anti-lock Brake System)" section in chapter 7 for information on braking on slippery surfaces.

⚠ WARNING

Do not use the cruise control on slippery roads such as snowy or icy roads. This may cause loss of vehicle control.

⚠ CAUTION

Avoid prolonged continuous driving in snowstorms. Snow will enter the engine's intake system and may hinder the air flow, which could result in engine shutdown or even breakdown.

▼ Wiper operation when snowing

Before driving in cold weather, make sure the wiper blades are not frozen to the windshield or rear window. If the wiper blades are frozen to the windshield or rear window, use the defroster with the airflow control button/dial in the " " position and the temperature control dial set for maximum warmth until the wiper blades are completely thawed out. If your vehicle is equipped with a wiper deicer, it is helpful to thaw the windshield wiper blades. To thaw out the rear wiper blade, use the rear window defogger.

When driving in snow, if frozen snow starts to stick on the surface of the windshield despite wiper operation, use the defroster with the airflow control button/dial in " " and the temperature control dial set for maximum warmth. After the windshield gets warmed enough to melt the frozen snow on it, wash it away using the windshield washer.

Snow stuck on the wiper arm prevents the wiper from working effectively. If snow is stuck on the wiper arm, pull off the road to a safe place, then remove it. If you stop the vehicle at road side, use the hazard warning flasher to alert other drivers.

We recommend use of non-freezing type

– CONTINUED –

wiper blades (winter blades) during the seasons you could have snow and sub-zero temperatures. Blades of this type give superior wiping performance in snowy conditions. Be sure to use blades that are suitable for your vehicle.

CAUTION

During high-speed driving, non-freezing type wiper blades may not perform as well as standard wiper blades. If this happens, reduce the vehicle speed.

NOTE

When the season requiring non-freezing type wiper blades is over, replace them with standard wiper blades.

■ Corrosion protection

Refer to the “Corrosion protection” section (chapter 10).

■ Snow tires

WARNING

- **When replacing original tires with winter (snow) tires, make sure you use only the same size, construction and load range as the original tires listed on the tire placard. Using other sizes and construction may affect speedometer/odometer calibration and clearance between the body and tires. It also may be dangerous and lead to loss of vehicle control.**
- **You must install four winter tires that are of the same size, construction, brand, and load range. Mixing other sizes or constructions may result in severe mechanical damage to the drive train of your vehicle and may affect ride, handling, braking and speedometer/odometer calibration. It also may be dangerous and lead to loss of vehicle control.**
- **Do not use a combination of radial, belted bias or bias tires since it may cause dangerous handling characteristics and lead to an accident.**

Your vehicle is equipped with “all season tires” as original equipment, which are designed to provide an adequate measure of traction, handling and braking performance in year-round driving. In winter, it may be possible to enhance performance through use of tires designed specifically for winter driving conditions.
When you choose to install winter tires on your vehicle, be sure to use the correct tire size and type. You must install four winter tires that are of the same size, construction, brand and load range and you should never mix radial, belted bias or bias tires since this may result in dangerous handling characteristics. When you choose a tire, make sure that there is enough clearance between the tire and vehicle body.

Remember to drive with care at all times regardless of the type of tires on your vehicle.

■ Tire chains

Driving on snowy grades or icy roads may require the use of tire chains, in which case put the chains on the front wheels only. Use only SAE class S type chains that are of the correct size for your tires so as not to damage the vehicle body or suspension.
When driving with tire chains, drive at

speeds below 19 mph (30 km/h).

Always use the utmost care when driving with tire chains – overconfidence because you are driving with tire chains could easily lead to a serious accident.

■ Rocking the vehicle

If you must rock the vehicle to free it from snow, sand, or mud, depress the accelerator pedal slightly and move the selector lever back and forth between “D” and “R” repeatedly. Do not race the engine. For the best possible traction, avoid spinning the wheels when trying to free the vehicle.

When the road surface is extremely slippery, you can obtain better traction by starting the vehicle with the transmission in 2nd than 1st (both for MT and AT).

Refer to the “Automatic transmission” section in chapter 7 for information on holding the transmission in 2nd position.

Loading your vehicle

⚠ WARNING

- **Never allow passengers to ride on a folded rear seatback or in the cargo area. Doing so may result in serious injury.**
- **Never stack luggage or other cargo higher than the top of the seatback because it could tumble forward and injure passengers in the event of a sudden stop or accident. Keep luggage or cargo low, as close to the floor as possible.**

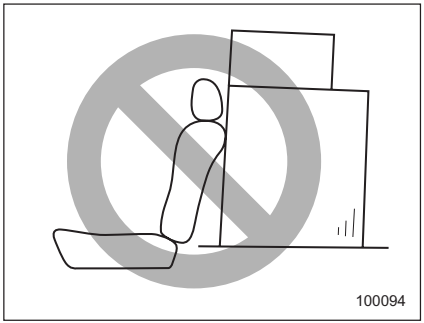

⚠ WARNING

- **When you carry something inside the vehicle, secure it whenever you can to prevent it from being thrown around inside the vehicle during sudden stops, sharp turns or in an accident.**
- **Do not pile heavy loads on the roof. These loads raise the vehicle’s center of gravity and make it more prone to tip over.**
- **Secure lengthy items properly to prevent them from shooting forward and causing serious injury during a sudden stop.**
- **Never exceed the maximum load limit. If you do, some parts on your vehicle can break, or it can change the way your vehicle handles. This could result in loss of control and cause personal injury. Also, overloading can shorten the life of your vehicle.**
- **Do not place anything on the extended cargo area cover. Such items could tumble forward in the event of a sudden stop or a collision. This could cause serious injury.**

– CONTINUED –

⚠ CAUTION

Do not carry spray cans, containers with flammable or corrosive liquids or any other dangerous items inside the vehicle.

NOTE

For better fuel economy, do not carry unneeded cargo.

■ Vehicle capacity weight

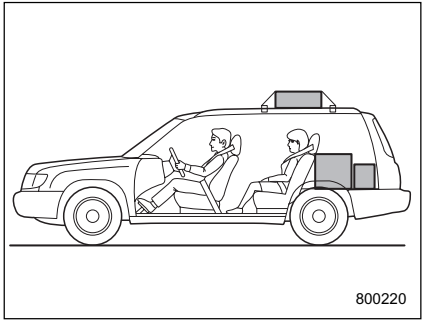

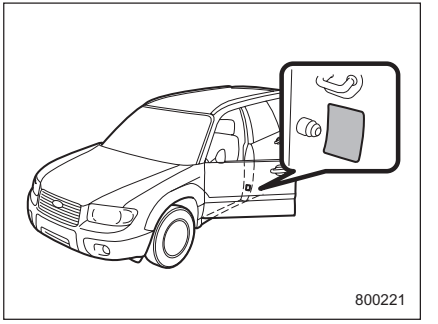

The load capacity of your vehicle is determined by weight, not by available cargo space. The maximum load you can carry in your vehicle is shown on the vehicle placard attached to the driver's side door pillar. It includes the total weight of the driver and all passengers and their belongings, any optional equipment such as a trailer hitch, roof rack or bike carrier, etc., and the tongue load of a trailer.

■ GVWR and GAWR (Gross Vehicle Weight Rating and Gross Axle Weight Rating)

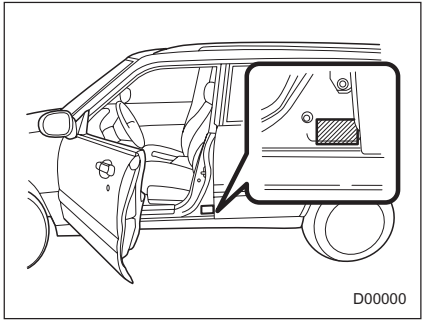

The certification plate attached to the driver's side door jamb shows GVWR (Gross Vehicle Weight Rating) and GAWR (Gross Axle Weight Rating).

The GVW (Gross Vehicle Weight) must never exceed the GVWR. GVW is the combined total of weight of the vehicle, fuel, driver, all passengers, luggage, any optional equipment and trailer tongue load. Therefore, the GVW changes depending on the situation. The GVWR equals Curb Weight (actual weight of your vehicle – including standard equipment, fluids, emergency tools and spare tire assembly) plus the vehicle capacity weight.

In addition, the total weight applied to each axle (GAW) must never exceed the GAWR. The front and rear GAWs can be adjusted by relocating luggage inside the vehicle.
Even if the total weight of your luggage is lower than the vehicle capacity weight, either front or rear GAW may exceed the GAWR, depending on the distribution of the luggage.
When possible, the load should be evenly distributed throughout the vehicle.
If you carry heavy loads in the vehicle, you should confirm that GVW and front and rear GAWs are within the GVWR and GAWR by putting your vehicle on a vehicle scale, found at a commercial weighing station.

Do not use replacement tires with a lower load range than the originals because they may lower the GVWR and GAWR limitations. Replacement tires with a higher load range than the originals do not increase the GVWR and GAWR limitations.

■ Roof rail and crossbar (if equipped)

The roof rail is not designed to carry cargo by itself. Cargo can be carried after securing the roof crossbar kit to the roof rail and installing the appropriate carrying attachment. When installing the roof crossbar kit, follow the manufacturer's instructions.

When you carry cargo on the roof using the roof crossbar kit and a carrying attachment, never exceed the maximum load limit explained in the following. You should also be careful that your vehicle does not exceed the Gross Vehicle Weight Rating (GVWR) and front and rear Gross Axle Weight Rating (GAWR). See the "Loading your vehicle" section in this chapter for information on loading cargo into or onto your vehicle. The maximum load limit of the cargo, crossbars and carrying attachment must not exceed **150 lbs (68 kg)**. Place the heaviest load at the bottom, nearest the roof, and evenly distribute the cargo. Always properly secure all cargo.

⚠ CAUTION

- **For cargo carrying purposes, the roof rail must be used together with a roof crossbar kit and the appropriate carrying attachment. The roof rail must never be used alone to carry cargo. Otherwise, damage to the roof or paint or a dangerous road hazard due to loss of cargo could result.**
- **When using the roof crossbar kit, make sure that the total weight of the crossbars, carrying attachment and cargo does not exceed the maximum load limit. Overloading may cause damage to the vehicle and create a safety hazard.**

▼ Installing carrying attachments on the crossbars

When installing any carrying attachment such as a bike carrier, ski carrier, kayak carrier, cargo basket, etc. on the crossbars, follow the manufacturer's instructions and make sure that the attachment is securely fixed to the crossbars. Use only attachments designed specifically for the crossbars. A set of crossbars is designed to carry loads (cargo and attachment) of not more than **150 lbs (68 kg)**. Before operating the vehicle, make sure that the cargo is properly secured on the attachment.

NOTE

Remember that the vehicle's center of gravity is altered with the weight of the load on the roof, thus affecting the driving characteristics.
Drive carefully. Avoid rapid starts, hard cornering and abrupt stops. Crosswind effects will be increased.

– CONTINUED –

▼ Removal and installation of the crossbars

The crossbars can be removed when you do not use the roof to carry cargo.

▽ To remove the crossbar

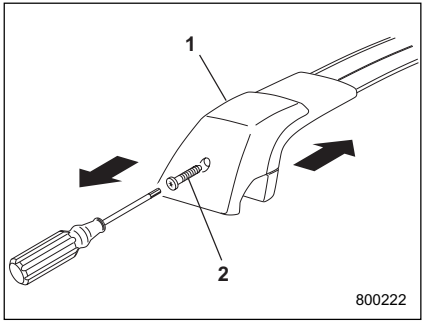

1) Crossbar end support
2) T-30 torx® head screw

1. Loosen and remove the T-30 torx® head screw from the top of each crossbar end support.
2. Move the end support and inner clamp to unhook each side of the crossbar from the roof rail.

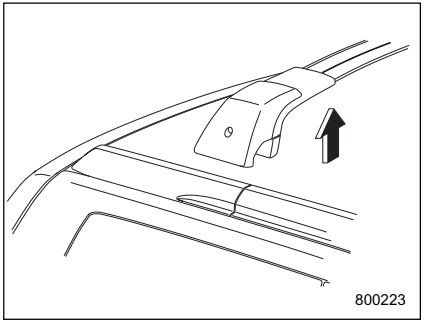

3. Carefully raise the crossbar from roof rails.

NOTE

It may be necessary to move the Front crossbar rearward, near the center of the roof rail for easier removal. Use care not to cross-thread the screw in the insert if it has been removed.

▽ To install the crossbar

Front crossbar:

Front crossbar has 150 LBS. Load Label on right-hand side.

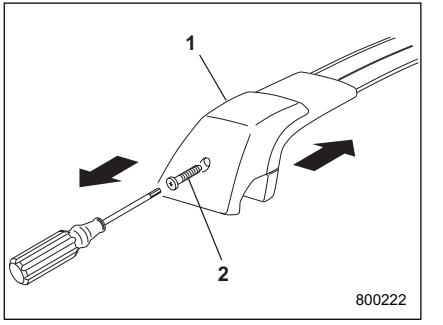

1) Crossbar end support
2) T-30 torx® head screw

1. Before placing the crossbar on the roof rails, make sure that the T-30 torx® head screw is fully loosened from each end support.
2. Spread the inner clamp and the end support as far apart as possible.

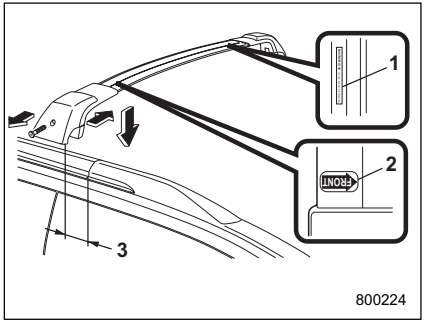

1) Load label
2) Direction arrow label
3) 6 in (150 mm)

3. With the front direction arrow label on the top right side of the crossbar pointing toward the front of the vehicle, carefully place the crossbar across the top of the vehicle so that the crossbar end supports rest on the top of the roof rails approximately 6 inches (150 mm) rearward in the front radius of the roof rail.
4. Move the end support and inner clamp to hook under the end of the roof rail on both sides and loosely assemble the T-30 torx® head screw with the tool provided into the threaded insert in the inner clamp on each end of the crossbar.

NOTE

It may be necessary to start the inner clamp and end support at the center of the roof rail for easier installation, then move the crossbar forward. Use care not to cross-thread the screw in the insert if it has been removed.

5. Adjust the alignment of the crossbar on the roof rails, and if available, use a T-30 torx® bit and torque wrench and tighten the T-30 torx® head screws to 30 to 35 lbf·in (3.4 to 4.0 N·m, 0.35 to 0.41 kgf·m) of torque (or tighten securely with the torx® wrench provided).

Rear crossbar:

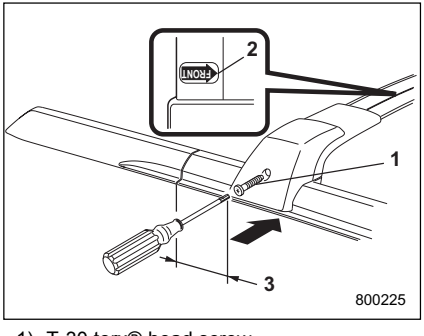

1) T-30 torx® head screw
2) Front arrow label
3) 6 in (150 mm)

Install the rear crossbar in the same manner as the front crossbar.

NOTE

The rear crossbar should be positioned 6 inches (150 mm) forward of the rear radius in the roof rail.

⚠ CAUTION

Do not carry cargo on the roof when the crossbars are removed. Luggage on the roof will be thrown forward or backward in sudden stops or rapid accelerations, resulting in a dangerous road hazard.

NOTE

Before each use of the roof crossbar, make sure the four T-30 crossbar clamp screws have been checked, and retightened if necessary to 30 to 35 lbf·in (3.4 to 4.0 N·m, 0.35 to 0.41 kgf·m), as outlined in Step #5 above.

Trailer hitch (if equipped)

The trailer hitch is designed to tow a Class 1 rated load.
When you tow a trailer, follow the instructions in the next section “Trailer towing”.

⚠ WARNING

- **Never exceed the maximum weight specified for the trailer hitch. Exceeding the maximum weight could cause an accident resulting in serious personal injuries. Permissible trailer weight changes depending on the situation. Refer to the next section “Trailer towing” for possible recommendations and limitations.**
- **Trailer brakes are required when the towing load exceeds 1,000 lbs (453 kg). Be sure your trailer has safety chains and that each chain will hold the trailer’s maximum gross weight. Towing trailers without safety chains could create a traffic safety hazard if the trailer separates from the hitch due to coupling damage or hitch ball damage.**
- **Be sure to check the hitch pin and safety pin for positive locking placement before towing a trailer. If the ball mount comes off the hitch receiver, the trailer could get loose and create a traffic safety hazard.**
- **Use only the ball mount supplied with this hitch. Use the hitch only as a weight carrying hitch. Do not use with any type of weight distributing hitch.**

■ Connecting a trailer

1. Remove the receiver cover from the hitch receiver tube. Then insert the ball mount into the hitch receiver tube.

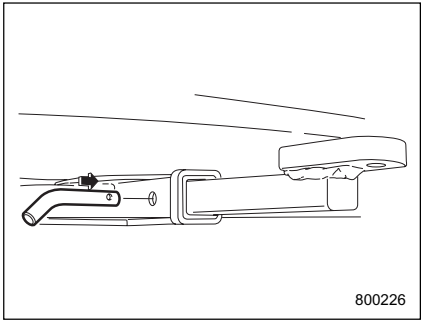

2. Insert the hitch pin into the hole on the hitch receiver tube so that the pin passes through the ball mount.

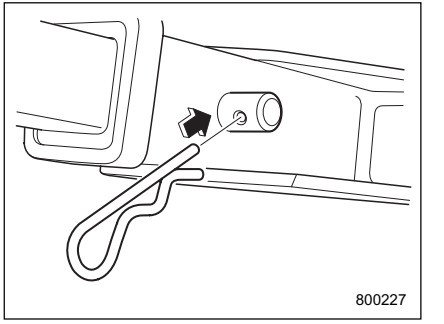

3. Insert the safety pin securely into the hitch pin.
4. Pull the ball mount to make sure it does not come off the hitch receiver.

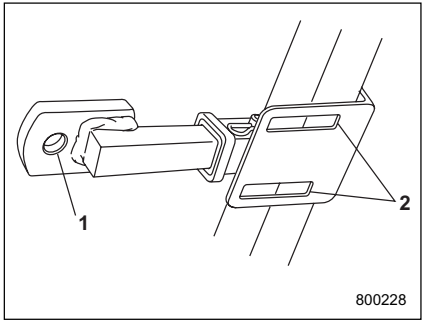

1) Hitch ball installation point
2) Hooks for safety chains

5. Use only a hitch ball that is appropriate for the ball mount and your trailer. The hitch ball must be securely installed on the ball mount.
6. Connect your trailer to the hitch ball.
7. Connect the trailer and the hitch with safety chains that will hold the trailer's maximum gross weight. The chains should cross under the trailer tongue to prevent the tongue from dropping onto the ground in case it should disconnect from the hitch ball. Allow sufficient slack in the chains taking tight-turn situations into account; however, be careful not to let them drag on the ground.

WARNING

Do not connect safety chains to part of the vehicle other than the safety chain hooks.

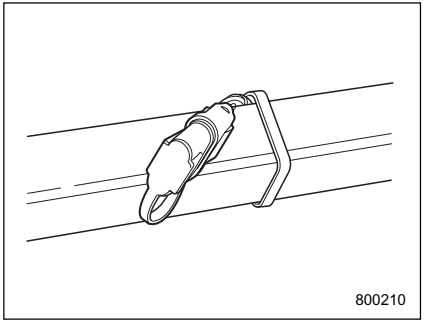

Hitch harness connector

8. Connect the hitch wire harness's black four-pin wire connector to the towing trailer's wire harness
9. Confirm proper function of the hitch wire harness by individually activating the brake, right turn signal, left turn signal, stop, and parking lights on the trailer.

NOTE

Always disconnect the trailer wire harness before launching or retrieving a watercraft.

■ When you do not tow a trailer

- Remove the ball mount from the hitch receiver tube and insert the receiver cover onto the hitch receiver tube.
- Place the dust cap over the fou-pin connector of the hitch wire harness to protect against possible damage.
- Occasionally lubricate terminals of the four-pin connector using terminal grease.

Trailer towing

Your vehicle is designed and intended to be used primarily as a passenger-carrying vehicle. Towing a trailer puts additional loads on your vehicle's engine, drivetrain, brakes, tires and suspension and has an adverse effect on fuel economy.
If you do decide to tow a trailer, your safety and satisfaction depend upon proper use of correct equipment and cautious operation of your vehicle. Seek the advice of your SUBARU dealer to assist you in purchasing a hitch and other necessary towing equipment appropriate for your vehicle. In addition, be sure to follow the instructions on correct installation and use provided by the trailer and other towing equipment manufacturers.
SUBARU assumes no responsibility for injuries or vehicle damage that result from trailer towing equipment, or from any errors or omissions in the instructions accompanying such equipment or for your failure to follow the proper instructions.

■ Warranties and maintenance

SUBARU warranties do not apply to vehicle damage or malfunction caused by trailer towing. If you use your vehicle to tow a trailer, more frequent maintenance will be required due to the additional load. (Refer to "Maintenance schedule under severe driving conditions" in the "Warranty and Maintenance Booklet".)
Under no circumstances should a trailer be towed with a new vehicle or a vehicle with any new powertrain component (engine, transmission, differential, wheel bearings, etc.) for the first 1,000 miles (1,600 km) of driving.

■ Maximum load limits

⚠ WARNING

Never exceed the maximum load limits explained in the following. Exceeding the maximum load limits could cause personal injury and/or vehicle damage.

⚠ CAUTION

- **Adequate size trailer brakes are required when the trailer and its cargo exceed 1,000 lbs (453 kg) total weight.**
- **Before towing a trailer, check the trailer total weight, GVW, GAWs and tongue load. Make sure the load and its distribution in your vehicle and trailer are acceptable.**

▼ Total trailer weight

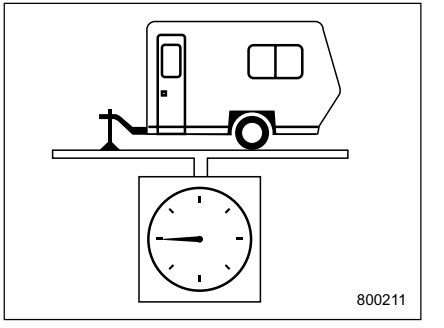

Total trailer weight

The total trailer weight (trailer weight plus its cargo load) must never exceed the maximum weight shown in the following table.

Model	Conditions	Maximum total trailer weight
MT models	When towing a trailer without brakes.	1,000 lbs (453 kg)
	When towing a trailer with brakes.	2,400 lbs (1,087 kg)
AT models	When towing a trailer without brakes.	1,000 lbs (453 kg)
	When towing a trailer with brakes.	2,400 lbs (1,087 kg)
	When towing a trailer on a long uphill grade continuously for over 5 miles (8 km) with an outside temperature of 104°F (40°C) or above.	1,000 lbs (453 kg)

▼ Gross Vehicle Weight (GVW) and Gross Vehicle Weight Rating (GVWR)

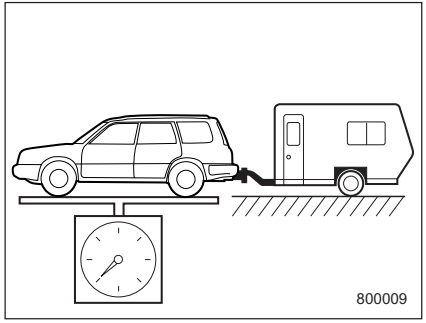

Gross Vehicle Weight

The Gross Vehicle Weight (GVW) must never exceed the Gross Vehicle Weight Rating (GVWR).
Gross Vehicle Weight (GVW) is the combined total of the weight of the vehicle, driver, passengers, luggage, trailer hitch, trailer tongue load and any other optional equipment installed on your vehicle. Therefore, the GVW changes depending on the situation. Determine the GVW each time before going on a trip by putting your vehicle and trailer on a vehicle scale.

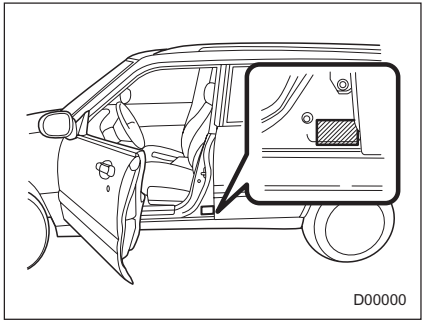

Certification label

GVWR is shown on the certification plate located on the driver's side door jamb.

– CONTINUED –

▼ Gross Axle Weight (GAW) and Gross Axle Weight Rating (GAWR)

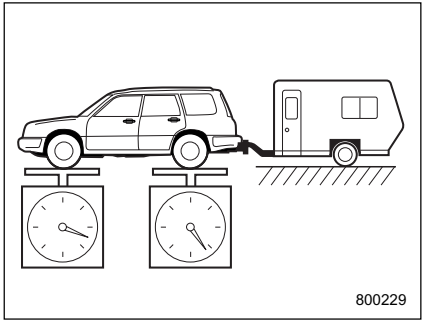

Gross Axle Weight

The total weight applied to each axle (GAW) must never exceed the Gross Axle Weight Rating (GAWR). The front and rear GAWs can be adjusted by relocating passengers and luggage inside the vehicle. The front and rear GAWR are also shown on the certification plate.
To check both GVWR and GAWR and to confirm that the total weight and weight distribution are within safe driving limits, you should have your vehicle and trailer weighed at a commercial weighing station.
Be sure that all cargo is firmly secured to prevent a change in weight distribution while driving.

▼ Tongue load

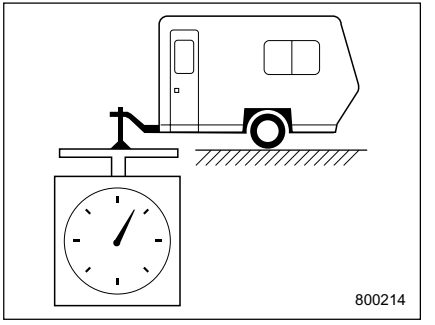

Tongue load

Ensure that the trailer tongue load is from 8 to 11 percent of the total trailer weight and does not exceed the maximum value of 200 lbs (90 kg).

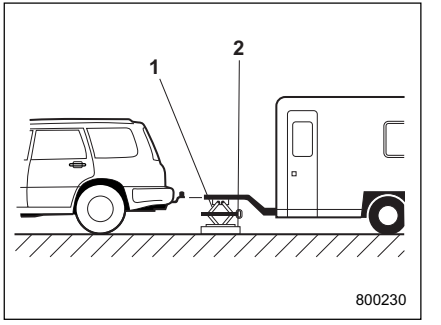

1) Jack
2) Bathroom scale

The tongue load can be weighed with a bathroom scale as shown in the illustration above. When weighing the tongue load, be sure to position the towing coupler at the height at which it would be during actual towing, using a jack as shown.

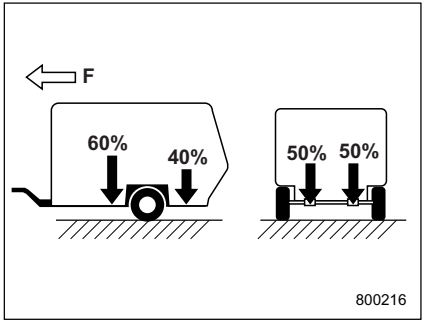

F: Front of vehicle

The tongue load can be adjusted by proper distribution of the load in the trailer. Never load the trailer with more weight in the back than in the front; approximately 60 percent of the trailer load should be in the front and approximately 40 percent in the rear. Also, distribute the load as evenly as possible on both the left and right sides.
Be sure that all cargo is firmly secured to prevent a change in weight distribution while driving.

WARNING

If the trailer is loaded with more weight in the back of trailer's axle than in the front, the load is taken off the rear axle of the towing vehicle. This may cause the rear wheels to skid, especially during braking or when vehicle speed is reduced during cornering, resulting in oversteer, spin out and/or jackknifing.

■ Trailer hitches

Choose a proper hitch for your vehicle and trailer.
The use of a genuine SUBARU trailer hitch is recommended. A genuine SUBARU hitch is available from your SUBARU dealer.
If use of a non-genuine hitch is unavoidable, be sure the hitch is suited to your vehicle and trailer. Consult with a professional hitch supplier to assist you in choosing an appropriate hitch for your vehicle. Be sure to follow all of the hitch manufacturer's instructions for installation and use.
Never use a hitch that mounts only to the rear bumper. The bumper is not designed to handle that type of load.
For all types of hitches, regularly check that the hitch mounting bolts and nuts are tight.

WARNING

Never drill the frame or under-body of your vehicle to install a commercial trailer hitch. If you do, dangerous exhaust gas, water or mud may enter the passenger compartment through the drilled hole. Exhaust gas contains carbon monoxide, a colorless and odorless gas which is dangerous, or even lethal, if inhaled. Also, drilling the frame or under-body of your vehicle could cause deterioration of strength of your vehicle and cause corrosion around the drilled hole.

CAUTION

- **Do not modify the vehicle exhaust system, brake system, or other systems when installing a hitch or other trailer towing equipment.**
- **Do not use axle-mounted hitches as they can cause damage to the axle housing, wheel bearings, wheels or tires.**

– CONTINUED –

■ Connecting a trailer

▼ Trailer brakes

If your trailer's total weight (trailer weight plus its cargo weight) exceeds 1,000 lbs (453 kg), the trailer is required to be equipped with its own brake system. Electric brakes or surge brakes are recommended, and must be installed properly. Check that your trailer's brakes conform with Federal, state/province and/or other applicable regulations. Your SUBARU's brake system is not designed to be tapped into the trailer's hydraulic brake system. Please ask your SUBARU dealer and professional trailer supplier for more information about the trailer's brake system.

⚠ WARNING

- **Adequate size trailer brakes are required when the trailer and its cargo exceed 1,000 lbs (453 kg) total weight.**
- **Do not directly connect your trailer's hydraulic brake system to the hydraulic brake system in your vehicle. Direct connection would cause the vehicle's brake performance to deteriorate and could lead to an accident.**

▼ Trailer safety chains

In case the trailer hitch connector or hitch ball should break or become disconnected, the trailer could get loose and create a traffic safety hazard.
For safety, always connect the towing vehicle and trailer with trailer safety chains. Pass the chains crossing each other under the trailer tongue to prevent the trailer from dropping onto the ground in case the trailer tongue should disconnect from the hitch ball. Allow sufficient slack in the chains taking tight-turn situations into account; however, be careful not to let them drag on the ground.
For more information about the safety chain connection, refer to the instructions for your hitch and trailer.

⚠ WARNING

Always use safety chains between your vehicle and the trailer. Towing a trailer without safety chains could create a traffic safety hazard if the trailer separates from the hitch due to coupling damage or hitch ball damage.

▼ Side mirrors

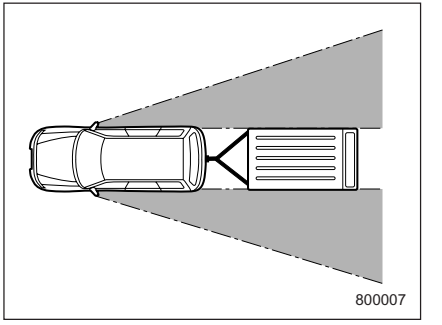

After hitching a trailer to your vehicle, check that the standard side mirrors provide a good rearward field of view without significant blind spots. If significant blind spots occur with the vehicle's standard side mirrors, use towing mirrors that conform with Federal, state/province and/or other applicable regulations.

▼ Trailer lights

Connection of trailer lights to your vehicle's electrical system requires modifications to the vehicle's lighting circuit to increase its capacity and accommodate wiring changes. To ensure the trailer lights are connected properly, please consult your SUBARU dealer. Check for proper operation of the turn signals, the brake

lights and parking lights each time you hitch up.

⚠ CAUTION

Direct splicing or other improper connection of trailer lights may damage your vehicle's electrical system and cause a malfunction of your vehicle's lighting system.

▼ Tires

Make sure that all the tires on your vehicle are properly inflated to the pressure specified on the tire placard located on the driver's side center pillar.

Trailer tire condition, size, load rating and proper inflation pressure should be in accordance with the trailer manufacturer's specifications.

■ Trailer towing tips

⚠ CAUTION

- **Never exceed 45 mph (72 km/h) when towing a trailer in hilly country on hot days.**
- **When towing a trailer, steering, stability, stopping distance and braking performance will be different from normal operation. For safety's sake, you should employ extra caution when towing a trailer and you should never speed. You should also keep the following tips in mind:**

▼ Before starting out on a trip

- Check that the vehicle and vehicle-to-hitch mounting are in good condition. If any problems are apparent, do not tow the trailer.
- Check that the vehicle sits horizontally with the trailer attached. If the vehicle is tipped sharply up at the front and down at the rear, check the total trailer weight, GVW, GAWs and tongue load again, then confirm that the load and its distribution are acceptable.
- Check that the tire pressures are correct.
- Check that the vehicle and trailer are connected properly. Confirm that
  - the trailer tongue is connected properly to the hitch ball.
  - the trailer lights connector is connected properly and trailer's brake lights illuminate when the vehicle's brake pedal is pressed, and that the trailer's turn signal lights flash when the vehicle's turn signal lever is operated.
  - the safety chains are connected properly.
  - all cargo in the trailer is secured safety in position.
  - the side mirrors provide a good rearward field of view without a significant blind spot.
- Sufficient time should be taken to learn the "feel" of the vehicle/trailer combination before starting out on a trip. In an area free of traffic, practice turning, stopping and backing up.

▼ Driving with a trailer

- You should allow for considerably more stopping distance when towing a trailer. Avoid sudden braking because it may result in skidding or jackknifing and loss of control.
- Avoid abrupt starts and sudden accelerations. If your vehicle has a manual transmission, always start out in first gear and release the clutch at moderate engine revolution.
- Avoid uneven steering, sharp turns and rapid lane changes.
- Slow down before turning. Make a longer than normal turning radius because the trailer wheels will be closer than the vehicle wheels to the inside of the turn. In a

– CONTINUED –

tight turn, the trailer could hit your vehicle.
• Crosswinds will adversely affect the handling of your vehicle and trailer, causing sway. Crosswinds can be due to weather conditions or the passing of large trucks or buses. If swaying occurs, firmly grip the steering wheel and slow down immediately but gradually.
• When passing other vehicles, considerable distance is required because of the added weight and length caused by attaching the trailer to your vehicle.

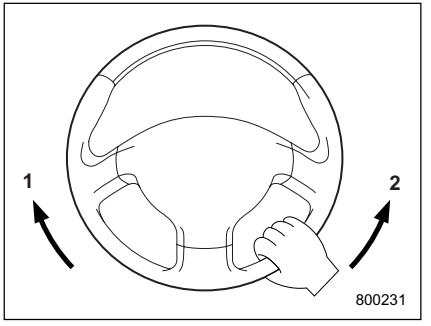

1) Left turn
2) Right turn

• Backing up with a trailer is difficult and takes practice. When backing up with a trailer, never accelerate or steer rapidly. When turning back, grip the bottom of the steering wheel with one hand and turn it to the left for a left turn, and turn it to the right for a right turn.
• If the ABS warning light illuminates while the vehicle is in motion, stop towing the trailer and have repairs performed immediately by the nearest SUBARU dealer.

▼ Driving on grades

• Before going down a steep hill, slow down and shift into lower gear (if necessary, use 1st gear) in order to utilize the engine braking effect and prevent overheating of your vehicle's brakes. Do not make sudden downshifts.
• When driving uphill in hot weather, the air conditioner may turn off automatically to protect the engine from overheating.
• When driving uphill in hot weather, pay attention to the water temperature gauge pointer (for all vehicles) and AT OIL TEMP warning light (for AT vehicles) since the engine and transmission are relatively prone to overheating under these conditions. If the water temperature gauge pointer approaches the OVERHEAT zone or the AT OIL TEMP warning light illuminates, immediately switch off the air conditioner and stop the vehicle at the nearest safe place. Refer to the "Engine overheating" section in chapter 9, and "Warning and indicator lights" section in chapter 3.
• If your vehicle has an automatic transmission, avoid using the accelerator pedal to stay stationary on an uphill slope instead of using the parking brake or foot brake. That may cause the transmission fluid to overheat.
• If your vehicle has an automatic transmission, place the selector lever as follows:
Uphill slopes: "D" position
Downhill slopes: A low-speed gear position to use engine braking

▼ Parking on a grade

Always block the wheels under both vehicle and trailer when parking. Apply the parking brake firmly. You should not park on a hill or slope. But if parking on a hill or slope cannot be avoided, you should take the following steps:
1. Apply the brakes and hold the pedal down.
2. Have someone place wheel blocks under both the vehicle and trailer wheels.
3. When the wheel blocks are in place, release the regular brakes slowly until the blocks absorb the load.
4. Apply the regular brakes and then apply the parking brake; slowly release the regular brakes.
5. Shift into 1st or reverse gear (manual transmission) or "P" (automatic transmis-

sion) and shut off the engine.

If you park your vehicle in case of an emergency 9-2
Temporary spare tire (if equipped) 9-2
Flat tires 9-3
Changing a flat tire 9-3
Jump starting 9-7
How to jump start 9-8
Engine overheating 9-10
If steam is coming from the engine compartment 9-10
If no steam is coming from the engine compartment 9-10
Towing 9-10
Towing and tie-down hooks 9-11
Using a flat-bed truck 9-12
Towing with all wheels on the ground 9-12
Rear gate – if the rear gate cannot be unlocked 9-13
Moonroof – if the moonroof cannot be closed 9-14
Maintenance tools 9-14
Jack and jack handle 9-15

If you park your vehicle in case of an emergency

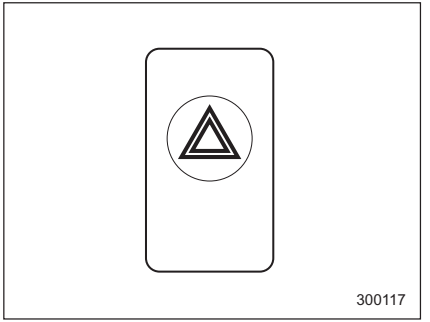

The hazard warning flasher should be used in day or night to warn other drivers when you have to park your vehicle under emergency conditions.
Avoid stopping on the road. It is best to safely pull off the road if a problem occurs.

The hazard warning flasher can be activated regardless of the ignition switch position.
Turn on the hazard warning by pushing the hazard warning flasher switch. Turn it off by pushing the switch again.

NOTE

When the hazard warning flasher is on, the turn signals do not work.

Temporary spare tire (if equipped)

WARNING

Never tow a trailer when the temporary spare tire is used. The temporary spare tire is not designed to sustain the towing load. Use of the temporary spare tire when towing can result in failure of the spare tire and/or less stability of the vehicle and may lead to an accident.

CAUTION

Never use any temporary spare tire other than the original. Using other sizes may result in severe mechanical damage to the drive train of your vehicle.

The temporary spare tire is smaller and lighter than a conventional tire and is designed for emergency use only. Remove the temporary spare tire and re-install the conventional tire as soon as possible because the spare tire is designed only for temporary use.

Check the inflation pressure of the temporary spare tire periodically to keep the tire

ready for use. The correct pressure is **60 psi (420 kPa, 4.2 kg/cm^2)**.

When using the temporary spare tire, note the following.

- Do not exceed 50 mph (80 km/h).
- Do not put a tire chain on the temporary spare tire. Because of the smaller tire size, a tire chain will not fit properly.
- Do not use two or more temporary spare tires at the same time.
- Do not drive over obstacles. This tire has a smaller diameter, so road clearance is reduced.

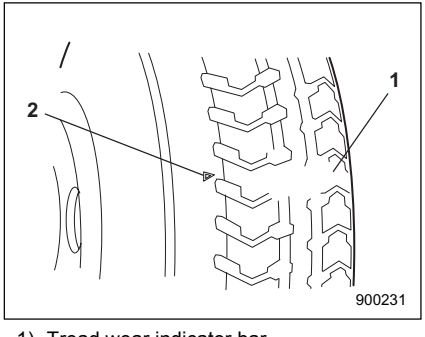

1) Tread wear indicator bar
2) Indicator location mark

- When the wear indicator appears on the tread, replace the tire.

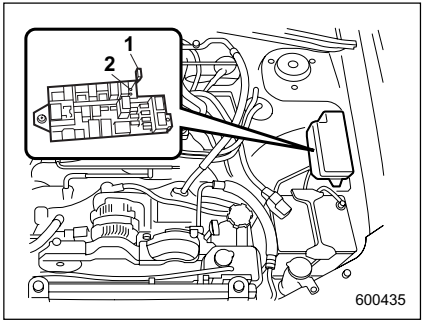

1) Spare fuse
2) FWD connector

NOTE

(All AWD AT non-turbo models without Vehicle Dynamics Control system) Before driving your vehicle with the temporary spare tire, put a spare fuse inside the FWD connector in the main fuse box located in the engine compartment and confirm that the Front-wheel drive warning light "AWD" in the combination meter comes on. The all wheel drive capability of the vehicle has now deactivated. After re-installing the conventional tire, remove the spare fuse from the FWD connector in order to reactivate all wheel drive.

Flat tires

If you have a flat tire while driving, never brake suddenly; keep driving straight ahead while gradually reducing speed. Then slowly pull off the road to a safe place.

■ Changing a flat tire

⚠ WARNING

- **Do not jack up the vehicle on an incline or a loose road surface. The jack can come out of the jacking point or sink into the ground and this can result in a severe accident.**
- **Use only the jack provided with your vehicle. The jack supplied with the vehicle is designed only for changing a tire. Never get under the vehicle while supporting the vehicle with this jack.**

– CONTINUED –

- **Always turn off the engine before raising the flat tire off the ground using the jack. Never swing or push the vehicle supported with the jack. The jack can come out of the jacking point due to a jolt and this can result in a severe accident.**

1. Park on a hard, level surface, whenever possible, then stop the engine.
2. Set the parking brake securely and shift a manual transmission vehicle in reverse or an automatic transmission vehicle in the “P” (Park) position.
3. Turn on the hazard warning flasher and have everyone get out of the vehicle.

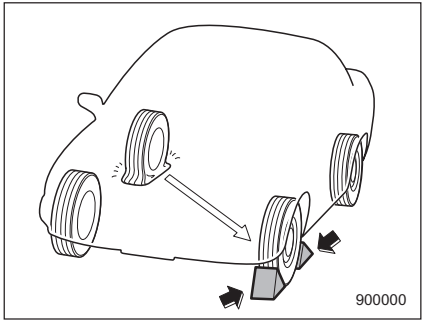

4. Put wheel blocks at the front and rear of the tire diagonally opposite the flat tire.

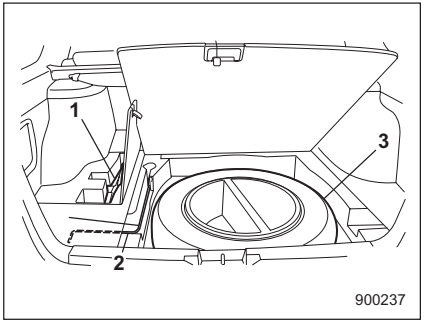

1) Jack
2) Jack handle
3) Spare tire

5. Take out the spare tire, jack, and wheel nut wrench.
The spare tire is stored under the floor of the cargo area.

To remove the spare tire:
1. Open the lid and hang the hook provided on the under side of the lid on the rear edge of the roof to keep the lid open.

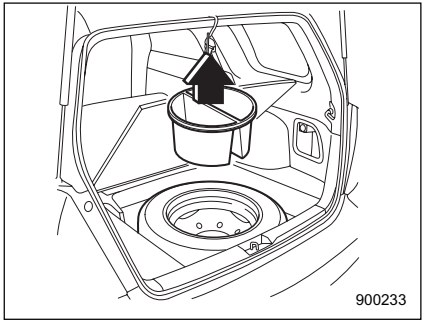

2. Remove the storage compartment bucket (Canada spec. non-turbo models).

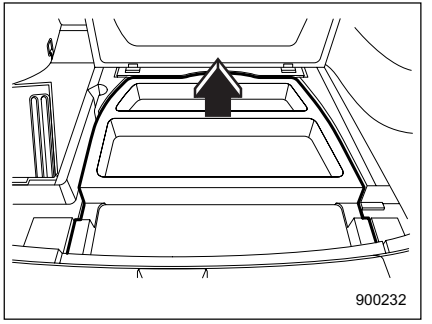

3. Remove the storage compartment tray (Except Canada spec. non-turbo models).
4. Turn the attaching bolt counterclockwise, then take spare tire out.

5. The jack is stored under the left side of the cargo floor.

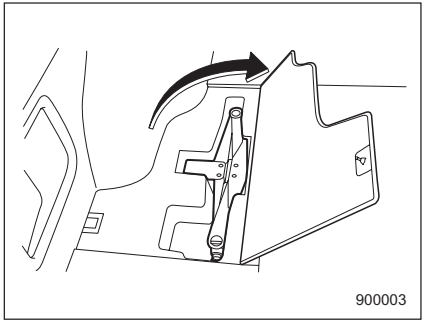

To take out the jack:
Pull the tab to open the lid, turn the jack screw counterclockwise to loosen it, then remove the jack.

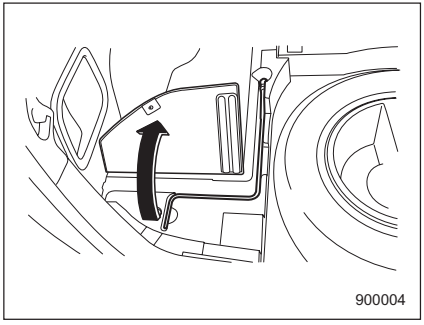

To take out the jack handle:
Open the rear-left and center lids in the cargo area by pulling their tabs.

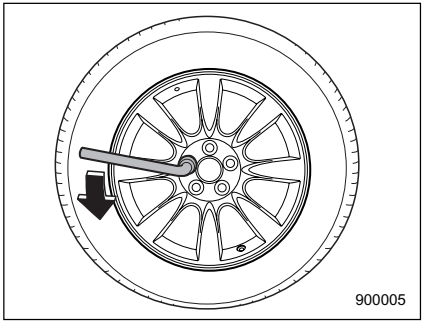

6. Loosen the wheel nuts using the wheel nut wrench but do not remove the nuts.

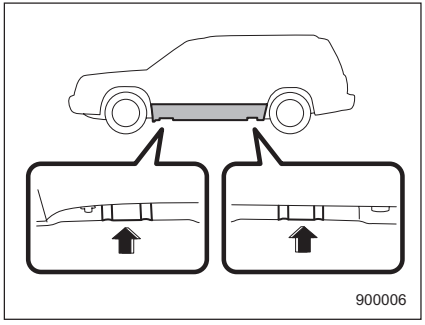

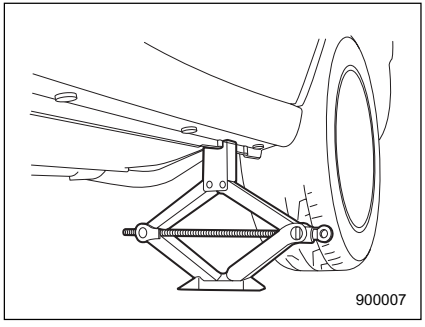

7. Place the jack under the side sill at the front or rear jack-up point closest to the flat tire.
Turn the jackscrew by hand until the jack head engages firmly into the jack-up point.

– CONTINUED –

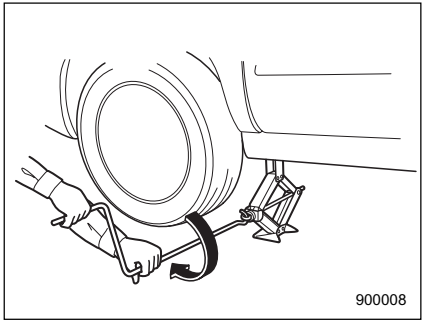

8. Insert the jack handle into the jack-screw, and turn the handle until the tire clears the ground. Do not raise the vehicle higher than necessary.
9. Remove the wheel nuts and the flat tire.

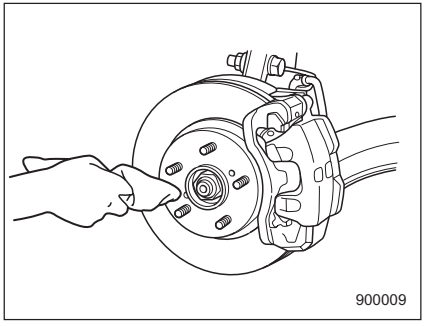

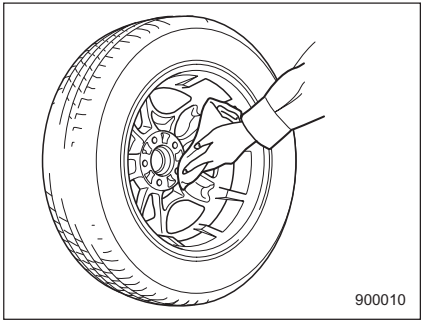

10.Before putting the spare tire on, clean the mounting surface of the wheel and hub with a cloth.
11.Put on the spare tire. Replace the wheel nuts. Tighten them by hand.

⚠ WARNING

Do not use oil or grease on the wheel studs or nuts when the spare tire is installed. This could cause the nuts to become loose and lead to an accident.

12.Turn the jack handle counterclockwise to lower the vehicle.

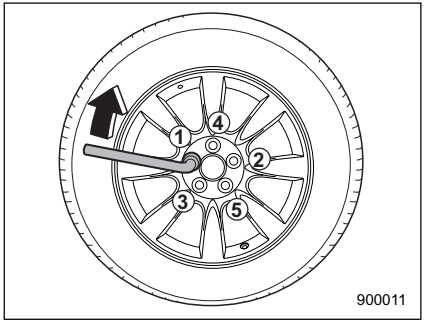

13.Use the wheel nut wrench to securely tighten the wheel nuts to the specified torque, following the tightening order in the illustration.
The torque for tightening the nuts is 58 to 72 lbf·ft (80 to 100 N·m, 8 to 10 kgf·m). This torque is equivalent to applying about 88 to 110 lbs (40 to 50 kg) at the top of the wheel nut wrench. Never use your foot on the wheel nut wrench or a pipe extension on the wrench because you may exceed the specified torque. Have the wheel nut torque checked at the nearest automotive service facility.

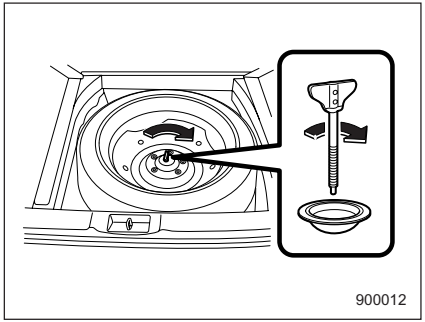

14.Store the flat tire in the spare tire compartment.
Put the spacer and tighten the attaching bolt firmly.
Also store the jack and wheel nut wrench in their storage locations.

⚠ WARNING

Never place a tire or tire changing tools in the passenger compartment after changing wheels. In a sudden stop or collisions, loose equipment could strike occupants and cause injury. Store the tire and all tools in the proper place.

Jump starting

⚠ WARNING

- **Battery fluid is SULFURIC ACID. Do not let it come in contact with the eyes, skin, clothing or the vehicle.**
  If battery fluid gets on you, thoroughly flush the exposed area with water immediately. Get medical help if the fluid has entered your eyes.
  If battery fluid is accidentally swallowed, immediately drink a large amount of milk or water, and obtain immediate medical help.
  Keep everyone including children away from the battery.
- **The gas generated by a battery explodes if a flame or spark is brought near it. Do not smoke or light a match while jump starting.**
- **Never attempt jump starting if the discharged battery is frozen. It could cause the battery to burst or explode.**
- **Whenever working on or around a battery, always wear suitable eye protectors, and remove metal objects such as rings, bands or other metal jewelry.**
- **Be sure the jumper cables and clamps on them do not have loose or missing insulation.**
  Do not jump start unless cables in suitable condition are available.
- **A running engine can be dangerous. Keep your fingers, hands, clothing, hair and tools away from the cooling fan, belts and any other moving engine parts. Removing rings, watches and ties is advisable.**
- **Jump starting is dangerous if it is done incorrectly. If you are unsure about the proper procedure for jump starting, consult a competent mechanic.**

When your vehicle does not start due to a run down (discharged) battery, the vehicle may be jump started by connecting your battery to another battery (called the booster battery) with jumper cables.

– CONTINUED –

■ How to jump start

1. Make sure the booster battery is 12 volts and the negative terminal is grounded.
2. If the booster battery is in another vehicle, do not let the two vehicles touch.
3. Turn off all unnecessary lights and accessories.
4. Connect the jumper cables exactly in the sequence illustrated.

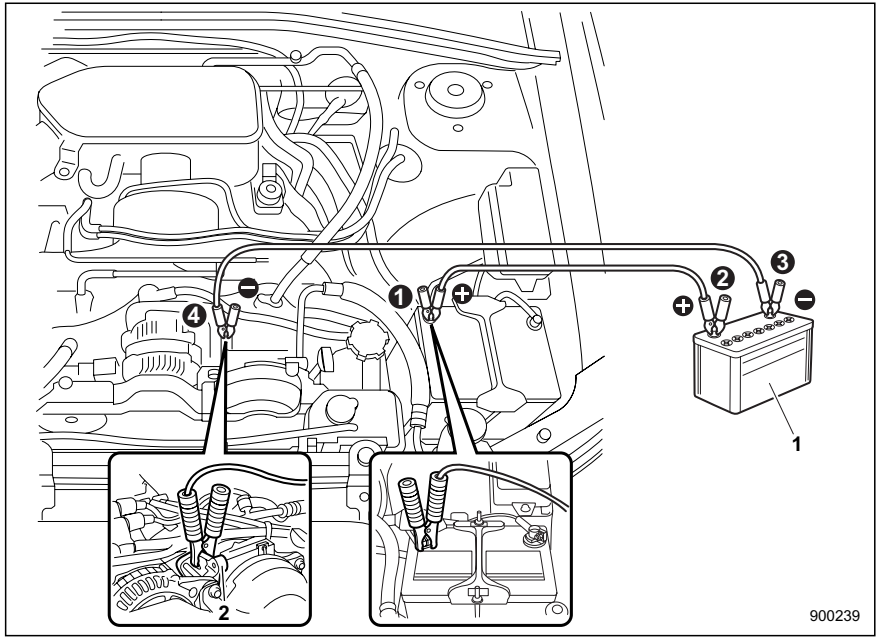

1) Booster battery
2) Engine lifting bracket

1) Connect one jumper cable to the positive (+) terminal on the discharged battery.
2) Connect the other end of the jumper cable to the positive (+) terminal of the booster battery.
3) Connect one end of the other cable to the negative (–) terminal of the booster battery.
4) Connect the other end of the cable to the engine lifting bracket.

Make sure that the cables are not near any moving parts and that the cable clamps are not in contact with any other metal.

5. Start the engine of the vehicle with the booster battery and run it at moderate speed. Then start the engine of the vehicle that has the discharged battery.
6. When finished, carefully disconnect the cables in exactly the reverse order.

Engine overheating

⚠ WARNING

Never attempt to remove the radiator cap until the engine has been shut off and has fully cooled down. When the engine is hot, the coolant is under pressure. Removing the cap while the engine is still hot could release a spray of boiling hot coolant, which could burn you very seriously.

If the engine overheats, safely pull off the road and stop the vehicle in a safe place.

■ If steam is coming from the engine compartment

Turn off the engine and get everyone away from the vehicle until it cools down.

■ If no steam is coming from the engine compartment

1. Keep the engine running at idling speed.
2. Open the hood to ventilate the engine compartment.
Confirm that the cooling fan is turning. If the fan is not turning, immediately turn off the engine and contact your authorized dealer for repair.
3. After the engine coolant temperature has dropped, turn off the engine.
If the temperature gauge stays at the overheated zone, turn off the engine.
4. After the engine has fully cooled down, check the coolant level in the reserve tank.
If the coolant level is below the “LOW” mark, add coolant up to the “FULL” mark.
5. If there is no coolant in the reserve tank, add coolant to the reserve tank. Then remove the radiator cap and fill the radiator with coolant.

If you remove the radiator cap from a hot radiator, first wrap a thick cloth around the radiator cap, then turn the cap counter-clockwise slowly without pressing down until it stops. Release the pressure from the radiator. After the pressure has been fully released, remove the cap by pressing down and turning it.

Towing

If towing is necessary, it is best done by your SUBARU dealer or a commercial towing service. Observe the following procedures for safety.

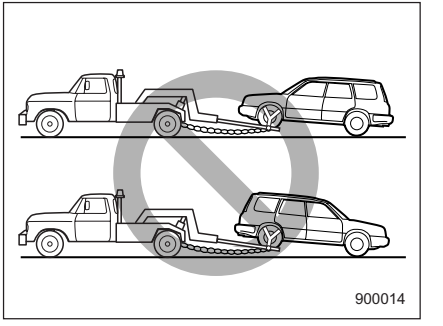

⚠ WARNING

Never tow AWD vehicles (both AT and MT) with the front wheels raised off the ground while the rear wheels are on the ground, or with the rear wheels raised off the ground while the front wheels are on the ground. This will cause the vehicle to spin away due to the operation or deterioration of the center differential.

■ Towing and tie-down hooks

The towing hooks should be used only in an emergency (e.g., to free a stuck vehicle from mud, sand or snow).

Front towing hook:

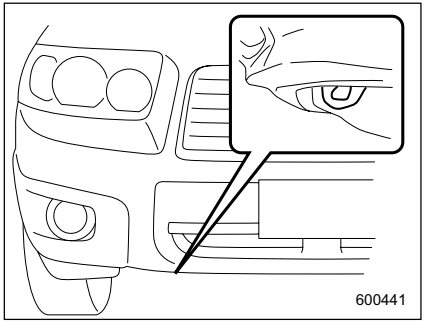

Rear towing hook:

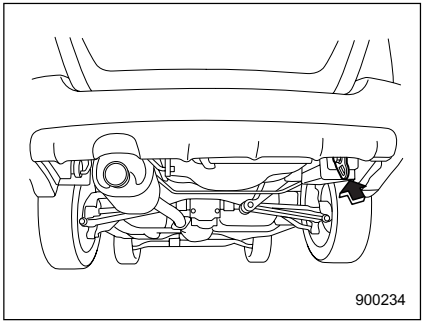

⚠ CAUTION

To prevent deformation to the front bumper and the towing hook, do not apply excessive lateral load to the towing hooks.

Tie-down hooks:

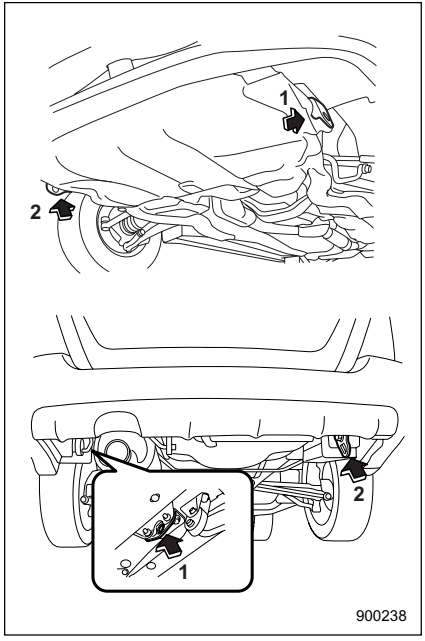

1) Tie-down hooks
2) Towing and tie-down hooks

– CONTINUED –

CAUTION

- **Use only the specified towing hooks and tie-down hooks. Never use suspension parts or other parts of the body for towing or tie-down purposes.**
- **Never use the tie-down hook on the underside of the vehicle closest to the muffler for towing purposes.**

■ Using a flat-bed truck

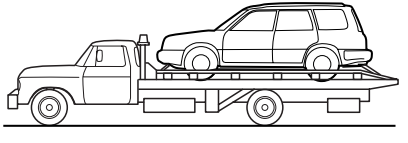

900018

This is the best way to transport your vehicle. Use the following procedures to ensure safe transportation.

1. Shift the selector lever into the “P” position for automatic transmission vehicles or “1st” for manual transmission vehicles.
2. Pull up the parking brake lever firmly.
3. Secure the vehicle onto the carrier properly with safety chains. Each safety chain should be equally tightened and care must be taken not to pull the chains so tightly that the suspension bottoms out.

■ Towing with all wheels on the ground

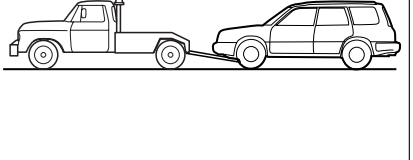

900019

1. Check the transmission and differential oil levels and add oil to bring it to the upper level if necessary.
2. Release the parking brake and put the transmission in neutral.
3. The ignition switch should be in the “ACC” position while the vehicle is being towed.
4. Take up slack in the towline slowly to prevent damage to the vehicle.

WARNING

- **Never turn the ignition switch to the “LOCK” position while the vehicle is being towed because the steering wheel and the direction of the wheels will be locked.**
- **Remember that the brake booster and power steering do not function when the engine is not running. Because the engine is turned off, it will take greater effort to operate the brake pedal and steering wheel.**

CAUTION

- **If transmission failure occurs, transport your vehicle on a flat-bed truck.**
- **Do not run the engine while being towed using this method. Transmission damage could result if the vehicle is towed with the engine running.**

- **For vehicles with automatic transmission, the traveling speed must be limited to less than 20 mph (30 km/h) and the traveling distance to less than 31 miles (50 km). For greater speeds and distances, transport your vehicle on a flatbed truck.**

Rear gate – if the rear gate cannot be unlocked

In the event that you cannot unlock the rear gate by operating the power door locking switches or the remote keyless entry system, you can unlock it from inside the cargo area.

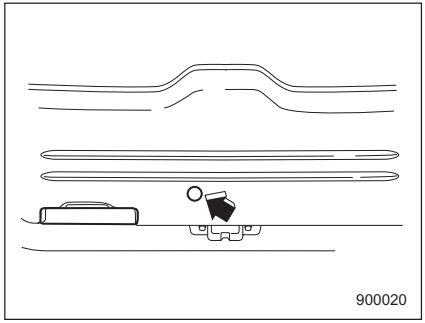

1. Remove the access cover at the bottom-center of the rear gate trim.

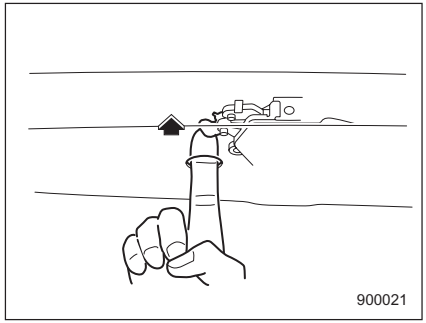

2. Locate the rear gate lock release lever behind the rear gate trim panel.
3. Unlock the rear gate by pressing the lever inside the trim upward.
4. Open the rear gate from outside by raising the rear gate handle.

Moonroof – if the moonroof cannot be closed

If the moonroof cannot be closed with the moonroof switch, you can close the moonroof manually.

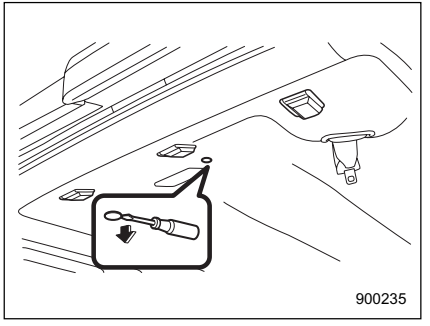

1. Remove the plug on the roof trim located to the rear of the moonroof by inserting the end of the flat-head screwdriver between the roof and plug and prying it off.

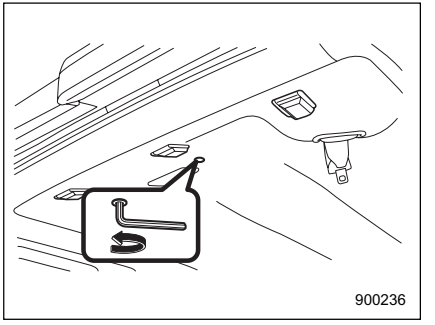

2. Insert a hex-headed wrench in the end of the motor shaft.
To close the moonroof, turn the wrench counterclockwise.
Have your vehicle checked and repaired by an authorized SUBARU dealer.

Maintenance tools

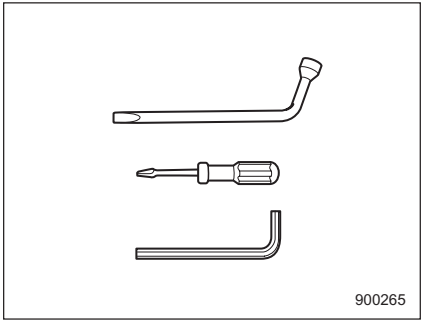

Your vehicle is equipped with the following maintenance tools:

Screwdriver
Wheel nut wrench
Hex-head wrench (for vehicle with moonroof)

■ Jack and jack handle

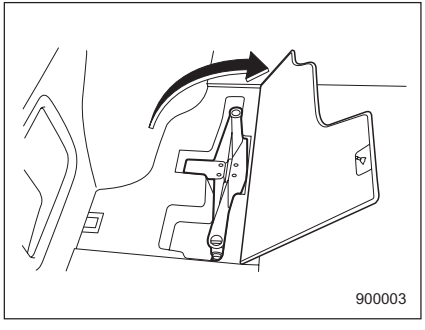

The jack is stored under the left side of the cargo floor.

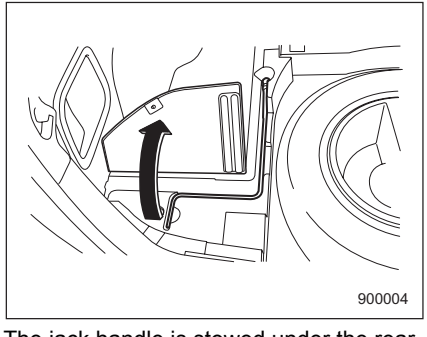

The jack handle is stowed under the rear-left and center lids in the cargo area.

For how to use the jack, refer to the “Flat tires” section in this chapter.

Appearance care

Exterior care **10-2**
- **Washing** **10-2**
- **Waxing and polishing** **10-3**
- **Cleaning aluminum wheels** **10-3**

Corrosion protection **10-3**
- **Most common causes of corrosion** **10-3**
- **To help prevent corrosion** **10-4**

Cleaning the interior **10-4**
- **Seat fabric** **10-4**
- **Leather seat materials** **10-5**
- **Synthetic leather upholstery** **10-5**
- **Ashtray** **10-5**
- **Climate control panel, audio panel, instrument panel, console panel, switches, combination meter, and other plastic surfaces** **10-5**

Exterior care

■ Washing

⚠ CAUTION

- **When washing the vehicle, the brakes may get wet. As a result, the brake stopping distance will be longer. To dry the brakes, drive the vehicle at a safe speed while lightly pressing the brake pedal to heat up the brakes.**
- **Do not wash the engine compartment and area adjacent to it. If water enters the engine air intake, electrical parts or the power steering fluid reservoir, it will cause engine trouble or faulty power steering respectively.**
- **Since your vehicle is equipped with a rear wiper, automatic car-wash brushes could become tangled around it, damaging the wiper arm and other components. Ask the automatic car-wash operator not to let the brushes touch the wiper arm or to fix the wiper arm on the rear window glass with adhesive tape before operating the machine.**

NOTE

When having your vehicle washed in an automatic car wash, make sure beforehand that the car wash is of suitable type.

The best way to preserve your vehicle's beauty is frequent washing. Wash the vehicle at least once a month to avoid contamination by road grime.

Wash dirt off with a wet sponge and plenty of lukewarm or cold water. Do not wash the vehicle with hot water and in direct sunlight.

Salt, chemicals, insects, tar, soot, tree sap and bird droppings should be washed off by using a light detergent, as required. If you use a light detergent, make certain that it is a neutral detergent. Do not use strong soap or chemical detergents. All cleaning agents should be promptly flushed from the surface and not allowed to dry there. Rinse the vehicle thoroughly with plenty of lukewarm water. Wipe the remaining water off with a chamois or soft cloth.

▼ Washing the underbody

Chemicals, salts and gravel used for deicing road surfaces are extremely corrosive, accelerating the corrosion of underbody components, such as the exhaust system, fuel and brake lines, brake cables, floor pan and fenders, and suspension.
Thoroughly flush the underbody and inside of the fenders with lukewarm or cold water at frequent intervals to reduce the harmful effects of such agents.

Mud and sand adhering to the underbody components may accelerate their corrosion.
After driving off-road or muddy or sandy roads, wash the mud and sand off the underbody.
Carefully flush the suspension and axle parts, as they are particularly prone to mud and sand buildup. Do not use a sharp-edged tool to remove caked mud.

NOTE

Be careful not to damage brake hoses, sensor harnesses, and other parts when washing suspension components.

▼ Using a warm water washer

- Keep a good distance of 12 in (30 cm) or more between the washer nozzle and the vehicle.
- Do not wash the same area continuously.
- If a stain will not come out easily, wash by hand. Some warm water washers are

of the high temperature, high pressure type, and they can damage or deform the resin parts such as mouldings, or cause water to leak into the vehicle.

■ Waxing and polishing

Always wash and dry the vehicle before waxing and polishing.
Use a good quality polish and wax and apply them according to the manufacturer's instructions. Wax or polish when the painted surface is cool.

Be sure to polish and wax the chrome trim, as well as the painted surfaces. Loss of wax on a painted surface leads to loss of the original luster and also quickens the deterioration of the surface. It is recommended that a coat of wax be applied at least once a month, or whenever the surface no longer repels water.

If the appearance of the paint has diminished to the point where the luster or tone cannot be restored, lightly polish the surface with a fine-grained compound. Never polish just the affected area, but include the surrounding area as well. Always polish in only one direction. A No. 2000 grain compound is recommended. Never use a coarse-grained compound. Coarser grained compounds have a smaller grain-size number and could damage the paint. After polishing with a compound, coat with wax to restore the original luster. Frequent polishing with a compound or an incorrect polishing technique will result in removing the paint layer and exposing the undercoat. When in doubt, it is always best to contact your SUBARU dealer or an auto paint specialist.

NOTE

Be careful not to block the windshield washer nozzles with wax when waxing the vehicle.

■ Cleaning aluminum wheels

- Promptly wipe the aluminum wheels clean of any kind of grime or agent. If dirt is left on too long, it may be difficult to clean off.
- Do not use soap containing grit to clean the wheels. Be sure to use a neutral cleaning agent, and later rinse thoroughly with water. Do not clean the wheels with a stiff brush or expose them to a high-speed washing device.
- Clean the vehicle (including the aluminum wheels) with water as soon as possible when it has been splashed with sea water, exposed to sea breezes, or driven on roads treated with salt or other agents.

Corrosion protection

Your SUBARU has been designed and built to resist corrosion. Special materials and protective finishes have been used on most parts of the vehicle to help maintain fine appearance, strength, and reliable operation.

■ Most common causes of corrosion

The most common causes of corrosion are:
1. The accumulation of moisture retaining dirt and debris in body panel sections, cavities, and other areas.
2. Damage to paint and other protective coatings caused by gravel and stone chips or minor accidents.

Corrosion is accelerated on the vehicle when:
1. It is exposed to road salt or dust control chemicals, or used in coastal areas where there is more salt in the air, or in areas where there is considerable industrial pollution.
2. It is driven in areas of high humidity, especially when temperatures range just above freezing.
3. Dampness in certain parts of the vehicle remains for a long time, even though

– CONTINUED –

other parts of the vehicle may be dry.
4. High temperatures will cause corrosion to parts of the vehicle which cannot dry quickly due to lack of proper ventilation.

■ To help prevent corrosion

Wash the vehicle regularly to prevent corrosion of the body and suspension components. Also, wash the vehicle promptly after driving on any of the following surfaces:

- roads that have been salted to prevent them from freezing in winter
- mud, sand, or gravel
- coastal roads

After the winter has ended, it is recommended that the underbody be given a very thorough washing.

Before the beginning of winter, check the condition of underbody components, such as the exhaust system, fuel and brake lines, brake cables, suspension, steering system, floor pan, and fenders. If any of them are found to be rusted, they should be given an appropriate rust prevention treatment or should be replaced. Contact your SUBARU dealer to perform this kind of maintenance and treatment if you need assistance.

Repair chips and scratches in the paint as soon as you find them.

Check the interior of the vehicle for water and dirt accumulation under the floor mats because that could cause corrosion. Occasionally check under the mats to make sure the area is dry.
Keep your garage dry. Do not park your vehicle in a damp, poorly ventilated garage. In such a garage, corrosion can be caused by dampness. If you wash the vehicle in the garage or put the vehicle into the garage when wet or covered with snow, that can cause dampness.

If your vehicle is operated in cold weather and/or in areas where road salts and other corrosive materials are used, the door hinges and locks, trunk lid lock, and hood latch should be inspected and lubricated periodically.

Cleaning the interior

Use a soft, damp cloth to clean the climate control panel, audio equipment, instrument panel, center console, combination meter panel, and switches. (Do not use organic solvents.)

■ Seat fabric

Remove loose dirt, dust or debris with a vacuum cleaner. If the dirt is caked on the fabric or hard to remove with a vacuum cleaner, use a soft blush then vacuum it.
Wipe the fabric surface with a tightly wrung cloth and dry the seat fabric thoroughly. If the fabric is still dirty, wipe using a solution of mild soap and lukewarm water then dry thoroughly.

If the stain does not come out, try a commercially-available fabric cleaner. Use the cleaner on a hidden place and make sure it does not affect the fabric adversely. Use the cleaner according to its instructions.

NOTE

When cleaning the seat, do not use benzine, paint thinner, or any similar materials.

■ Leather seat materials

The leather used by SUBARU is a high quality natural product which will retain its distinctive appearance and feel for many years with proper care.
Allowing dust or road dirt to build up on the surface can cause the material to become brittle and to wear prematurely. Regular cleaning with a soft, moist, natural fiber cloth should be performed monthly, taking care not to soak the leather or allow water to penetrate the stitched seams.
A mild detergent suitable for cleaning woolen fabrics may be used to remove difficult dirt spots, rubbing with a soft, dry cloth afterwards to restore the luster. If your SUBARU is to be parked for a long time in bright sunlight, it is recommended that the seats and headrests be covered, or the windows shaded, to prevent fading or shrinkage.
Minor surface blemishes or bald patches may be treated with a commercial leather spray lacquer. You will discover that each leather seat section will develop soft folds or wrinkles, which is characteristic of genuine leather.

■ Synthetic leather upholstery

The synthetic leather material used on the SUBARU may be cleaned using mild soap or detergent and water, after first vacuuming or brushing away loose dirt. Allow the soap to soak in for a few minutes and wipe off with a clean, damp cloth. Commercial foam-type cleaners suitable for synthetic leather materials may be used when necessary.

NOTE

Strong cleaning agents such as solvents, paint thinners, window cleaner or gasoline must never be used on leather or synthetic interior materials.

■ Ashtray

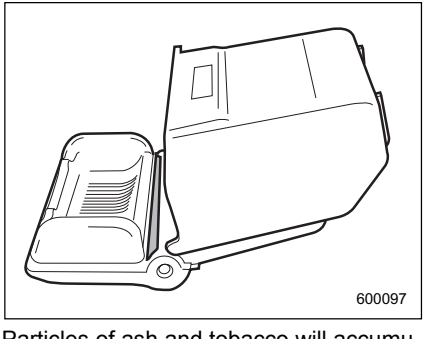

Particles of ash and tobacco will accumulate around the hinges of the ashtray's inner lid. Clean them off using a toothbrush or other narrow-ended implement.

■ Climate control panel, audio panel, instrument panel, console panel, switches, combination meter, and other plastic surfaces

Use a soft, damp cloth to clean the climate control panel, audio equipment, instrument panel, center console, combination meter panel, and switches. (Do not use organic solvents.)

NOTE

Do not use organic solvents such as paint thinners or gasoline, or strong cleaning agents that contain those solvents.

Maintenance schedule 11-3
Maintenance precautions 11-3
Before checking or servicing in the engine compartment 11-4
When you do checking or servicing in the engine compartment while the engine is running 11-4
Engine hood 11-4
Engine compartment overview 11-6
Non-turbo models 11-6
Turbo models 11-7
Engine oil 11-8
Checking the oil level 11-8
Changing the oil and oil filter 11-8
Recommended grade and viscosity 11-10
Recommended grade and viscosity under severe driving conditions 11-11
Synthetic oil 11-11
Cooling system 11-11
Cooling fan, hose and connections 11-12
Engine coolant 11-12
Air cleaner element 11-15
Replacing the air cleaner element 11-15
Spark plugs 11-17
Recommended spark plugs 11-17
Drive belts 11-17
Manual transmission oil 11-18
Checking the oil level 11-18
Recommended grade and viscosity 11-19
Automatic transmission fluid 11-19
Checking the fluid level 11-19
Recommended fluid 11-20
Front differential gear oil (AT vehicles) 11-21
Checking the oil level 11-21
Recommended grade and viscosity 11-21
Rear differential gear oil 11-22
Checking the gear oil level 11-22
Recommended grade and viscosity 11-22
Power steering fluid 11-23
Checking the fluid level 11-23
Recommended fluid 11-24
Brake fluid 11-24
Checking the fluid level 11-24
Recommended brake fluid 11-25
Clutch fluid (MT vehicles) 11-25
Checking the fluid level 11-25
Recommended clutch fluid 11-26
Brake booster 11-26
Brake pedal 11-26
Checking the brake pedal free play 11-26
Checking the brake pedal reserve distance 11-27
Clutch pedal (MT vehicles) 11-27
Checking the clutch function 11-27
Checking the clutch pedal free play 11-27
Hill holder (MT vehicles – if equipped) 11-28

Replacement of brake pad and lining 11-28
Breaking-in of new brake pads and linings 11-28
Parking brake stroke 11-29
Tires and wheels 11-29
Types of tires 11-29
Tire inspection 11-30
Tire pressures and wear 11-30
Wheel balance 11-32
Wear indicators 11-32
Tire rotation 11-32
Tire replacement 11-33
Wheel replacement 11-33
Aluminum wheels (if equipped) 11-34
Windshield washer fluid 11-34
Replacement of wiper blades 11-36
Windshield wiper blades 11-36
Rear window wiper blade 11-37
Battery 11-39
Fuses 11-40
Main fuse 11-41
Installation of accessories 11-42
Replacing bulbs 11-43
Headlights (Canada-spec. 2.5XT) 11-44
Headlights (Except Canada-spec. 2.5XT) 11-45
Rear combination lights 11-46
License plate light 11-47
Dome light and map light 11-47
High mount stop light 11-48

Maintenance schedule

The scheduled maintenance items required to be serviced at regular intervals are shown in the “Warranty and Maintenance Booklet”.

For details of your maintenance schedule, read the separate “Warranty and Maintenance Booklet”.

Maintenance precautions

When maintenance and service are required, it is recommended that all work be done by an authorized SUBARU dealer.

If you perform maintenance and service by yourself, you should familiarize yourself with the information provided in this section on general maintenance and service for your SUBARU.

Incorrect or incomplete service could cause improper or unsafe vehicle operation. Any problems caused by improper maintenance and service performed by you are not eligible for warranty coverage.

WARNING

- **Testing of an All-Wheel Drive vehicle must NEVER be performed on a single two-wheel dynamometer or similar apparatus. Attempting to do so will result in transmission damage and in uncontrolled vehicle movement and may cause an accident or injuries to persons nearby.**
- **Always select a safe area when performing maintenance on your vehicle.**
- **Always be very careful to avoid injury when working on the vehicle. Remember that some of the materials in the vehicle may be hazardous if improperly used or handled, for example, battery acid.**
- **Your vehicle should only be serviced by persons fully competent to do so. Serious personal injury may result to persons not experienced in servicing vehicles.**
- **Always use the proper tools and make certain that they are well maintained.**
- **Never get under the vehicle supported only by a jack. Always use a safety stands to support the vehicle.**
- **Never keep the engine running in a poorly ventilated area, such as a garage or other closed areas.**
- **Do not smoke or allow open flames around the fuel or battery. This will cause a fire.**
- **Because the fuel system is under pressure, replacement of the fuel filter should be performed only by your SUBARU dealer.**

– CONTINUED –

- **Wear adequate eye protection to guard against getting oil or fluids in your eyes. If something does get in your eyes, thoroughly wash them out with clean water.**
- **Do not tamper with the wiring of the SRS airbag system or seatbelt pretensioner system, or attempt to take its connectors apart, as that may activate the system or it can render it inoperative. The wiring and connectors of these systems are yellow for easy identification. NEVER use a circuit tester for these wiring.**
  If your SRS airbag or seatbelt pretensioner needs service, consult your nearest SUBARU dealer.

■ Before checking or servicing in the engine compartment

⚠ WARNING

- **Always stop the engine and set the parking brake firmly to prevent the vehicle from moving.**
- **Always let the engine cool down. Engine parts become very hot when the engine is running and remain hot for some time after the engine is stopped.**
- **Do not spill engine oil, engine coolant, brake fluid or any other fluid on hot engine components. This may cause a fire.**
- **Always remove the key from the ignition switch. When the ignition switch is in the "ON" position, the cooling fan may operate suddenly even when the engine is stopped.**

■ When you do checking or servicing in the engine compartment while the engine is running

⚠ WARNING

A running engine can be dangerous. Keep your fingers, hands, clothing, hair and tools away from the cooling fan, belts and any other moving engine parts. Removing rings, watches and ties is advisable.

Engine hood

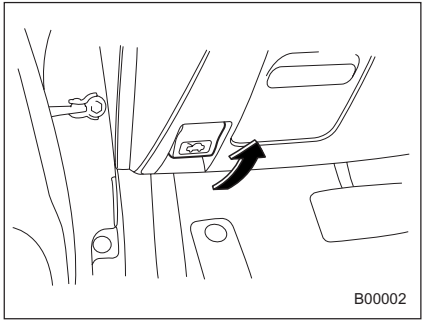

To open the hood:
1. If the wiper blades are lifted off the windshield, return them to their original positions.
2. Pull the hood release knob under the instrument panel.

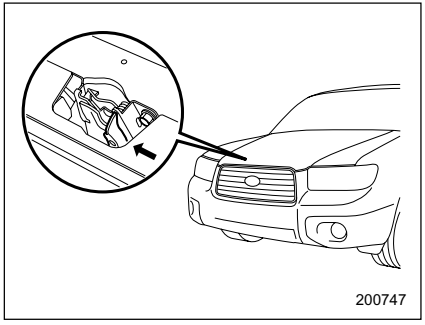

3. Release the secondary hood release located under the front grille by moving the lever toward the left.

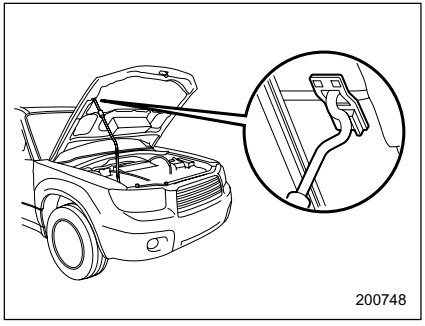

Lift up the hood, release the hood prop from its retainer and put the end of the hood prop into the slot in the hood.

To close the hood:
1. Lift the hood slightly and remove the hood prop from the slot in the hood and return the prop to its retainer.
2. Lower the hood until it approaches approximately **12 in (30 cm)** from the closed position and let it drop.

After closing the hood, be sure the hood is securely locked.

If this does not close the hood, release it from a slightly higher position. Do not push the hood forcibly to close it. It could deform the metal.

⚠ WARNING

Always check that the hood is properly locked before you start driving. If it is not, it might fly open while the vehicle is moving and block your view, which may cause an accident and serious bodily injury.

Engine compartment overview

■ Non-turbo models

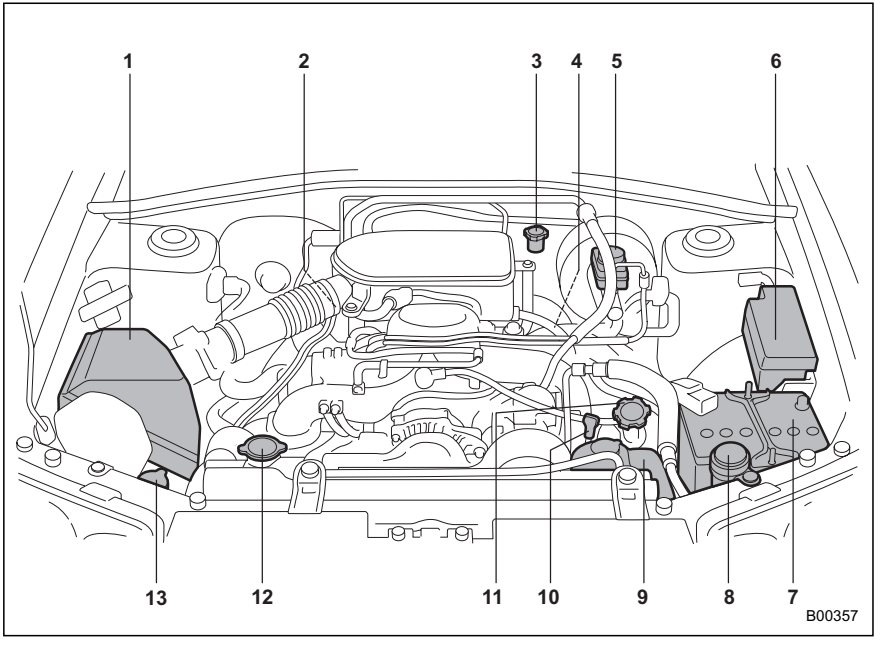

1) Air cleaner element (page 11-15)
2) Manual transmission oil level gauge (MT) (page 11-18) or Differential gear oil level gauge (AT) (page 11-21)
3) Clutch fluid reservoir (page 11-25)
4) Automatic transmission fluid level gauge (page 11-19)
5) Brake fluid reservoir (page 11-24)
6) Fuse box (page 11-40)
7) Battery (page 11-39)
8) Windshield washer tank (page 11-34)
9) Engine coolant reservoir (page 11-11)
10) Engine oil level gauge (page 11-8)
11) Engine oil filler cap (page 11-8)
12) Radiator cap (page 11-11)
13) Power steering fluid reservoir (page 11-23)

■ Turbo models

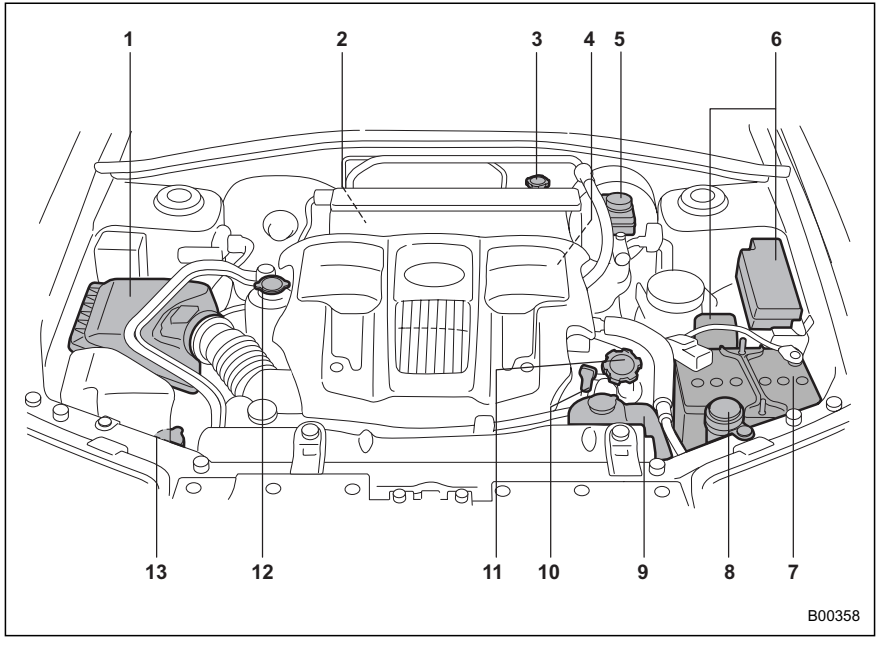

1) Air cleaner element (page 11-15)
2) Manual transmission oil level gauge (MT) (page 11-18) or Differential gear oil level gauge (AT) (page 11-21)
3) Clutch fluid reservoir (page 11-25)
4) Automatic transmission fluid level gauge (page 11-19)
5) Brake fluid reservoir (page 11-24)
6) Fuse box (page 11-40)
7) Battery (page 11-39)
8) Windshield washer tank (page 11-34)
9) Engine coolant reservoir (page 11-11)
10) Engine oil level gauge (page 11-8)
11) Engine oil filler cap (page 11-8)
12) Radiator cap (page 11-11)
13) Power steering fluid reservoir (page 11-23)

Engine oil

■ Checking the oil level

Check the engine oil level at each fuel stop.

1. Park the vehicle on a level surface and stop the engine.

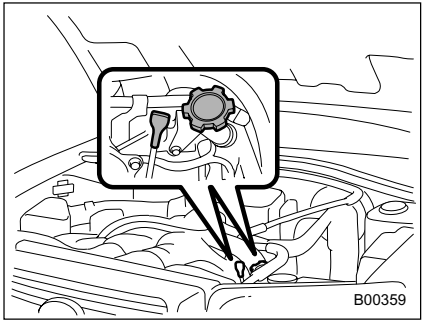

2. Pull out the dipstick, wipe it clean, and insert it again.
3. Be sure the dipstick is correctly inserted until it stops with the graphic symbol " " on its top appearing as shown in the illustration.

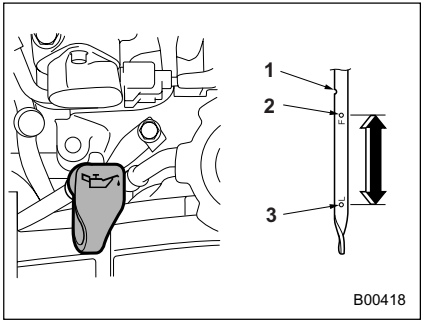

1) Notch
2) Upper level
3) Lower level

4. Pull out the dipstick again and check the oil level on it. If it is below the lower level, add oil to bring the level up to the upper level.

⚠ CAUTION

- **Use only engine oil with the recommended grade and viscosity.**
- **Be careful not to spill engine oil when adding it. If oil touches the exhaust pipe, it may cause a bad smell, smoke, and/or a fire. If engine oil gets on the exhaust pipe, be sure to wipe it off.**

If you check the oil level just after stopping the engine, wait a few minutes for the oil to drain back into the oil pan before checking the level.

Just after driving or while the engine is warm, the engine oil level reading may be in a range between the upper level and the notch mark. This is caused by thermal expansion of the engine oil.

To prevent overfilling the engine oil, do not add any additional oil above the upper level when the engine is cold.

■ Changing the oil and oil filter

Change the oil and oil filter according to the maintenance schedule in the "Warranty and Maintenance Booklet".

The engine oil and oil filter must be changed more frequently than listed in the maintenance schedule when driving on dusty roads, when short trips are frequently made, when towing a trailer, or when driving in extremely cold whether.

1. Warm up the engine by letting the engine idle for approximately 10 minutes to ease draining the engine oil.
2. Park the vehicle on a level surface and stop the engine.
3. Remove the oil filler cap.

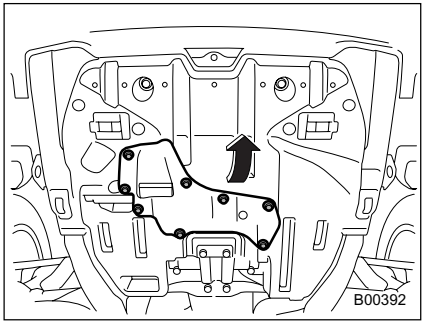

4. Open the access cover by removing the eight clips and turning the access cover counterclockwise. The drain plug will be exposed.

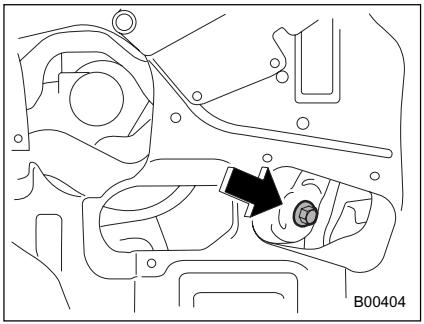

5. Drain out the engine oil by removing the drain plug while the engine is still warm. The used oil should be drained into an appropriate container and disposed of properly.

WARNING

Be careful not to burn yourself with hot engine oil.

6. Wipe the seating surface of the drain plug with a clean cloth and tighten it securely with a new sealing washer after the oil has completely drained out.

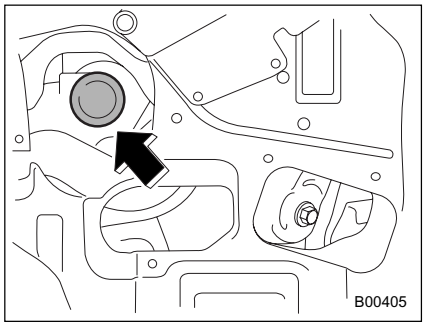

7. Remove the oil filter with an oil filter wrench.
8. Before installing a new oil filter, apply a thin coat of engine oil to the seal.
9. Clean the rubber seal seating area of the bottom of engine and install the oil filter by hand turning. Be careful not to twist or damage the seal.
10. Tighten the oil filter by the amount indicated in the following table after the seal makes contact with the bottom of engine.

Oil filter color	Part number	Amount of rotation
Black	15208AA100	1 rotation
White	15208AA09A	2/3 – 3/4 rotation

CAUTION

- **Never over tighten the oil filter because that can result in an oil leak.**
- **Thoroughly wipe off any engine oil that has spilled over the exhaust pipe and/or under-cover. If left unremoved, the oil could catch fire.**

11. Close the access cover by turning it clockwise and reinstall the eight clips in their original positions.
12. Pour engine oil through the filler neck.

Oil quantity (guideline):

4.2 US qt (4.0 liters, 3.5 Imp qt)

– CONTINUED –

The oil quantity indicated above is only a guideline. The necessary quantity of oil depends on the quantity of oil that has been drained. The quantity of drained oil differs slightly depending on the temperature of the oil and the time the oil is left flowing out. After pouring oil into the engine, therefore, you must use the dipstick to confirm that the level is correct.

13.Start the engine and make sure that no oil leaks appear around the filter's rubber seal.

14.Run the engine until it reaches the normal operating temperature. Then stop the engine and wait a few minutes to allow the oil drain back. Check the oil level again and if necessary, add more engine oil.

■ Recommended grade and viscosity

Oil grade:

ILSAC GF-4, which can be identified with the ILSAC certification mark (Starburst mark)
or API classification SM with the words "ENERGY CONSERVING"

These recommended oil grades can be identified by looking for either or both of the following marks displayed on the oil container.

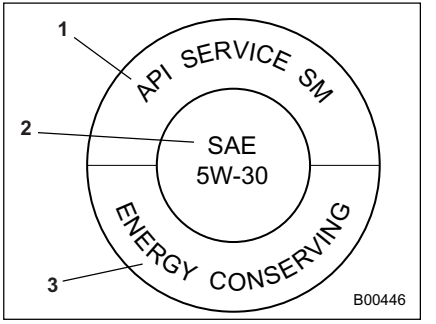

API Service label

1) Indicates the oil quality by API designations
2) Indicates the SAE oil viscosity grade
3) Indicates that the oil has fuel saving capabilities

ILSAC Certification Mark (Starburst Mark)

In choosing an oil, you want the proper quality and viscosity, as well as one that will add to fuel economy. The following table lists the recommended viscosities and applicable temperatures.

When adding oil, different brands may be used together as long as they are the same API classification and SAE viscosity as those recommended by SUBARU.

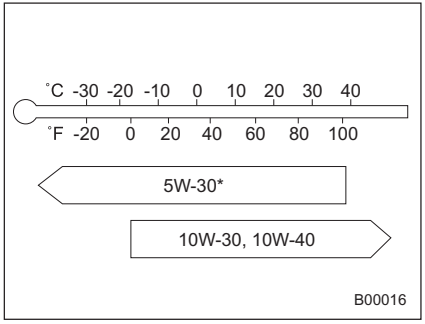

SAE viscosity number and applicable temperature
*: 5W-30 is recommended.

Engine oil viscosity (thickness) affects fuel economy. Oils of lower viscosity provide better fuel economy. However, in hot weather, oil of higher viscosity is required to properly lubricate the engine.

⚠ CAUTION

Use only engine oil with the recommended grade and viscosity.

■ Recommended grade and viscosity under severe driving conditions

If the vehicle is used in desert areas, in areas with very high temperatures, or used for heavy-duty applications such as towing a trailer, use of oil with the following grade and viscosities is recommended.

API classification SM (or SL):

SAE viscosity No.:
30, 40, 10W-50, 20W-40, 20W-50

■ Synthetic oil

You can use synthetic engine oil that meets the same requirements given for conventional engine oil. When using synthetic oil, you must use oil of the same classification, viscosity and grade shown in this owner's manual, and must follow the oil and filter changing intervals shown in the maintenance schedule.

Cooling system

⚠ WARNING

Never attempt to remove the radiator cap until the engine has been shut off and has cooled down completely. Since the coolant is under pressure, you may suffer serious burns from a spray of boiling hot coolant when the cap is removed.

⚠ CAUTION

The cooling system has been filled at the factory with a high quality, corrosion-inhibiting, year-around coolant which provides protection against freezing down to –33°F (–36°C). For adding, use genuine SUBARU coolant or an equivalent: a mixture of 50% soft water and 50% ethylene-glycol basis coolant. Use of improper coolants may result in corrosion in the cooling system. It is important to maintain protection against freezing and corrosion, even if freezing temperatures are not expected. Never mix different kinds of coolant.

– CONTINUED –

■ Cooling fan, hose and connections

Your vehicle employs an electric cooling fan which is thermostatically controlled to operate when the engine coolant reaches a specific temperature.
If the radiator cooling fan does not operate even when the engine coolant temperature gauge exceeds the normal operating range, the cooling fan circuit may be defective. Check the fuse and replace it if necessary. If the fuse is not blown, have the cooling system checked by your SUBARU dealer.

If frequent addition of coolant is necessary, there may be a leak in the engine cooling system. It is recommended that the cooling system and connections be checked for leaks, damage, or looseness.

■ Engine coolant

▼ Checking the coolant level

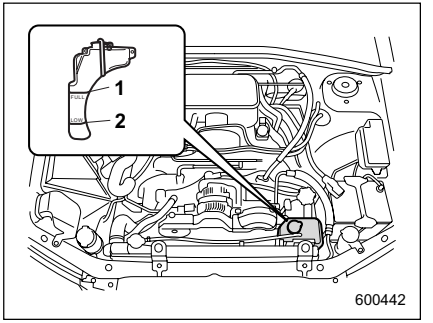

1) “FULL” level mark
2) “LOW” level mark

Check the coolant level at each fuel stop.
1. Check the coolant level on the outside of the reservoir while the engine is cool.
2. If the level is close to or lower than the “LOW” level mark, add coolant up to the “FULL” level mark. If the reserve tank is empty, remove the radiator cap and refill as required.

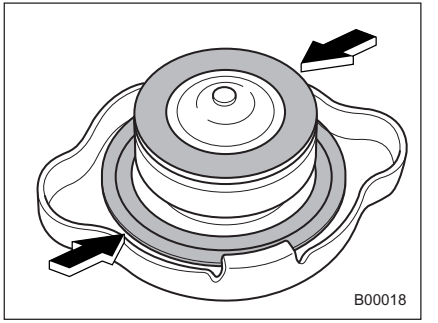

3. After refilling the reserve tank and the radiator, reinstall the caps and check that the rubber gaskets inside the radiator cap are in the proper position.

⚠ CAUTION

- **Be careful not to spill engine coolant when adding it. If coolant touches the exhaust pipe, it may cause a bad smell, smoke, and/or a fire. If engine coolant gets on the exhaust pipe, be sure to wipe it off.**
- **Do not splash the engine coolant over painted parts. The alcohol contained in the engine coolant may damage the paint surface.**

▼ Changing the coolant

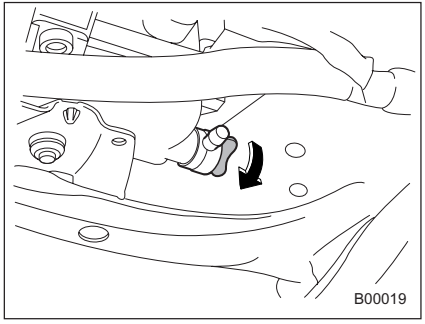

Always add genuine Subaru cooling system conditioner whenever the coolant is replaced.
Change the engine coolant and add genuine Subaru cooling system conditioner using the following procedures according to the maintenance schedule.

1. Remove the under cover.
2. Place a proper container under the drain plug and loosen the drain plug.
3. Loosen the radiator cap to drain the coolant from the radiator. Then drain the coolant from the reserve tank. Tighten the drain plug securely.

⚠ WARNING

Never attempt to remove the radiator cap until the engine has been shut off and has cooled down completely. Since the coolant is under pressure, you may suffer serious burns from a spray of boiling hot coolant when the cap is removed.

4. Install the under cover.

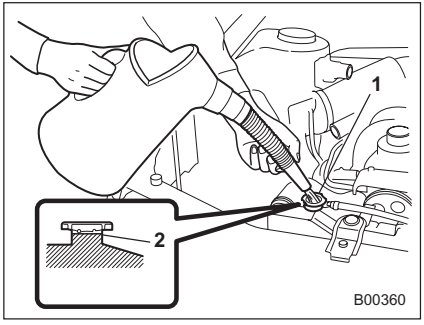

Non-turbo models
1) Filler neck
2) Fill up to this level

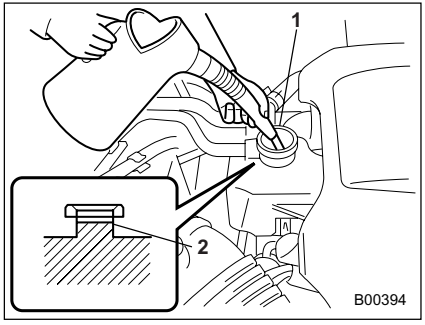

Turbo models
1) Filler neck
2) Fill up to this level

5. Slowly pour the coolant and fill up to just below the filler neck, allowing enough room to add genuine Subaru cooling system conditioner in the radiator. Add genuine Subaru cooling system conditioner until the coolant level reaches the filler neck. Do not pour the coolant too quickly, as this may lead to insufficient air bleeding and trapped air in the system.

– CONTINUED –

Guideline of coolant quantity (including coolant in reservoir tank):

Non-turbo models:
MT. 7.3 US qt (6.9 liters, 6.1 Imp qt)
AT. 7.2 US qt (6.8 liters, 6.0 Imp qt)

Turbo models:
MT. 7.8 US qt (7.4 liters, 6.5 Imp qt)
AT. 7.7 US qt (7.3 liters, 6.4 Imp qt)

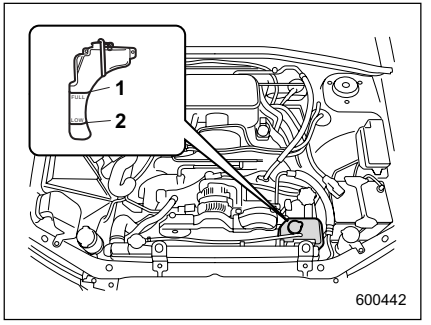

1) "FULL" level mark
2) "LOW" level mark

6. Pour the coolant and fill to the reservoir tank's "FULL" level mark.

⚠ CAUTION

- **Be careful not to spill engine coolant when adding it. If coolant touches the exhaust pipe, it may cause a bad smell, smoke, and/or a fire. If engine coolant gets on the exhaust pipe, be sure to wipe it off.**
- **Do not splash the engine coolant over painted parts. The alcohol contained in the engine coolant may damage the paint surface.**

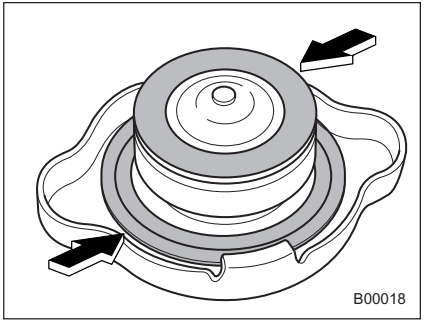

7. Put the radiator cap back on and tighten firmly. At this time, make sure that the rubber gasket in the radiator cap is correctly in place.
8. Start and run the engine for more than five minutes at 2,000 to 3,000 rpm.
9. Stop the engine and wait until the coolant cools down (122 to 140°F [50 to 60°C]). If there is any loss of coolant, add coolant to the radiator's filler neck and to the reserve tank's "FULL" level.
10. Put the radiator cap and reservoir cap back on and tighten firmly.

Air cleaner element

The air cleaner element functions as a filter screen. When the element is perforated or removed, engine wear will be excessive and engine life shortened.

The air cleaner element is a viscous type. It is unnecessary to clean or wash the element.

⚠ WARNING

Do not operate the engine with the air cleaner element removed. The air cleaner element not only filters intake air but also stops flames if the engine backfires. If the air cleaner element is not installed when the engine backfires, you could be burned.

■ Replacing the air cleaner element

Replace the air cleaner element according to the maintenance schedule in the "Warranty and Maintenance Booklet". Under extremely dusty conditions, replace it more frequently. It is recommended that you always use genuine SUBARU parts.

▼ Non-turbo models

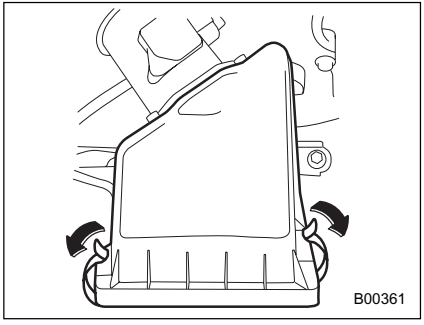

1. Unsnap the two clamps holding the air cleaner case cover.

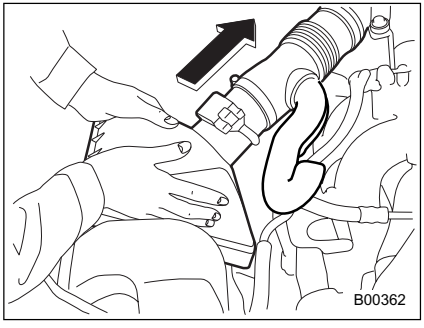

2. Push the air cleaner case cover in the direction of the arrow shown in the drawing.

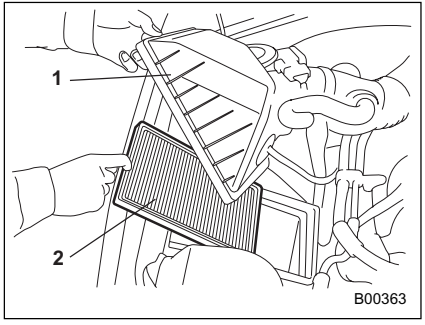

1) Air cleaner case cover
2) Air cleaner element

3. Open the air cleaner case cover and remove the air cleaner element.
4. Clean the inside of the air cleaner cover and case with a damp cloth and install a new air cleaner element.

– CONTINUED –

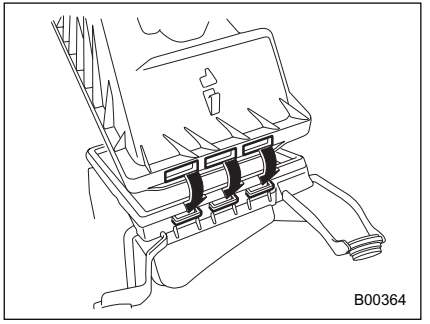

5. To install the air cleaner case cover, insert the three projections on the air cleaner case into the slits on the air cleaner case cover and then snap the two clamps on the air cleaner case cover.

▼ **Turbo models**

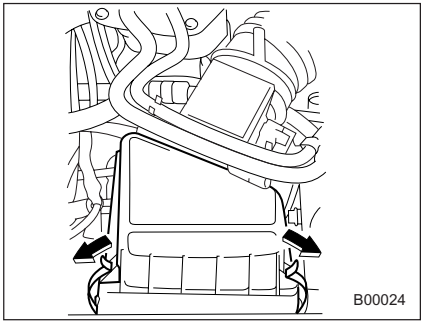

1. Unsnap the two clamps holding the air cleaner case cover.

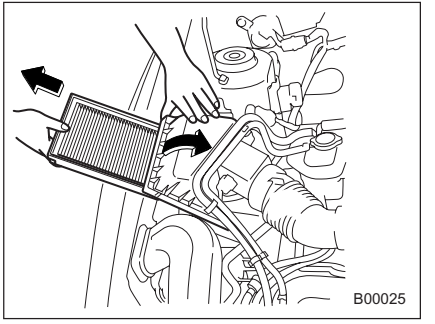

2. Open the air cleaner case cover and remove the air cleaner element.

3. Clean the inside of the air cleaner cover and case with a damp cloth and install a new air cleaner element.

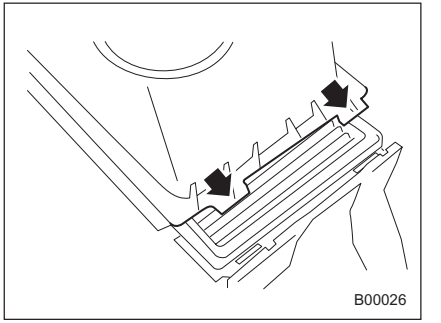

4. To install the air cleaner case cover, insert the two projections on the air cleaner case cover into the slits on the air cleaner case and then snap the two clamps on the air cleaner case cover.

Spark plugs

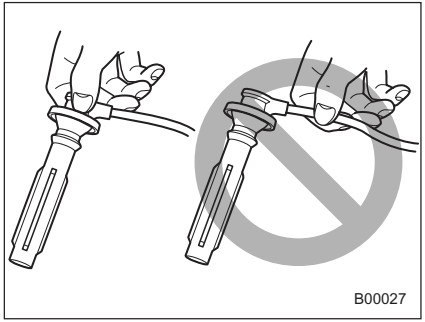

It may be difficult to replace the spark plugs. It is recommended that you have the spark plugs replaced by your SUBARU dealer.

The spark plugs should be replaced according to the maintenance schedule in the “Warranty and Maintenance Booklet”.

CAUTION

- **When disconnecting the spark plug cables, always grasp the spark plug cap, not the cables.**
- **Make sure the cables are replaced in the correct order.**

■ Recommended spark plugs

Non-turbo models:

FR5AP-11 (NGK)

Turbo models:

ILFR6B (NGK)

Drive belts

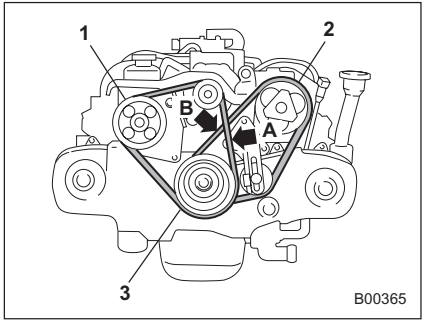

1) Power steering pump pulley
2) Air conditioner compressor pulley
3) Crank pulley

The alternator, power steering pump, and air conditioner compressor depend on drive belts. Satisfactory performance requires that belt tension be correct.

To check belt tension, place a straightedge (ruler) across two adjacent pulleys and apply a force of 22 lbs (98 N, 10 kg) midway between the pulleys by using a spring scale. Belt deflection should be the amount specified. If a belt is loose, cracked, or worn, contact your SUBARU dealer.

– CONTINUED –

in (mm)

	Deflection	
	New belt	Used belt
A	0.28 – 0.35 (7.0 – 9.0)	0.35 – 0.43 (9.0 – 11.0)
B	0.30 – 0.33 (7.5 – 8.5)	0.35 – 0.40 (9.0 – 10.0)

Manual transmission oil

■ Checking the oil level

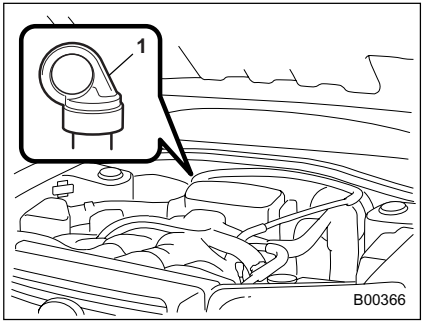

Non-turbo models:
1) Yellow handle

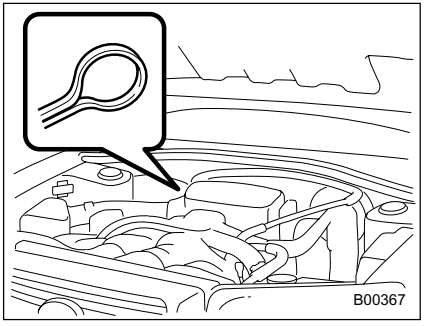

Turbo models

Check the oil level monthly.
1. Park the vehicle on a level surface and stop the engine.
2. Pull out the dipstick, wipe it clean, and insert it again.

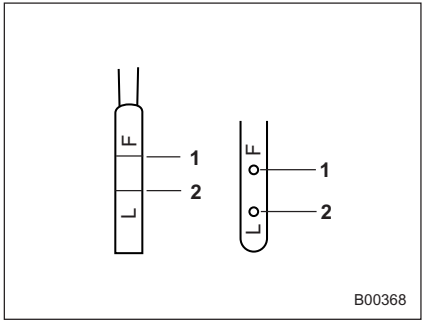

1) Upper level
2) Lower level

3. Pull out the dipstick again and check the oil level on it. If it is below the lower level, add oil through the dipstick hole to bring the level up to the upper level.

CAUTION

Be careful not to spill manual transmission oil when adding it. If oil touches the exhaust pipe, it may cause a bad smell, smoke, and/or a fire. If oil gets on the exhaust pipe, be sure to wipe it off.

■ Recommended grade and viscosity

Each oil manufacturer has its own base oils and additives. Never use different brands together.

Oil grade:

API classification GL-5

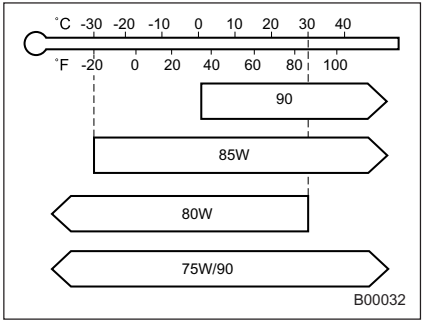

SAE viscosity No. and applicable temperature

Automatic transmission fluid

■ Checking the fluid level

The automatic transmission fluid expands largely as its temperature rises; the fluid level differs according to fluid temperature. Therefore, there are two different scales for checking the level of hot fluid and cold fluid on the dipstick.

Though the fluid level can be checked without warming up the fluid on the “COLD” range, we recommend checking the fluid level when the fluid is at operating temperature.

▼ Checking the fluid level when the fluid is hot

Check the fluid level monthly.

1. Drive the vehicle several miles to raise the temperature of the transmission fluid up to normal operating temperature; 154 to 176°F (70 to 80°C) is normal.
2. Park the vehicle on a level surface and set the parking brake.
3. First shift the selector lever in each position. Then shift it in the “P” position, and run the engine at idling speed.

– CONTINUED –

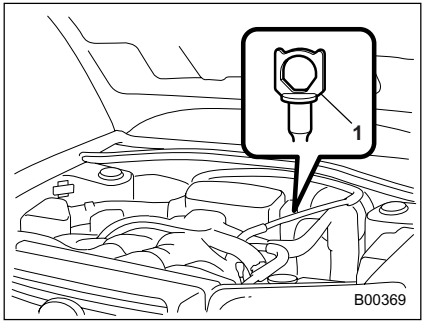

1) Yellow handle

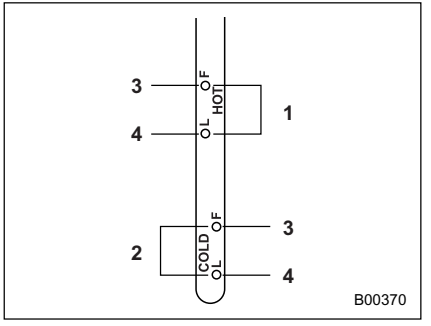

1) HOT range
2) COLD range
3) Upper level
4) Lower level

4. Pull out the dipstick and check the fluid level on the gauge. If it is below the lower level on the “HOT” range, add the recommended automatic transmission fluid up to the upper level.

▼ Checking the fluid level when the fluid is cold

When the fluid level has to be checked without time to warm up the automatic transmission, check to see that the fluid level is between the lower level and upper level on the “COLD” range. If it is below that range, add fluid up to the upper level. Be careful not to overfill.

⚠ CAUTION

Be careful not to spill automatic transmission fluid when adding it. If automatic transmission fluid touches the exhaust pipe, it may cause a bad smell, smoke, and/or a fire. If automatic transmission fluid gets on the exhaust pipe, be sure to wipe it off.

■ Recommended fluid

Use one of the following types of automatic transmission fluid.

Genuine Subaru Automatic Transmission Fluid Type-HP
IDEMITSU ATF HP
Castrol Transmax J
Pennzoil ATF-J*
*** Available only in the USA (except Alaska and Hawaii)**

NOTE

Using any non-specified type of automatic transmission fluid could result in damage inside the transmission. When replacing the automatic transmission fluid, be sure to use a fluid of the types specified above.

Front differential gear oil (AT vehicles)

■ Checking the oil level

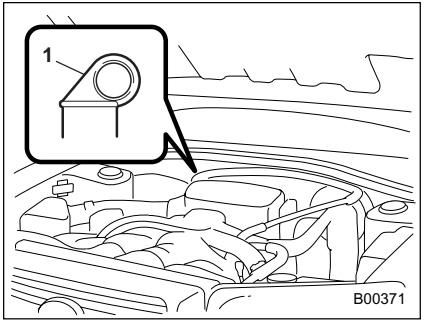

1) Yellow handle

Check the differential oil level monthly.
1. Park the vehicle on a level surface and stop the engine.
2. Pull out the dipstick, wipe it clean, and insert it again.

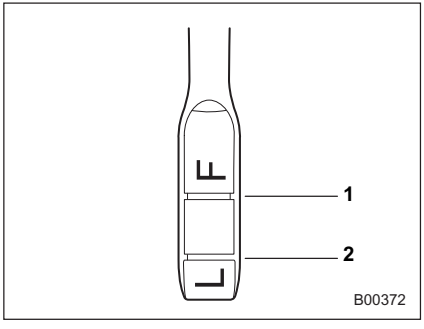

1) Upper level
2) Lower level

3. Pull out the dipstick again and check the oil level on it. If it is below the lower level, add oil to bring the level up to the upper level.

⚠ CAUTION

Be careful not to spill front differential gear oil when adding it. If oil touches the exhaust pipe, it may cause a bad smell, smoke, and/or a fire. If oil gets on the exhaust pipe, be sure to wipe it off.

■ Recommended grade and viscosity

Each oil manufacturer has its own base oils and additives. Never use different brands together.

Oil grade:

API classification GL-5

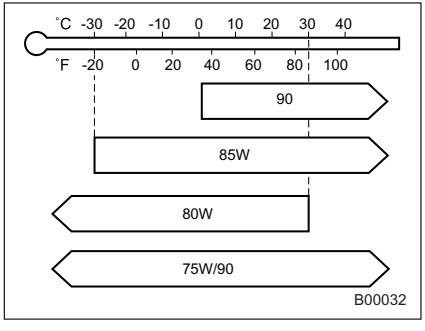

SAE viscosity No. and applicable temperature

Rear differential gear oil

■ Checking the gear oil level

Your vehicle may be equipped with a rear differential protector. The differential protector provides protection to the rear differential assembly during off-road use. Removal of the rear differential protector is not required when checking the oil level.

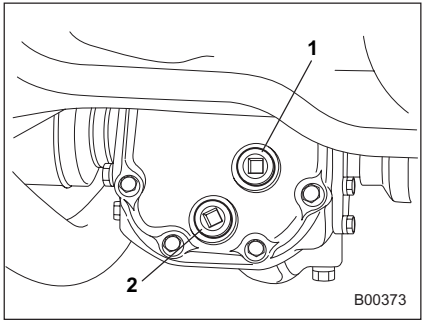

1) Filler plug
2) Drain plug

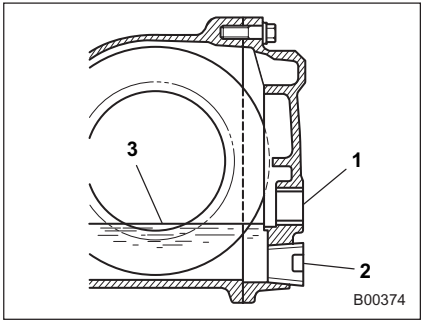

1) Filler hole
2) Drain hole
3) Oil level

Remove the plug from the filler hole and check the oil level. The oil level should be kept even with the bottom of the filler hole. If the oil level is below the bottom edge of the hole, add oil through the filler hole to raise the level.

⚠ CAUTION

- **Be careful not to spill rear differential gear oil when adding it. If rear differential gear oil touches the exhaust pipe, it may cause a bad smell, smoke, and/or a fire. If rear differential gear oil gets on the exhaust pipe, be sure to wipe it off.**
- **If the vehicle requires frequent refilling, there may be an oil leak. If you suspect a problem, have the vehicle checked at your SUBARU dealer.**

■ Recommended grade and viscosity

Each oil manufacturer has its own base oils and additives. Never use different brands together.

Oil grade:

API classification GL-5

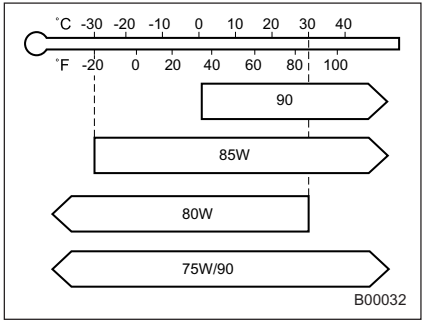

SAE viscosity No. and applicable temperature

Power steering fluid

■ Checking the fluid level

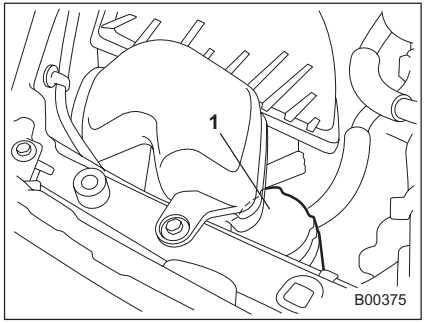

1) Reservoir tank

The power steering fluid expands greatly as its temperature rises; the fluid level differs according to fluid temperature. Therefore, the reservoir tank has two different checking ranges for hot and cold fluids.

Check the power steering fluid level monthly.

1. Park the vehicle on a level surface, and stop the engine.

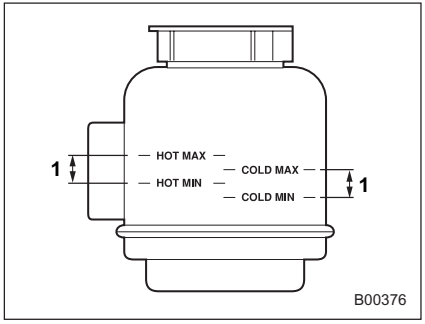

1) Specified range

2. Check the fluid level of the reservoir tank.
When the fluid is hot after the vehicle has been run: Check that the oil level is between “HOT MIN” and “HOT MAX” on the surface of the reservoir tank.
When the fluid is cool before the vehicle is run: Check that the oil level is between “COLD MIN” and “COLD MAX” on the surface of the reservoir tank.
3. If the fluid level is lower than the applicable “MIN” line, add the recommended fluid as necessary to bring the level between the “MIN” and “MAX” line.

If the fluid level is extreme low, it may indicate possible leakage. Consult your SUBARU dealer for an inspection.

– CONTINUED –

WARNING

Be careful not to burn yourself because the fluid may be hot.

CAUTION

- **When power steering fluid is being added, use only clean fluid, and be careful not to allow any dirt into the tank. And never use different brands together.**
- **Avoid spilling fluid when adding it in the tank.**
- **Be careful not to spill power steering fluid when adding it. If power steering fluid touches the exhaust pipe, it may cause a bad smell, smoke, and/or a fire. If power steering fluid gets on the exhaust pipe, be sure to wipe it off.**

■ Recommended fluid

"Dexron III" Type Automatic Transmission Fluid

Brake fluid

■ Checking the fluid level

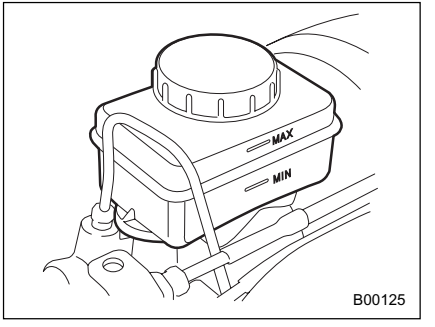

Check the fluid level monthly.
Check the fluid level on the outside of the reservoir. If the level is below "MIN", add the recommended brake fluid to "MAX".
Use only brake fluid from a sealed container.

WARNING

- **Never let brake fluid contact your eyes because brake fluid can be harmful to your eyes. If brake fluid gets in your eyes, immediately flush them thoroughly with clean water. For safety, when performing this work, wearing eye protection is advisable.**
- **Brake fluid absorbs moisture from the air. Any absorbed moisture can cause a dangerous loss of braking performance.**
- **If the vehicle requires frequent refilling, there may be a leak. If you suspect a problem, have the vehicle checked at your SUBARU dealer.**

CAUTION

- **Never use different brands of brake fluid together. Also, avoid mixing DOT 3 and DOT 4 brake fluids even if they are of the same brand.**
- **When adding brake fluid, be careful not to allow any dirt into the reservoir.**

- **Never splash the brake fluid over painted surfaces or rubber parts. Alcohol contained in the brake fluid may damage them.**
- **Be careful not to spill brake fluid when adding it. If brake fluid touches the exhaust pipe, it may cause a bad smell, smoke, and/or a fire. If brake fluid gets on the exhaust pipe, be sure to wipe it off.**

■ Recommended brake fluid

FMVSS No. 116, fresh DOT 3 or DOT 4 brake fluid

Clutch fluid (MT vehicles)

■ Checking the fluid level

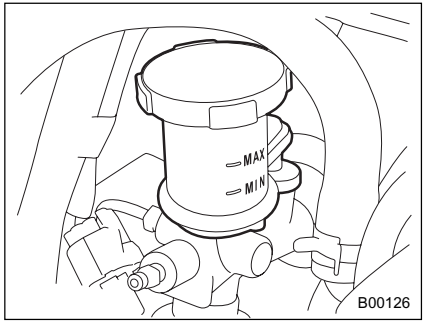

Check the fluid level on the outside of the reservoir. If the level is below “MIN” level mark, add the recommended clutch fluid to “MAX” level mark.
Use only clutch fluid from a sealed container.

⚠ WARNING

Never let clutch fluid contact your eyes because clutch fluid can be harmful to your eyes. If clutch fluid gets in your eyes, immediately flush them thoroughly with clean water. For safety, when performing this work, wearing eye protection is advisable.

⚠ CAUTION

- **Clutch fluid absorbs moisture from the air. Any absorbed moisture can cause improper clutch operation.**
- **If the vehicle requires frequent refilling, there may be a leak. If you suspect a problem, have the vehicle checked at your SUBARU dealer.**
- **Never use different brands of clutch fluid together.**
- **When clutch fluid is added, be careful not to allow any dirt into the tank.**

– CONTINUED –

- **Never splash the clutch fluid over painted surfaces or rubber parts. Alcohol contained in the clutch fluid may damage them.**
- **Be careful not to spill clutch fluid when adding it. If clutch fluid touches the exhaust pipe, it may cause a bad smell, smoke, and/or a fire. If clutch fluid gets on the exhaust pipe, be sure to wipe it off.**

■ Recommended clutch fluid

FMVSS No. 116, fresh DOT 3 or DOT 4 brake fluid

⚠ CAUTION

Avoid mixing DOT 3 and DOT 4 brake fluids even if they are of the same brand.

Brake booster

If the brake booster does not operate as described in the following, have it checked by your SUBARU dealer.

1. With the engine off, depress the brake pedal several times, applying the same pedal force each time. The distance the pedal travels should not vary.
2. With the brake pedal depressed, start the engine. The pedal should move slightly down to the floor.
3. With the brake pedal depressed, stop the engine and keep the pedal depressed for 30 seconds. The pedal height should not change.
4. Start the engine again and run for approximately one minute then turn it off. Depress the brake pedal several times to check the brake booster. The brake booster operates properly if the pedal stroke decreases with each depression.

Brake pedal

Check the brake pedal free play and reserve distance according to the maintenance schedule in the “Warranty and Maintenance Booklet”.

■ Checking the brake pedal free play

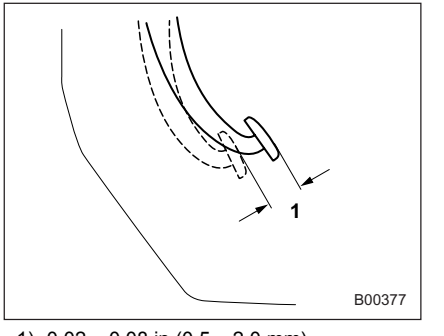

1) 0.02 – 0.08 in (0.5 – 2.0 mm)

Stop the engine and firmly depress the brake pedal several times. Lightly press the brake pedal down with one finger to check the free play with a force of less than 2 lbs (10 N, 1 kg).
If the free play is not within proper specification, contact your SUBARU dealer.

■ Checking the brake pedal reserve distance

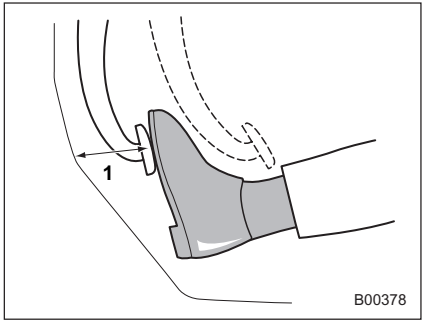

1) More than 2.56 in (65 mm)

Depress the pedal with a force of approximately 66 lbs (294 N, 30 kg) and measure the distance between the upper surface of the pedal pad and the floor.
When the measurement is smaller than the specification, or when the pedal does not operate smoothly, contact with your SUBARU dealer.

Clutch pedal (MT vehicles)

Check the clutch pedal free play and reserve distance according to the maintenance schedule in the “Warranty and Maintenance Booklet”.

■ Checking the clutch function

Check the clutch engagement and disengagement.
1. With the engine idling, check that there are no abnormal noises when the clutch pedal is depressed, and that shifting into 1st or reverse feels smooth.
2. Start the vehicle by releasing the pedal slowly to check that the engine and transmission smoothly couple without any sign of slippage.

■ Checking the clutch pedal free play

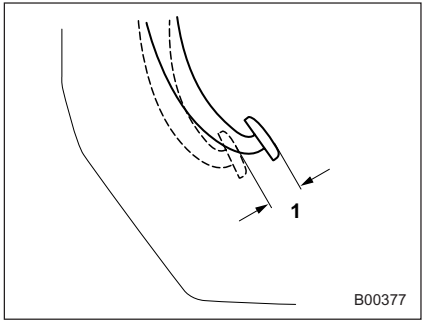

1) Non-turbo models: 0.39 – 0.79 in (10 – 20 mm)
Turbo models: 0.12 – 0.51 in (3 – 13 mm)

Lightly press the clutch pedal down with your finger until you feel resistance, and check the free play.
If the free play is not within proper specification, contact your SUBARU dealer.

Hill holder (MT vehicles – if equipped)

Ensure that the hill holder operates properly under the following circumstances:
1. Stop the vehicle on an uphill grade by depressing the brake pedal and clutch pedal, with the engine running.
2. Make sure that the vehicle does not move backward even after the brake pedal is released.
3. Then make sure the vehicle starts climbing the grade by following the normal starting procedures.

If the hill holder does not operate as described above, contact with your SUBARU dealer.

Replacement of brake pad and lining

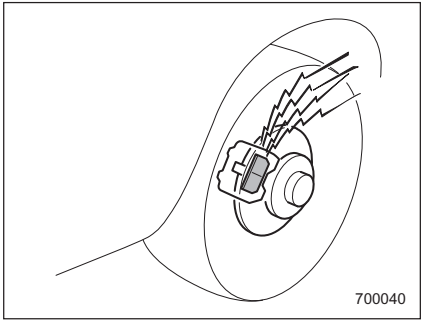

The right front disc brake and the right rear disc brake have audible wear indicators on the brake pads. If the brake pads wear close to their service limit, the wear indicator makes a very audible scraping noise when the brake pedal is applied.

If you hear this scraping noise each time you apply the brake pedal, have the brake pads serviced by your SUBARU dealer as soon as possible.

⚠ CAUTION

If you continue to drive despite the scraping noise from the audible brake pad wear indicator, it will result in the need for costly brake rotor repair or replacement.

■ Breaking-in of new brake pads and linings

When replacing the brake pad or lining, use only genuine SUBARU parts. After replacement, the new parts must be broken in as follows:

▼ Brake pad and lining

While maintaining a speed of 30 to 40 mph (50 to 65 km/h), step on the brake pedal lightly. Repeat this five or more times.

▼ Parking brake lining

1. Drive the vehicle at a speed of approximately 22 mph (35 km/h).
2. With the parking brake release button pushed in, pull the parking brake lever SLOWLY and GENTLY. (Pulling with a force of approximately 33 lbs [147 N, 15 kg].)
3. Drive the vehicle for approximately 220 yards (200 meters) in this condition.
4. Wait 5 to 10 minutes for the parking

brake to cool down. Repeat this procedure.
5. Check the parking brake stroke. If the parking brake stroke is out of the specified range, adjust it by turning the adjusting nut located on the parking brake lever.

Parking brake stroke:
7 – 8 notches / 44 lbs (196 N, 20 kg)

WARNING

A safe location and situation should be selected for break-in driving.

CAUTION

Pulling the parking brake lever too forcefully may cause the rear wheels to lock. To avoid this, be certain to pull the lever up slowly and gently.

Parking brake stroke

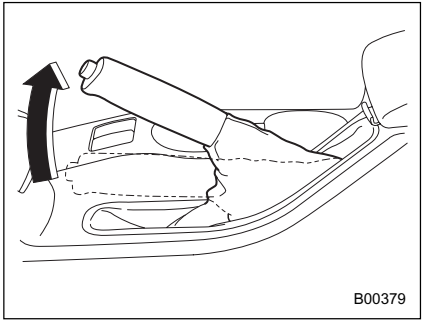

Check the parking brake stroke according to the maintenance schedule in the “Warranty and Maintenance Booklet”. When the parking brake is properly adjusted, braking power is fully applied by pulling the lever up seven to eight notches gently but firmly (approximately 44 lbs, 196 N, 20 kg). If the parking brake lever stroke is not within the specified range, have the brake system checked and adjusted at your SUBARU dealer.

Tires and wheels

■ Types of tires

You should be familiar with type of tires present on your vehicle.

▼ All season tires

The factory-installed tires on your new vehicle are all season tires.
All season tires are designed to provide an adequate measure of traction, handling and braking performance in year-round driving including snowy and icy road conditions. However all season tires do not offer as much traction performance as winter (snow) tires in heavy or loose snow or on icy roads.
All season tires are identified by “ALL SEASON” and/or “M+S” (Mud & Snow) on the tire sidewall.

▼ Summer tires

Summer tires are high-speed capability tires best suited for highway driving under dry conditions.
Summer tires are inadequate for driving on slippery roads such as on snow-covered or icy roads.
If you drive your vehicle on snow-covered or icy roads, we strongly recommend the use of winter (snow) tires.
When installing winter tires, be sure to re-

– CONTINUED –

place all four tires.

▼ **Winter (snow) tires**

Winter tires are best suited for driving on snow-covered and icy roads. However winter tires do not perform as well as summer tires and all season tires on roads other than snow-covered and icy roads.

■ Tire inspection

Check on a daily basis that the tires are free from serious damage, nails, and stones. At the same time, check the tires for abnormal wear.
Contact your SUBARU dealer immediately if you find any problem.

NOTE

• When the wheels and tires strike curbs or are subjected to harsh treatment as when the vehicle is driven on a rough surface, they can suffer damage that cannot be seen with the naked eye. This type of damage does not become evident until time has passed. Try not to drive over curbs, potholes or on other rough surfaces. If doing so is unavoidable, keep the vehicle's speed down to a walking pace or less, and approach the curbs as squarely as possible. Also, make sure the tires are not pressed against the curb when you park the vehicle.
• If you feel unusual vibration while driving or find it difficult to steer the vehicle in a straight line, one of the tires and/or wheels may be damaged. Drive slowly to the nearest authorized SUBARU dealer and have the vehicle inspected.

■ Tire pressures and wear

Maintaining the correct tire pressures helps to maximize the tires' service lives and is essential for good running performance. Check and, if necessary, adjust the pressure of each tire (including the spare) at least once a month (for example, during a fuel stop) and before any long journey.

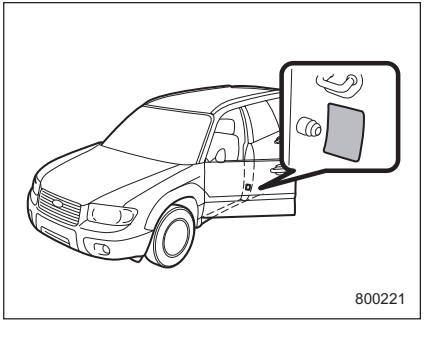

Check the tire pressures when the tires are cold. Use a pressure gauge to adjust the tire pressures to the values shown on the tire placard. The tire placard is located on the door pillar on the driver's side.

Driving even a short distance warms up the tires and increases the tire pressures. Also, the tire pressures are affected by the outside temperature. It is best to check tire pressure outdoors before driving the vehicle.

When a tire becomes warm, the air inside it expands, causing the tire pressure to increase. Be careful not to mistakenly release air from a warm tire to reduce its pressure.

NOTE

• The air pressure in a tire increases by approximately 4.3 psi (30 kPa, 0.3 kgf/cm^2) when the tire becomes warm.
• The tires are considered cold when the vehicle has been parked for at least three hours or has been driven less than one mile (1.6 km).

⚠ WARNING

Do not let air out of warm tires to adjust pressure. Doing so will result in low tire pressure.

Incorrect tire pressures detract from controllability and ride comfort, and they cause the tires to wear abnormally.

- **Correct tire pressure** (tread worn evenly)

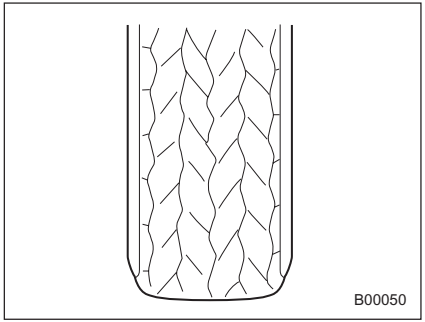

Roadholding is good, and steering is responsive. Rolling resistance is low, so fuel consumption is also lower.

- **Abnormally low tire pressure** (tread worn at shoulders)

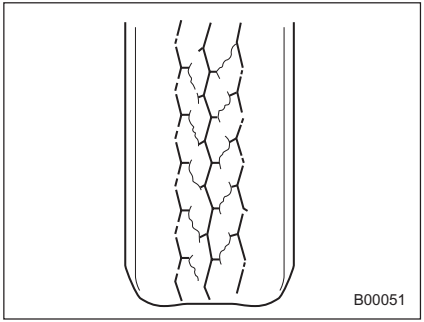

Rolling resistance is high, so fuel consumption is also higher.

- **Abnormally high tire pressure** (tread worn in center)

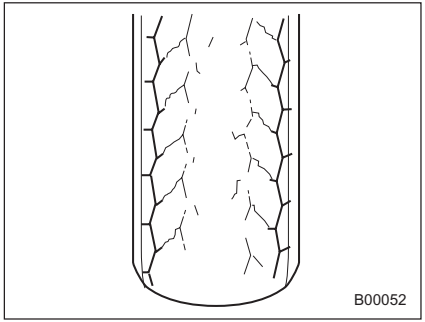

Ride comfort is poor. Also, the tire magnifies the effects of road-surface bumps and dips, possibly resulting in vehicle damage.

If the tire placard shows tire pressures for the vehicle when fully loaded and for the vehicle when towing a trailer, adjust the tire pressures to the values that match current loading conditions.

– CONTINUED –

⚠ WARNING

Driving at high speeds with excessively low tire pressures can cause the tires to deform severely and to rapidly become hot. A sharp increase in temperature could cause tread separation, and destruction of the tires. The resulting loss of vehicle control could lead to an accident.

■ Wheel balance

Each wheel was correctly balanced when your vehicle was new, but the wheels will become unbalanced as the tires become worn during use. Wheel imbalance causes the steering wheel to vibrate slightly at certain vehicle speeds and detracts from the vehicle's straight-line stability. It can also cause steering and suspension system problems and abnormal tire wear. If you suspect that the wheels are not correctly balanced, have them checked and adjusted by your SUBARU dealer. Also have them adjusted after tire repairs and after tire rotation.

NOTE

Loss of correct wheel alignment* causes the tires to wear on one side and reduces the vehicle's running stability. Contact your SUBARU dealer if you notice abnormal tire wear.

*: The suspension system is designed to hold each wheel at a certain alignment (relative to the other wheels and to the road) for optimum straight-line stability and cornering performance.

■ Wear indicators

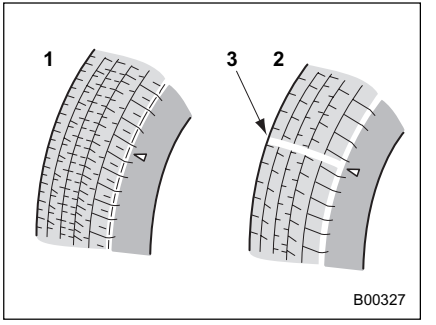

1) New tread
2) Worn tread
3) Tread wear indicator

Each tire incorporates a tread wear indicator, which becomes visible when the depth of the tread grooves decreases to 0.063 in (1.6 mm). A tire must be replaced when the tread wear indicator appears as a solid band across the tread.

⚠ WARNING

When a tire's tread wear indicator becomes visible, the tire is worn beyond the acceptable limit and must be replaced immediately. With a tire in this condition, driving at high speeds in wet weather can cause the vehicle to hydroplane. The resulting loss of vehicle control can lead to an accident.

NOTE

For safety, inspect tire tread regularly and replace the tires before their tread wear indicators become visible.

■ Tire rotation

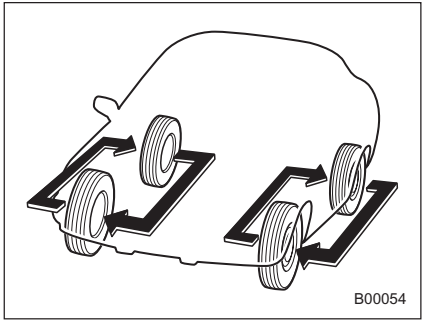

Tire wear varies from wheel to wheel. To maximize the life of each tire and ensure that the tires wear uniformly, it is best to rotate the tires every 7,500 miles (12,500 km). Rotating the tires involves switching the front and rear tires on the right-hand side of the vehicle and similarly switching the front and rear tires on the left-hand side of the vehicle. (Each tire must be kept on its original side of the vehicle.)
Replace any damaged or unevenly worn tire at the time of rotation. After tire rotation, adjust the tire pressures and make sure the wheel nuts are correctly tightened.

After driving approximately 600 miles (1,000 km), check the wheel nuts again and retighten any nut that has become loose.

■ Tire replacement

The wheels and tires are important and integral parts of your vehicle's design; they cannot be changed arbitrarily. The tires fitted as standard equipment are optimally matched to the characteristics of the vehicle and were selected to give the best possible combination of running performance, ride comfort, and service life. It is essential for every tire to have a size and construction matching those shown on the tire placard and to have a speed symbol and load index matching those shown on the tire placard.

Using tires of a non-specified size detracts from controllability, ride comfort, braking performance, speedometer accuracy and odometer accuracy. It also creates incorrect body-to-tire clearances and inappropriately changes the vehicle's ground clearance.

All four tires must be the same in terms of manufacturer, brand (tread pattern), construction, and size. You are advised to replace the tires with new ones that are identical to those fitted as standard equipment.

For safe vehicle operation, SUBARU recommends replacing all four tires at the same time.

⚠ WARNING

- **All four tires must be the same in terms of manufacturer, brand (tread pattern), construction, degree of wear, speed symbol, load index and size. Mixing tires of different types, sizes or degrees of wear can result in damage to vehicle's power train. Use of different types or sizes of tires can also dangerously reduce controllability and braking performance and can lead to an accident.**
- **Use only radial tires. Do not use radial tires together with belted bias tires and/or bias-ply tires. Doing so can dangerously reduce controllability, resulting in an accident.**

■ Wheel replacement

When replacing wheels due, for example, to damage, make sure the replacement wheels match the specifications of the wheels that are fitted as standard equipment. Replacement wheels are available from SUBARU dealers.

– CONTINUED –

⚠ WARNING

Use only those wheels that are specified for your vehicle. Wheels not meeting specifications could interfere with brake caliper operation and may cause the tires to rub against the wheel well housing during turns. The resulting loss of vehicle control could lead to an accident.

Aluminum wheels (if equipped)

Aluminum wheels can be scratched and damaged easily. Handle them carefully to maintain their appearance, performance, and safety.

- When any of the wheels is removed and replaced for tire rotation or to change a flat, always check the tightness of the wheel nuts after driving approximately 600 miles (1,000 km). If any nut is loose, tighten it to the specified torque.
- Never apply oil to the threaded parts, wheel nuts, or tapered surface of the wheel.
- Never let the wheel rub against sharp protrusions or curbs.
- Be sure to fit tire chains on uniformly and completely around the tire, otherwise the chains may scratch the wheel.
- When wheel nuts, balance weights, or the center cap is replaced, be sure to replace them with genuine SUBARU parts designed for aluminum wheels.

Windshield washer fluid

⚠ CAUTION

Never use engine coolant as washer fluid because it could cause paint damage.

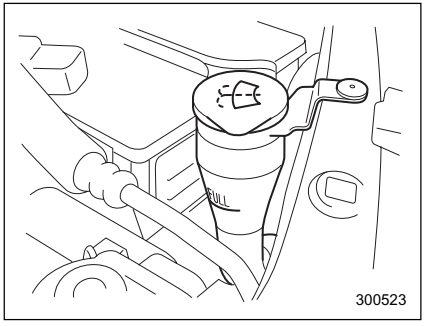

If you spray washer fluid on the windshield but the supply of washer fluid appears to diminish, check the level of washer fluid in the tank.

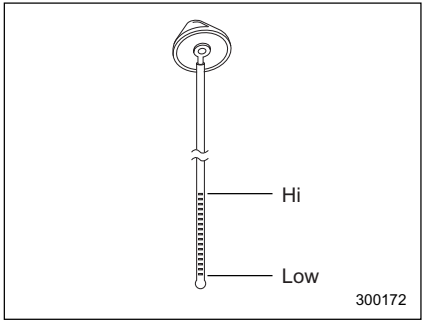

Washer fluid level gauge

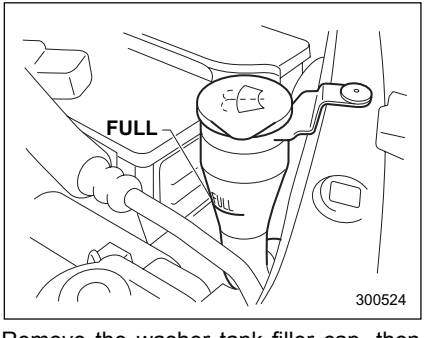

Remove the washer tank filler cap, then check the fluid level indicated by the level gauge (attached to the inside of the cap). If the level is near the “Low” mark, add fluid until it reaches the “Hi” level on the level gauge or the “Full” mark on the tank.

Use windshield washer fluid. If windshield washer fluid is unavailable use clean water.

In areas where water freezes in winter, use an anti-freeze type windshield washer fluid. SUBARU Windshield Washer Fluid contains 58.5% methyl alcohol and 41.5% surfactant, by volume. Its freezing temperature varies according to how much it is diluted, as indicated in the following table.

Washer Fluid Concentration	Freezing Temperature
30%	**10.4°F (–12°C)**
50%	**–4°F (–20°C)**
100%	**–49°F (–45°C)**

⚠ CAUTION

Never use engine coolant as washer fluid because it could cause paint damage.

In order to prevent freezing of washer fluid, check the freezing temperatures in the table above when adjusting the fluid concentration to the outside temperature.

If you fill the reservoir tank with a fluid with a different concentration from the one used previously, purge the old fluid from the piping between the reservoir tank and washer nozzles by operating the washer for a certain period of time. Otherwise, if the concentration of the fluid remaining in the piping is too low for the outside temperature, it may freeze and block the nozzles.

⚠ CAUTION

Adjust the washer fluid concentration appropriately for the outside temperature. If the concentration is inappropriate, sprayed washer fluid may freeze on the windshield and obstruct your view, and the fluid may freeze in the reservoir tank.

Replacement of wiper blades

Grease, wax, insects, or other material on the windshield or the wiper blade results in jerky wiper operation and streaking on the glass. If you cannot remove the streaks after operating the windshield washer or if the wiper operation is jerky, clean the outer surface of the windshield (or rear window) and the wiper blades using a sponge or soft cloth with a neutral detergent or mild-abrasive cleaner. After cleaning, rinse the windshield and wiper blades with clean water. The windshield is clean if beads do not form when you rinse the windshield with water.

⚠ CAUTION

Do not clean the wiper blades with gasoline or a solvent, such as paint thinner or benzene. This will cause deterioration of the wiper blades.

If you cannot eliminate the streaking even after following this method, replace the wiper blades using the following procedures:

■ Windshield wiper blades

1. Raise the wiper arm off the windshield.

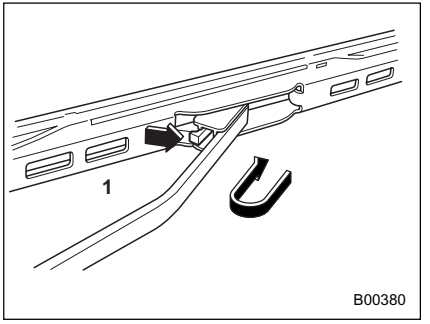

1) Stopper

2. Remove the wiper blade assembly by holding its pivot area and pushing it in the direction shown by the arrow while depressing the wiper blade stopper.

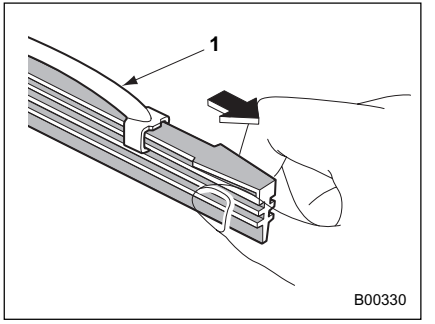

1) Metal support

3. Grasp the locked end of the blade rubber assembly and pull it firmly until the stoppers on the rubber are free of the metal support.

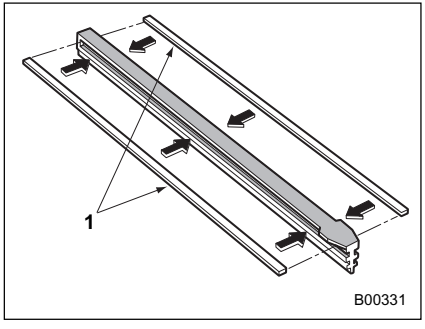

1) Metal spines

4. If the new blade rubber is not provided with two metal spines, remove the metal spines from the old blade rubber and install them in the new blade rubber.

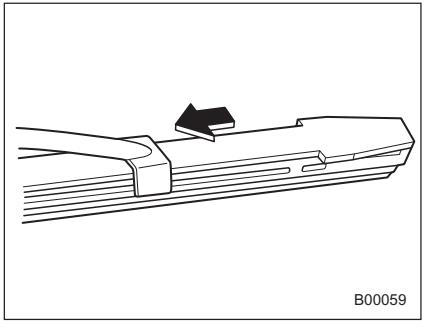

5. Align the claws of the metal support with the grooves in the rubber and slide the blade rubber assembly into the metal support until it locks.

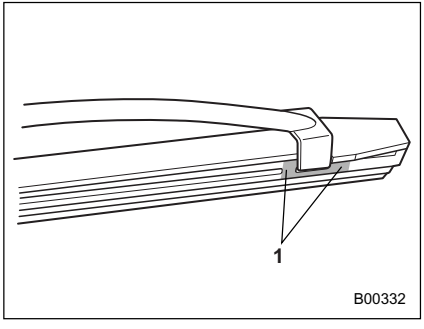

1) Stopper

Be sure to position the claws at the end of the metal support between the stoppers on the rubber as shown. If the rubber is not retained properly, the wiper blade may scratch the windshield.

6. Install the wiper blade assembly to the wiper arm. Make sure that it locks in place.
7. Lower the wiper arm.

■ Rear window wiper blade

1. Raise the wiper arm off the rear window.

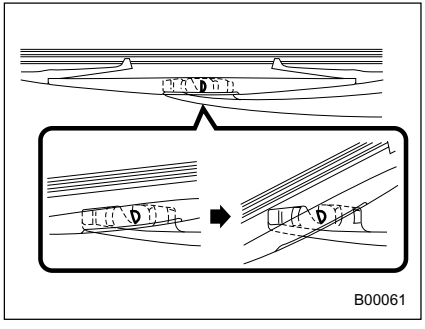

2. Turn the wiper blade assembly counterclockwise.

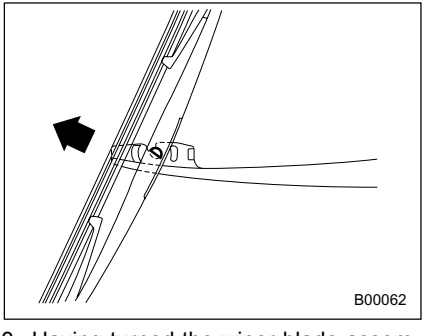

3. Having turned the wiper blade assembly to the angle shown in the illustration, pull it in the direction of the arrow to remove it from the wiper arm.

– CONTINUED –

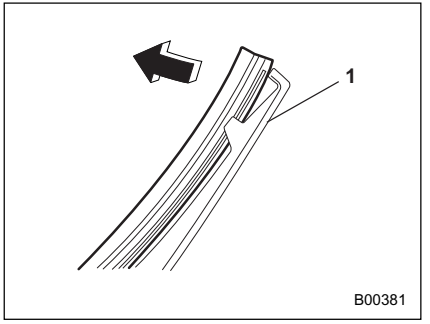

1) Plastic support

4. Pull out the end of the blade rubber assembly to unlock it from the plastic support.

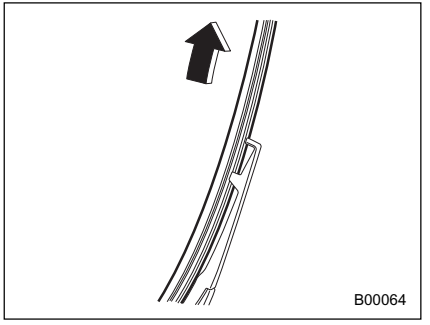

5. Pull the blade rubber assembly out of the plastic support.

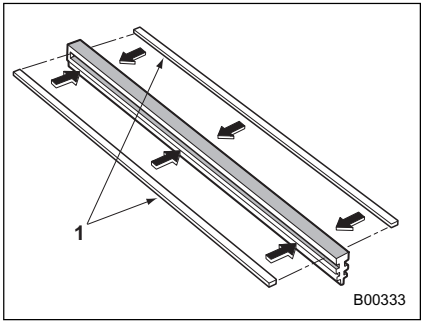

1) Metal spines

6. If the new blade rubber is not provided with two metal spines, remove the metal spines from the old blade rubber and install them in the new blade rubber.

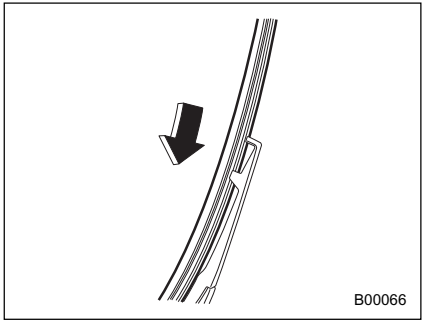

7. Align the claws of the plastic support with the grooves in the blade rubber assembly, then slide the blade rubber assembly into place.

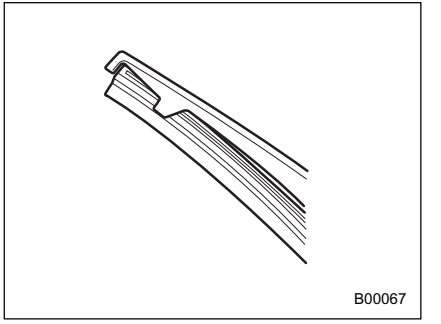

Securely lock the end of the plastic support as shown in the illustration. If the rub-

ber is not retained properly, the wiper may scratch the rear window glass.
8. Install the wiper blade assembly to the wiper arm. Make sure that it locks in place.
9. Lower the wiper arm.

Battery

WARNING

- **Before beginning work on or near any battery, be sure to extinguish all cigarettes, matches, and lighters. Never expose a battery to an open flame or electric sparks. Batteries give off a gas which is highly flammable and explosive.**
- **For safety, in case an explosion does occur, wear eye protection or shield your eyes when working near any battery. Never lean over a battery.**
- **Do not let battery fluid contact eyes, skin, fabrics, or paint because battery fluid is a corrosive acid. If battery fluid gets on your skin or in your eyes, immediately flush the area with water thoroughly. Seek medical help immediately if acid has entered the eyes.**
  If battery fluid is accidentally swallowed, immediately drink a large amount of milk or water, and seek medical attention immediately.
- **To lessen the risk of sparks, remove rings, metal watchbands, and other metal jewelry. Never allow metal tools to contact the positive battery terminal and anything connected to it WHILE you are at the same time in contact with any other metallic portion of the vehicle because a short circuit will result.**
- **Keep everyone including children away from the battery.**
- **Charge the battery in a well-ventilated area.**
- **Battery posts, terminals and related accessories contain lead and lead compounds, chemicals known to the State of California to cause cancer and reproductive harm. Batteries also contain other chemicals known to the State of California to cause cancer. Wash hands after handling.**

– CONTINUED –

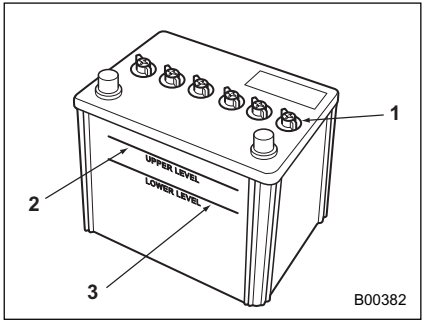

1) Cap
2) Upper level
3) Lower level

It is unnecessary to periodically check the battery fluid level or periodically refill with distilled water.
However, if the battery fluid level is below the lower level, remove the cap. Fill to the upper level with distilled water.

⚠ CAUTION

Never use more than 10 amperes when charging the battery because it will shorten battery life.

Fuses

⚠ CAUTION

Never replace a fuse with one having a higher rating or with material other than a fuse because serious damage or a fire could result.

The fuses are designed to melt during an overload to prevent damage to the wiring harness and electrical equipment. The fuses are located in two fuse boxes.

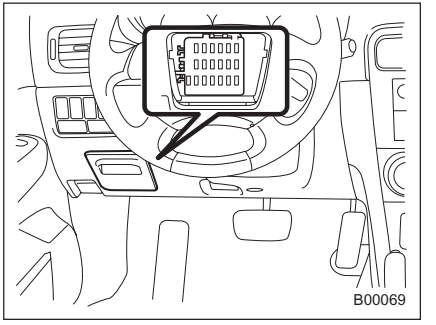

One is located under the instrument panel behind the cover on the driver's seat side. To remove the cover, pull it out.

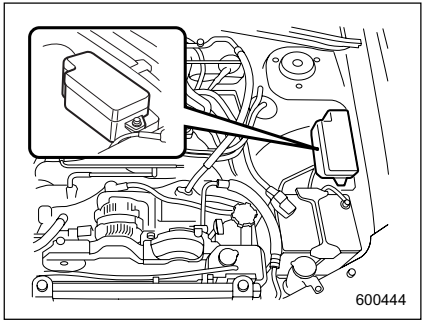

The other one is housed in the engine compartment.

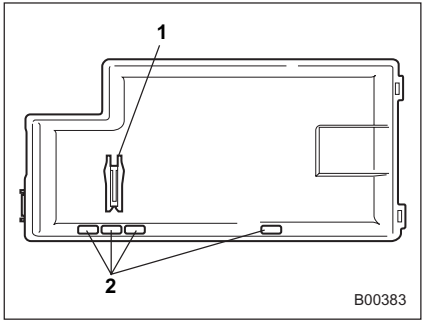

1) Fuse puller
2) Spare fuse

The fuse puller and spare fuses are stored

in the main fuse box cover in the engine compartment.

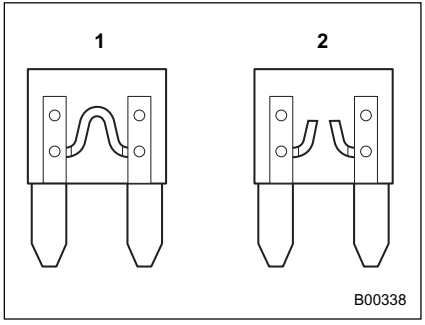

1) Good
2) Blown

If any lights, accessories or other electrical controls do not operate, inspect the corresponding fuse. If a fuse has blown, replace it.

1. Turn the ignition switch to the “LOCK” position and turn off all electrical accessories.
2. Remove the cover.
3. Determine which fuse may be blown. The back side of each fuse box cover and the “Fuses and circuits” section in chapter 12 in this manual show the circuit for each fuse.

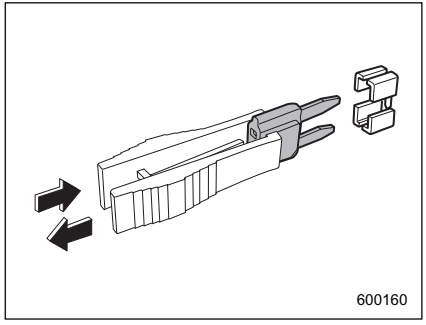

4. Pull out the fuse with the fuse puller.
5. Inspect the fuse. If it has blown, replace it with a spare fuse of the same rating.
6. If the same fuse blows again, this indicates that its system has a problem. Contact your SUBARU dealer for repairs.

Main fuse

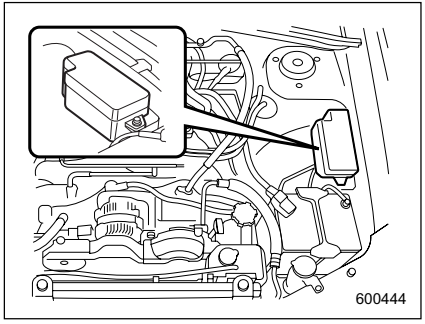

Main fuse box

The main fuses are designed to melt during an overload to prevent damage to the wiring harness and electrical equipment. Check the main fuses if any electrical component fails to operate (except the starter motor) and other fuses are good. A melted main fuse must be replaced. Use only replacements with the same specified rating as the melted main fuse. If a main fuse blows after it is replaced, have the electrical system checked by your nearest SUBARU dealer.

Installation of accessories

Always consult your SUBARU dealer before installing fog lights or any other electrical equipment in your vehicle. Such accessories may cause the electronic system to malfunction if they are incorrectly installed or if they are not suited for the vehicle.

Replacing bulbs

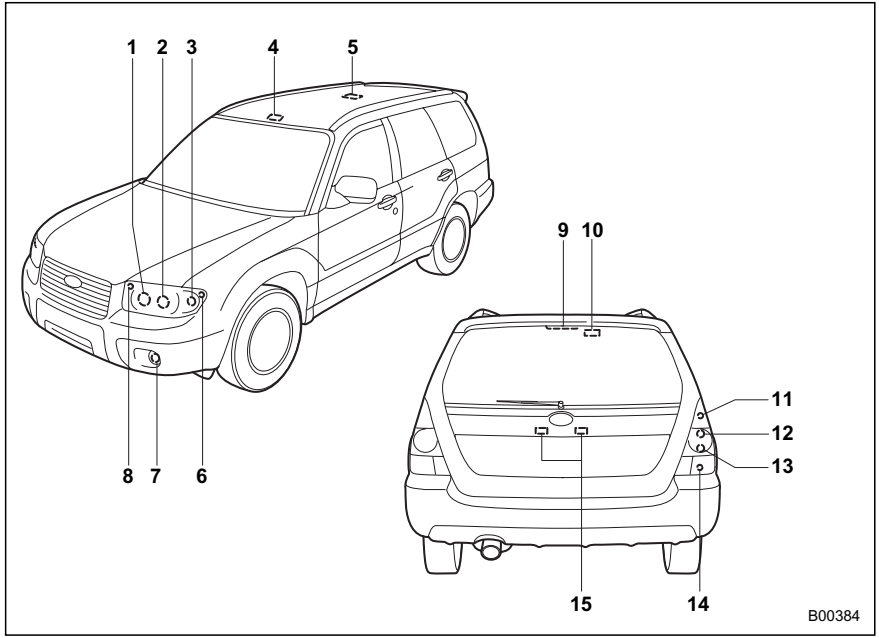

– CONTINUED –

		Wattage	Bulb No.
1)	High beam headlight	12V-60W	9005 (HB3)
2)	Low beam headlight		
	Canada-spec. 2.5XT	12V-35W	D2R
	All except Canada-spec. 2.5XT	12V-55W	H1
3)	Front turn signal light	12V-21W (Amber)	1474
4)	Map light	12V-8W	–
5)	Dome light	12V-8W	–
6)	Side marker light (Front)	12V-5W	168
7)	Front fog light	12V-55W	9006 (HB4)
8)	Parking light	12V-5W	168
9)	High mount stop light	12V-13W	912
10)	Cargo area light	12V-5W	–
11)	Tail/stop light	12V-21/5W	7443
12)	Backup light	12V-16W	921
13)	Rear turn signal light	12V-21W (Amber)	1474
14)	Tail/stop light	12V-21/5W	7443
15)	License plate light	12V-5W	168

CAUTION

Replace any bulb only with a new bulb of the specified wattage. Using a bulb of different wattage could result in a fire.

■ Headlights (Canada-spec. 2.5XT)

WARNING

High-intensity-discharge (HID) bulbs are used for the low beams of the headlights on the Canada-spec. 2.5XT. These HID bulbs use an extremely high voltage. To avoid the risk of an electric shock and resulting serious injury, you should not attempt to replace them. Neither should you attempt to replace the high-beam bulbs, remove/refit the headlight assemblies, or remove any headlight-assembly components. For replacement of the headlight bulbs (low-beam and high-beam), removal and installation of the headlight assemblies, and removal of headlight-assembly components, contact your SUBARU dealer.

■ Headlights (Except Canada-spec. 2.5XT)

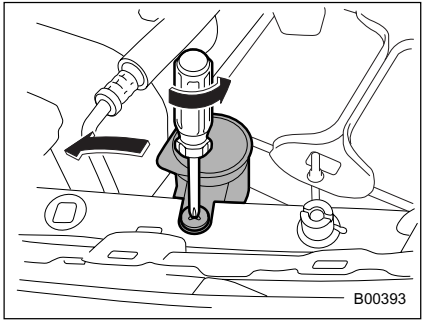

Before replacing the left-hand (battery-side) low- or high-beam light bulb, remove the screw that retains the windshield washer nozzle and tip the windshield washer nozzle sideways.

⚠ CAUTION

Halogen headlight bulbs become very hot while in use. If you touch the bulb surface with bare hands or greasy gloves, finger prints or grease on the bulb surface will develop into hot spots and cause the bulb to break. If there are finger prints or grease on the bulb surface, wipe them away with a soft cloth moistened with alcohol.

NOTE

- **If headlight aiming is required, consult your SUBARU dealer for proper adjustment of the headlight aim.**
- **It may be difficult to replace the bulbs. Have your SUBARU dealer replace the bulbs if necessary.**

▼ Low beam light bulbs

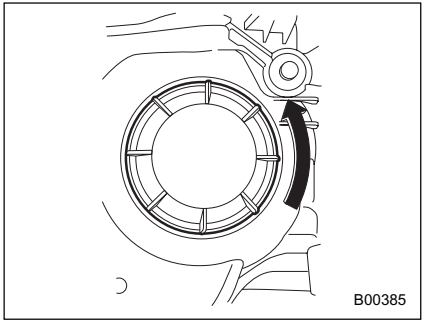

1. Remove the bulb cover, by turning it counterclockwise.

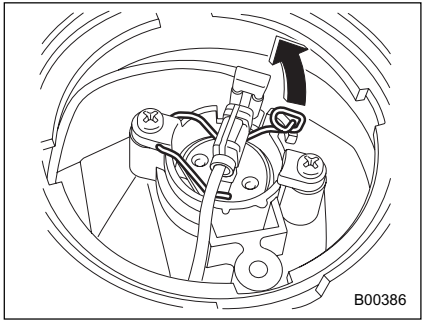

2. Remove the retainer spring, then pull out the bulb and electrical connector unit.

– CONTINUED –

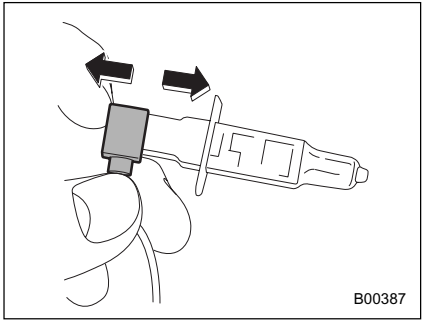

3. Disconnect the electrical connector from the bulb.
4. Install a new bulb into the electrical connector, then set the retainer spring securely.
5. Install the bulb cover.

▼ **High beam light bulbs**

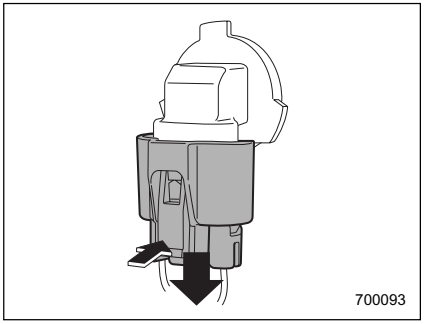

1. Disconnect the electrical connector from the bulb.

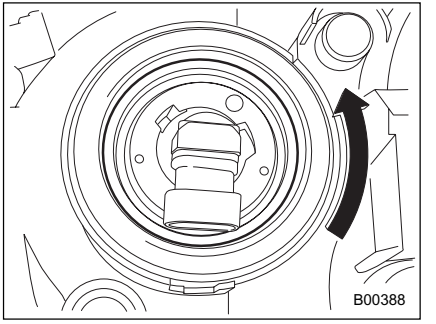

2. Remove the bulb from the headlight assembly by turning it counterclockwise.
3. Replace the bulb with new one.
4. Reconnect the electrical connector. At this time, use care not to touch the bulb surface.
5. To install the bulb to the headlight assembly, turn it clockwise until it clicks.

■ Rear combination lights

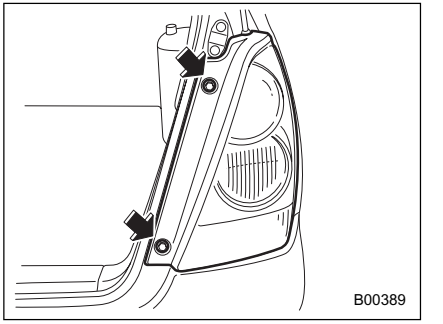

1. Remove the upper and lower screws. Then, slide the rear combination lamp assembly to the rear and remove it from the vehicle.

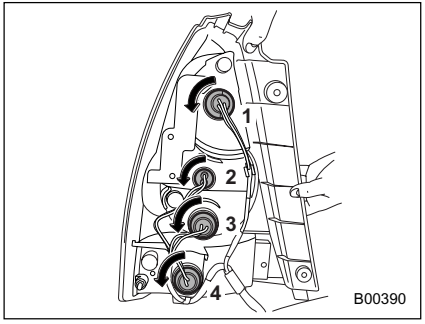

1) Tail/stop light
2) Backup light
3) Rear turn signal light
4) Tail/stop light

2. Remove the bulb holder from the rear combination light assembly by turning it counterclockwise.
3. Pull the bulb from the holder. Install a new bulb.
4. Set the bulb holder into the rear combination light assembly and turn it clockwise until it locks.
5. Reinstall the rear combination light assembly.

■ License plate light

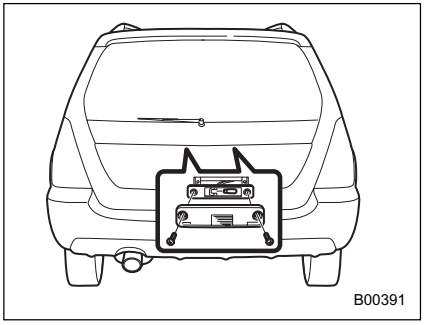

1. Remove the mounting screws using a Phillips screwdriver.
2. Remove the cover and lens.
3. Pull the bulb out of the socket. Install a new bulb.
4. Reinstall the lens and cover.
5. Tighten the mounting screws.

■ Dome light and map light

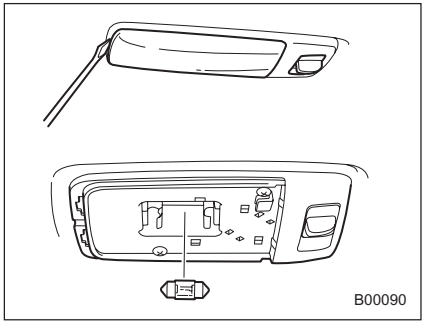

Dome light

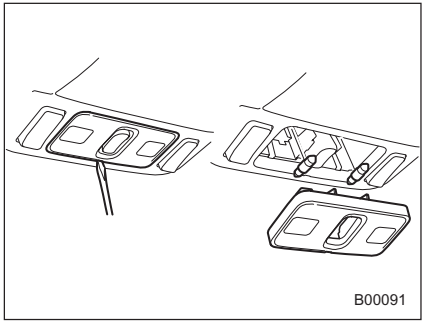

Map light

1. Remove the lens by prying the edge of

– CONTINUED –

the lens with a flat-head screwdriver.
2. Pull the bulb out of the socket. Install a new bulb.
3. Reinstall the lens.

■ High mount stop light

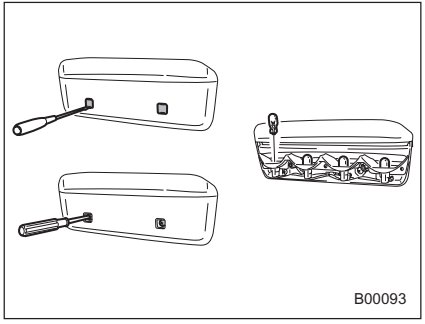

1. Remove the mounting screw covers by prying the edge with a flat-head screwdriver.
2. Remove the mounting screws using a Phillips screwdriver and then remove the high mount stop light cover.
3. Pull the bulb from the socket. Install a new bulb.
4. Reinstall the cover.
5. Tighten the mounting screws then reinstall the covers.

NOTE

Other bulbs may be difficult to replace. Have your SUBARU dealer replace these bulbs if necessary.

Specifications 12-2
Dimensions 12-2
Engine 12-3
Electrical system 12-3
Capacities 12-4
Tires 12-5
Wheel alignment 12-5
Fuses and circuits 12-6
Fuse panel located behind the instrument panel 12-6
Fuse panel located in the engine compartment .. 12-7
Bulb chart 12-9
Vehicle identification 12-10

Specifications

These specifications are subject to change without notice.

■ Dimensions

in (mm)

Item		2.5-liter non-turbo models		2.5-liter turbo models	
Drive system		AWD			
Transmission type		AT	MT	AT	MT
Overall length		176.6 (4,485)			
Overall width		68.3 (1,735)			
Overall height		62.6 (1,590)		62.4 (1,585)	
Wheel base		99.4 (2,525)			
Tread	Front	58.9 (1,495)			
	Rear	58.5 (1,485)			
Ground clearance*1		8.07 (205)		7.87 (200)	

*1: Measured with vehicle empty
AT: Automatic transmission
MT: Manual transmission

■ Engine

Engine model	EJ253 (2.5-liter, SOHC, non-turbo)	EJ255 (2.5-liter, DOHC, turbo)
Engine type	Horizontally opposed, liquid cooled 4 cylinder, 4-stroke gasoline engine	
Displacement cc (cu-in)	2,457 (150)	
Bore × Stroke in (mm)	3.92 × 3.11 (99.5 × 79.0)	
Compression ratio	10.0 : 1	8.4 : 1
Firing order	1 – 3 – 2 – 4	

■ Electrical system

Battery type and capacity (5HR)	Manual transmission	12V-48AH (55D23L)
	Automatic transmission	12V-52AH (75D23L)
Alternator	2.5-liter turbo models	12V-110A
	2.5-liter non-turbo models	12V-90A
Spark plugs	2.5-liter non-turbo models	FR5AP-11 (NGK)
	2.5-liter turbo models	ILFR6B (NGK)

– CONTINUED –

■ Capacities

Fuel tank			15.9 US gal (60 liters, 13.2 Imp gal)
Engine oil			4.2 US qt (4.0 liters, 3.5 Imp qt)
Transmission oil	MT		3.7 US qt (3.5 liters, 3.1 Imp qt)
	AT		9.8 US qt (9.3 liters, 8.2 Imp qt)
Front differential gear oil (AT vehicles)			1.3 US qt (1.2 liter, 1.1 Imp qt)
Rear differential gear oil			0.8 US qt (0.8 liter, 0.7 Imp qt)
Power steering fluid			0.7 US qt (0.7 liter, 0.6 Imp qt)
Engine coolant	2.5-liter non-turbo models	MT	7.3 US qt (6.9 liters, 6.1 Imp qt)
		AT	7.2 US qt (6.8 liters, 6.0 Imp qt)
	2.5-liter turbo models	MT	7.8 US qt (7.4 liters, 6.5 Imp qt)
		AT	7.7 US qt (7.3 liters, 6.4 Imp qt)

AT: Automatic transmission
MT: Manual transmission

■ Tires

Tire size			P215/60R16 94H	P215/55R17 93H
Wheel size			16 × 6 1/2 JJ	17 × 7 JJ
Pressure	Front	Light load	29 psi (200 kPa, 2.0 kgf/cm^2)	32 psi (220 kPa, 2.2 kgf/cm^2)
		Full load	29 psi (200 kPa, 2.0 kgf/cm^2)	32 psi (220 kPa, 2.2 kgf/cm^2)
	Rear	Light load	28 psi (190 kPa, 1.9 kgf/cm^2)	30 psi (210 kPa, 2.1 kgf/cm^2)
		Full load	36 psi (250 kPa, 2.5 kgf/cm^2)	32 psi (220 kPa, 2.2 kgf/cm^2)
		Trailer towing	41 psi (280 kPa, 2.8 kgf/cm^2)	36 psi (250 kPa, 2.5 kgf/cm^2)
Temporary spare tire	Size		T135/80D16	T135/90D16
	Pressure		60 psi (420 kPa, 4.2 kgf/cm^2)	

■ Wheel alignment

Item		2.5-liter non-turbo models	2.5-liter turbo models
Drive system		AWD	
Toe	Front	0 ± 0.12 in (0 ± 3 mm)	
	Rear	0.079 ± 0.12 in (2 ± 3 mm)	
Camber	Front	–0°25’ ± 45’	
	Rear	–0°50’ ± 45’	–0°55’ ± 45’

Fuses and circuits

■ Fuse panel located behind the instrument panel

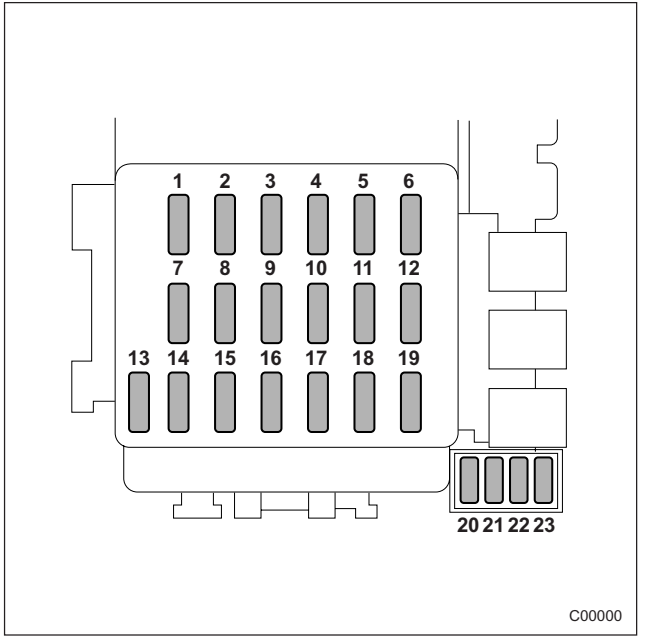

Fuse panel	Fuse rating	Circuit
1	15A	• Heater fan
2	15A	• Heater fan
3	15A	• Power door lock • Remote keyless entry
4	15A	• Cigarette lighter • Remote controlled rear view mirrors
5	10A	• Tail light • Parking light
6	15A	• SRS airbag
7	15A	• Fog light
8	30A	• ABS • Vehicle Dynamics Control system (models with Vehicle Dynamics Control system only)
9	15A	• Radio
10	Empty	
11	15A	• Engine ignition system • SRS airbag • AT control system
12	10A	• Illumination brightness control
13	20A	• Wiper deicer • Outside mirror defogger

Fuse panel	Fuse rating	Circuit
14	10A	• Meter
15	30A	• Windshield wiper and washer
16	20A	• Brake light
17	15A	• Air conditioner
18	15A	• Backup light • Cruise control
19	15A	• Power outlet (cargo)
20	15A	• Rear window wiper and washer
21	15A	• Ignition coil (Non-turbo model only)
22	15A	• Seat heater
23	Empty	

■ Fuse panel located in the engine compartment

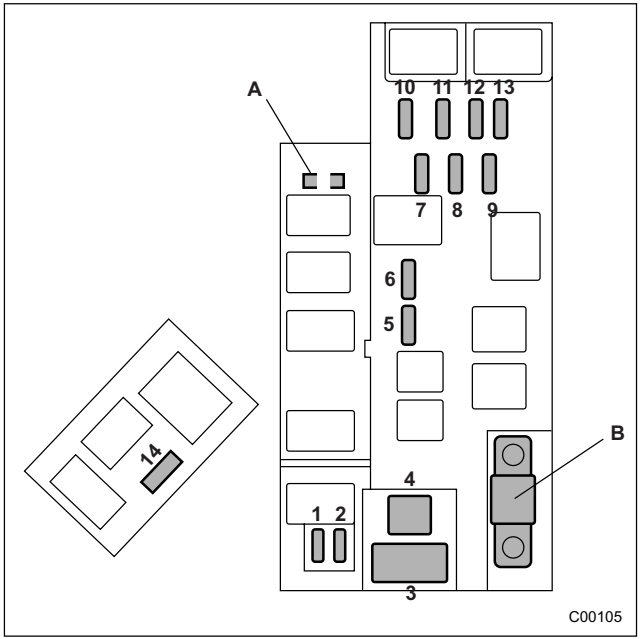

A) FWD socket (AT models without Vehicle Dynamics Control system)
B) Main fuse

– CONTINUED –

Fuse panel	Fuse rating	Circuit
1	30A	• Radiator cooling fan (Main)
2	30A	• Radiator cooling fan (Sub)
3	50A	• Vehicle Dynamics Control system (Models with Vehicle Dynamics Control system only)
	30A	• ABS motor
4	30A	• Engine sensor (Non-turbo models only)
5	20A	• Rear window defogger
6	15A	• Hazard warning flasher • Horn
7	15A	• Turn signal lights
8	10A	• Automatic transmission control unit
9	10A	• Alternator
10	15A	• Headlight (right side)
11	15A	• Headlight (left side)
12	20A	• Lighting switch
13	15A	• Clock • Interior light

Fuse panel	Fuse rating	Circuit
14	10A	• Secondary air combination valve (Turbo models only)

Bulb chart

Description	Wattage	Bulb type
Headlight		
High beam	12V-60W	9005 (HB3)
Low beam		
Canada-spec. 2.5XT	12V-35W	D2R
All except Canada-spec. 2.5XT	12V-55W	H1
Front fog light	12V-55W	9006 (HB4)
Front turn signal	12V-21W	1474
Parking light	12V-5W	168
Side marker light (Front)	12V-5W	168
Rear combination light		
Tail/stop light	12V-21/5W	7443
Turn signal	12V-21W (Amber)	1474
Tail/stop light	12V-21/5W	7443
Backup light	12V-16W	921
High mount stop light	12V-13W	912
License plate light	12V-5W	168
Cargo area light	12V-15W	–
Front ashtray light	12V-1.4W	–
Doom light	12V-8W	–
Map light	12V-8W	–

Vehicle identification

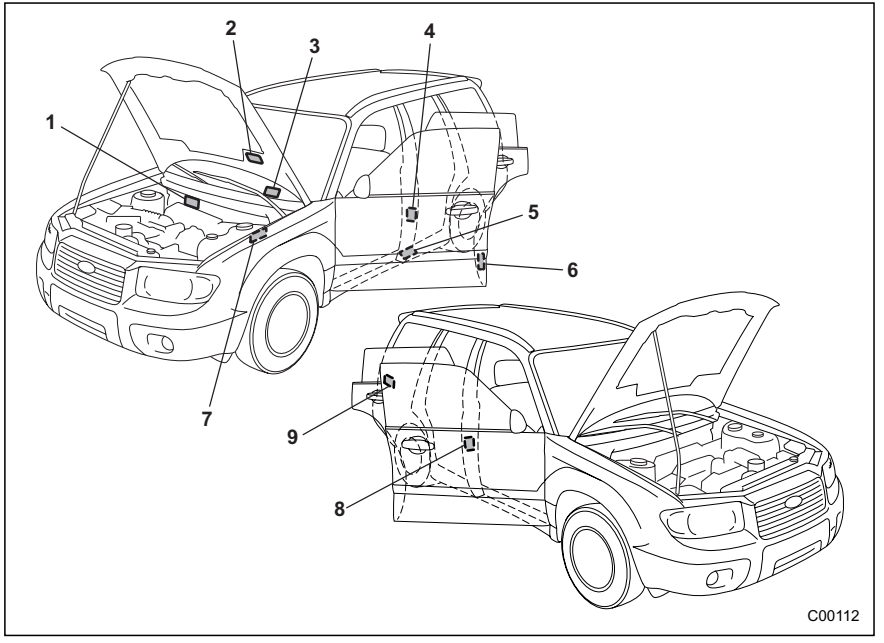

1) Vehicle identification number
2) Emission control label
3) Vehicle identification number plate
4) Tire inflation pressure plate
5) Certification plate
6) Bar cord label (U.S. only)
7) Model number plate
8) Radio noise label (Canada only)
9) Fuel label

Consumer information and Reporting safety defects

Tire information 13-2
Tire labeling 13-2
Recommended tire inflation pressure 13-5
Glossary of tire terminology 13-6
Tire care – maintenance and safety practices 13-7
Vehicle load limit – how to determine 13-8
Determining compatibility of tire and vehicle load capacities 13-10
Adverse safety consequences of overloading on handling and stopping and on tires 13-11
Steps for Determining Correct Load Limit 13-11
Uniform tire quality grading standards 13-12
Treadwear 13-12
Traction AA, A, B, C 13-12
Temperature A, B, C 13-12
Reporting safety defects (USA) 13-13

For U.S.A.
The following information has been compiled according to Code of Federal Regulations “Title 49, Part 575”.

Tire information

■ Tire labeling

Many markings (e.g. Tire size, Tire Identification Number or TIN) are placed on the sidewall of a tire by tire manufacturers. These marking can provide you with useful information on the tire.

▼ Tire size

Your vehicle comes equipped with P-Metric tire size. It is important to understand the sizing system in selecting the proper tire for your vehicles. Here is a brief review of the tire sizing system with a breakdown of its individual elements.

▽ P Metric

With the P-Metric system, Section Width is measured in millimeters. To convert millimeters into inches, divide by 25.4. The Aspect Ratio (Section Height divided by Section Width) helps provide more dimensional information about the tire size.

Example:

P	215 / 60	R	16
(1)	(2)	(3)	(4)	(5)

(1) P = Certain tire type used on light duty vehicles such as passenger cars
(2) Section Width in millimeters
(3) Aspect Ratio (= section height ÷ section width).
(4) R = Radial Construction
(5) Rim diameter in inches

▽ Load and Speed Rating Descriptions

The load and speed rating descriptions will appear following the size designation.
They provide two important facts about the tire. First, the number designation is its load index. Second, the letter designation indicates the tire’s speed rating.

Example:

P 215 / 60 R 16	94	H
Size designation	(6)	(7)

(6) Load Index: A numerical code

which specifies the maximum load a tire can carry at the speed indicated by its speed symbol, at maximum inflation pressure.
For example, “94” means 1,477 lbs (670 kg).

⚠ WARNING

Load indices apply only to the tire, not to the vehicle. Putting a load rated tire on any vehicle does not mean the vehicle can be loaded up to the tire’s rated load.

(7) Speed Rating: An alphabetical system describing a tire’s capability to travel at established and predetermined speeds.
For example, “H” means 130 mph (210 km/h)

⚠ WARNING

- **Speed ratings apply only to the tire, not to the vehicle. Putting a speed rated tire on any vehicle does not mean the vehicle can be operated at the tire’s rated speed.**
- **The speed rating is void if the tires are worn out, damaged, repaired, retreaded, or otherwise altered from their original condition. If tires are repaired, retreaded, or otherwise altered, they may not be suitable for original equipment tire designed loads and speeds.**

▼ Tire Identification Number (TIN)

Tire Identification Number (TIN) is marked on the intended outboard sidewall. The TIN is composed of four groups. Here is a brief review of the TIN with a breakdown of its individual elements.

DOT XX XX XXX XXXX
(1) (2) (3) (4)

(1) Manufacturer’s Identification Mark
(2) Tire Size
(3) Tire Type Code
(4) Date of Manufacture
The first two figures identify the week, starting with “01” to represent the first full week of the calendar year; the second two figures represent the year. For example, 0101 means the 1st week of 2001.

▼ Other markings

The following makings are also placed on the sidewall.

▽ Maximum permissible inflation pressure

The maximum cold inflation pressure to which this tire may be inflated. For example, “300 kpa (44 PSI) MAX. PRESS”

▽ Maximum load rating

The load rating at the maximum permissible weight load for this tire. For example, “MAX. LOAD 670 kg (1477 LBS) @ 300 kpa (44 PSI) MAX. PRESS.”

– CONTINUED –

⚠ WARNING

Maximum load rating applies only to the tire, not to the vehicle. Putting a load rated tire on any vehicle does not mean the vehicle can be loaded up to the tire's rated load.

▽ **Construction type**

Applicable construction of this tire.
For example, "TUBELESS STEEL BELTED RADIAL"

▽ **Construction**

The generic name of each cord material used in the plies (both sidewall and tread area) of this tire.
For example, "PLIES: SIDEWALL POLYESTER 1 TREAD POLYESTER 1 + STEEL 2 + NYLON 1"

▽ **Uniform Tire Quality Grading (UTQG)**

For details, refer to "Uniform tire quality grading standards" in this chapter.

■ Recommended tire inflation pressure

▼ Recommended cold tire inflation pressure

Recommended cold tire inflation pressure for your vehicle's tires is as follows,

Tire size			P215/60R16 94H	P215/55R17 93H
Wheel size			$16 \times 6^1/_2$ JJ	17×7 JJ
Pressure	Front	Light load	29 psi (200 kPa, 2.0 kgf/cm^2)	32 psi (220 kPa, 2.2 kgf/cm^2)
		Full load	29 psi (200 kPa, 2.0 kgf/cm^2)	32 psi (220 kPa, 2.2 kgf/cm^2)
	Rear	Light load	28 psi (190 kPa, 1.9 kgf/cm^2)	30 psi (210 kPa, 2.1 kgf/cm^2)
		Full load	36 psi (250 kPa, 2.5 kgf/cm^2)	32 psi (220 kPa, 2.2 kgf/cm^2)
		Trailer towing	41 psi (280 kPa, 2.8 kgf/cm^2)	36 psi (250 kPa, 2.5 kgf/cm^2)
Temporary spare tire	Size		T135/80D16	T135/90D16
	Pressure		60 psi (420 kPa, 4.2 kgf/cm^2)	

– CONTINUED –

▼ Vehicle placard

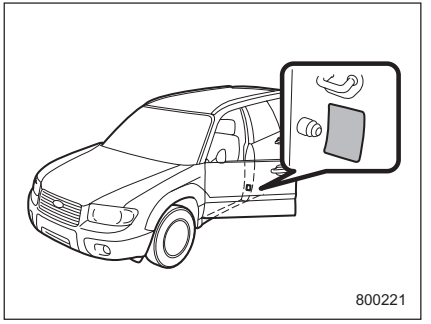

The vehicle placard is affixed to the driver's side door pillar.

Example:

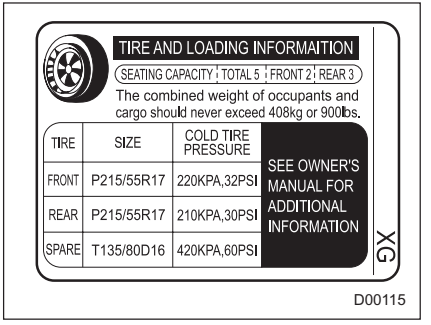

The vehicle placard shows original tire size, recommended cold tire inflation pressure on each tire at maximum loaded vehicle weight, seating capacity and loading information.

▼ Adverse safety consequences of under-inflation

Driving at high speeds with excessively low tire pressures can cause the tires to flex severely and to rapidly become hot. A sharp increase in temperature could cause tread separation, and failure of the tire(s). Possible resulting loss of vehicle control could lead to an accident.

▼ Measuring and adjusting air pressure to achieve proper inflation

Check and, if necessary, adjust the pressure of each tire (including the spare) at least once a month and before any long journey. Check the tire pressures when the tires are cold. Use a pressure gauge to adjust the tire pressures to the specific values. Driving even a short distance warms up the tires and increases the tire pressures. Also, the tire pressures are affected by the outside temperature. It is best to check tire pressure outdoors before driving the vehicle. When a tire becomes warm, the air inside it expands, causing the tire pressure to increase. Be careful not to mistakenly release air from a warm tire to reduce its pressure.

■ Glossary of tire terminology

- **Cold tire pressure**

The pressure in a tire that has been driven less than 1 mile or has been standing for three hours or more.

- **Maximum inflation pressure**

The maximum cold inflation pressure to which a tire may be inflated.

- **Recommended inflation pressure**

The cold inflation pressure recommended by a vehicle manufacturer.

- **Intended outboard sidewall**

1)The sidewall that contains a whitewall, bears white lettering or bears manufacturer, brand, and/or model name molding that is higher or deeper than the same molding on the other sidewall of the tire, or
2)The outward facing sidewall of an

asymmetrical tire that has a particular side that must always face outward when mounting on a vehicle.

- **Accessory weight**

The combined weight (in excess of those standard items which may be replaced) of floor mats, leather seats and cross bars to the extent that these items are available as factory-installed equipment (whether installed or not).

- **Curb weight**

The weight of a motor vehicle with standard equipment including the maximum capacity of fuel, oil, and coolant and air conditioning.

- **Maximum loaded vehicle weight**

The sum of curb weight, accessory weight, vehicle capacity weight and production options weight.

- **Normal occupant weight**

150 lbs (68 kg) times the number of occupants (3 occupants).

- **Occupant distribution**

Distribution of occupants in a vehicle, 2 in front, 1 in rear seat.

- **Production options weight**

The combined weight of those installed regular production options weighing over 5.1 lbs (2.3 kg) in excess of those standards items which they replace, not previously considered in curb weight or accessory weight.

- **Vehicle capacity weight**

The total weight of cargo, luggage and occupants that can be added to the vehicle.

- **Vehicle maximum load on a tire**

Load on an individual tire that is determined by distributing to each axle its share of the maximum loaded vehicle weight and dividing by two.

- **Vehicle normal load on a tire**

Load on an individual tire that is determined by distributing to each axle its share of the curb weight, accessory weight, and normal occupant weight and dividing by two.

■ Tire care – maintenance and safety practices

- Check on a daily basis that the tires are free from serious damage, nails, and stones. At the same time, check the tires for abnormal wear.
- Inspect the tire tread regularly and replace the tires before their tread wear indicators become visible. When a tire's tread wear indicator becomes visible, the tire is worn beyond the acceptable limit and must be replaced immediately. With a tire in this condition, driving at even low speeds in wet weather can cause the vehicle to hydroplane. Possible resulting loss of vehicle control can lead to an accident.
- To maximize the life of each tire and ensure that the tires wear uniformly, it is best to rotate the tires every 7,500 miles (12,500 km). Rotating the tires involves switching the front and rear tires on the right-hand side of the vehicle and similarly switching the front and rear tires on the left-hand side of the vehicle. (Each tire must be kept on its original side of the vehicle.) Replace any damaged or unevenly worn tire at the time of rotation. After tire rotation, adjust the tire pressures and make sure the wheel nuts are correctly tightened. A tightening torque specification and a tightening sequence specification for the wheel nuts can be found "Flat tires" in Chapter 9.

– CONTINUED –

■ Vehicle load limit – how to determine

The load capacity of your vehicle is determined by weight, not by available cargo space. The load limit of your vehicle is shown on the vehicle placard attached to the driver's side B-pillar. Locate the statement "The combined weight of occupants and cargo should never exceed XXX kg or XXX lbs" on your vehicle's placard.
The vehicle placard also shows seating capacity of your vehicle.
The total load capacity includes the total weight of driver and all passengers and their belongings, any cargo, any optional equipment such as a trailer hitch, roof rack or bike carrier, etc., and the tongue load of a trailer. Therefore cargo capacity can be calculated by the following method.

Cargo capacity = Load limit – (total weight of occupants + total weight of optional equipment + tongue load of a trailer (if applicable))

For towing capacity information and weight limits, refer to "Trailer towing" in Chapter 8.

▼ Calculating total and load capacities varying seating configurations

Calculate the available load capacity as shown in the following examples:

Example 1A

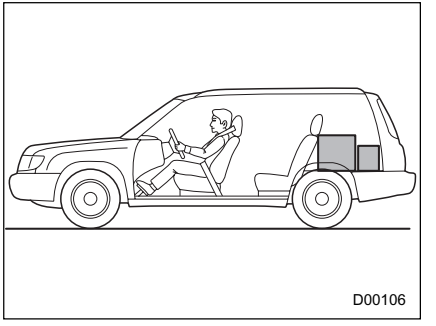

Vehicle capacity weight of the vehicle is 900 lbs (408 kg), which is indicated on the vehicle placard with the statement "The combined weight of occupants and cargo should never exceed 900 lbs or 408 kg".

For example, if the vehicle has one occupant weighing 154 lbs (70 kg) plus cargo weighing 662 lbs (300 kg).

1. Calculate the total weight.

Total weight

= 154 lbs (70 kg) (Occupant) + 662 lbs (300 kg) (Cargo)

= **816 lbs (370 kg)**

2. Calculate the available load capacity by subtracting the total weight from the vehicle capacity weight of 900 lbs (408 kg).

Available Load Capacity

= 900 lbs (408 kg) (Vehicle capacity weight) – 816 lbs (370 kg) (Total weight)

= **84 lbs (38 kg)**

3. The result of step 2 shows that a further 84 lbs (38 kg) of cargo can be carried.

Example 1B

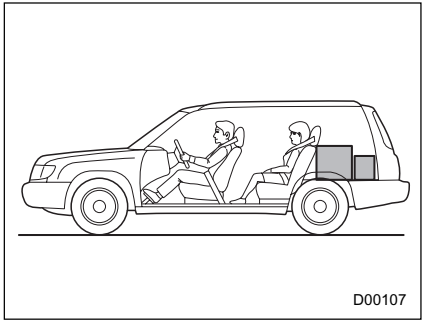

For example, if a person weighing 176 lbs (80 kg) now enters the same vehicle (bringing the number of occupants to two), the calculations are as follows:

1. Calculate the total weight.

Total weight

= 154 lbs (70 kg) (Occupant) + 176 lbs (80 kg)

+ 662 lbs (300 kg) (Cargo)

= **992 lbs (450 kg)**

2. Calculate the available load capacity.

Available Load Capacity

= 900 lbs (408 kg) (Vehicle capacity weight) – 992 lbs (450 kg) (Total weight)

= **–92 lbs (–42 kg)**

3. The total weight now exceeds the capacity weight by 92 lbs (42 kg), so the cargo weight must be reduced by 92 lbs (42 kg) or more.

Example 2A

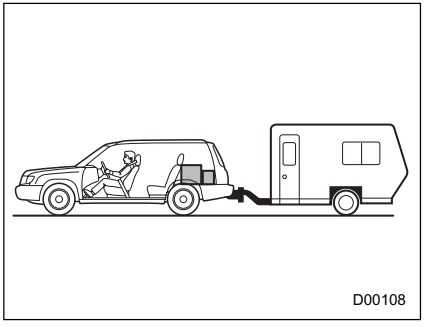

Vehicle capacity weight of the vehicle is 900 lbs (408 kg), which is indicated on the vehicle placard with the statement “The combined weight of occupants and cargo should never exceed 408 kg or 900 lbs”.

For example, the vehicle has one occupant weighing 165 lbs (75 kg) plus cargo weighing 375 lbs (170 kg). In addition, the vehicle is fitted with a trailer hitch weighing 22 lbs (10 kg), to which is attached a trailer weighing 1,764 lbs (800 kg). 10% of the trailer weight is applied to the trailer tongue (i.e. Tongue load = 176 lbs (80 kg)).

1. Calculate the total weight.

Total weight

= 165 lbs (75 kg) (Occupant) + 375 lbs (170 kg) (Cargo)

+ 22 lbs (10 kg) (Trailer hitch) + 176 lbs (80 kg) (Tongue load)

= **738 lbs (335 kg)**

2. Calculate the available load capacity.

– CONTINUED –

Available Load Capacity

= 900 lbs (408 kg) (Vehicle capacity weight) – 738 lbs (335 kg) (Total weight)

= **162 lbs (73 kg)**

3. The result of step 2 shows that a further 162 lbs (73 kg) of cargo can be carried.

Example 2B

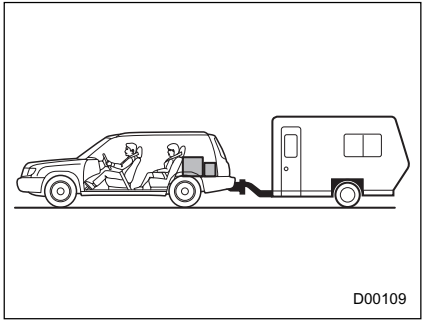

For example, if a person weighing 143 lbs (65 kg) and a child weighing 40 lbs (18 kg) now enter the same vehicle (bringing the number of occupants to three), and a child restraint system weighing 11 lbs (5 kg) is installed in the vehicle for the child to use, the calculations are as follows:

1. Calculate the total weight.

Total weight

= 165 lbs (75 kg) (Occupant) + 143 lbs (65 kg) (Occupant)

+ 40 lbs (18 kg) (Occupant)

+ 11 lbs (5 kg) (Child restraint) + 375 lbs (170 kg) (Cargo)

+ 22 lbs (10 kg) (Trailer hitch) + 176 lbs (80 kg) (Tongue load)

= **932 lbs (423 kg)**

2. Calculate the available load capacity.

Available Load Capacity

= 900 lbs (408 kg) (Vehicle capacity weight) – 932 lbs (423 kg) (Total weight)

= **–32 lbs (–15 kg)**

3. The total weight now exceeds the capacity weight by 32 lbs (15 kg), so the cargo weight must be reduced by 32 lbs (15 kg) or more.

■ Determining compatibility of tire and vehicle load capacities

The sum of four tires' maximum load ratings must exceed the maximum loaded vehicle weight ("GVWR"). In addition, sum of the maximum load ratings of two front tires and of two rear tires must exceed each axle's maximum loaded capacity ("GAWR"). Original equipment tires are designed to fulfill those conditions.

The maximum loaded vehicle weight is referred to Gross Vehicle Weight Rating (GVWR). And each axle's maximum loaded capacity is referred to Gross Axle Weight Rating (GAWR). The GVWR and each axle's GAWR are shown on the vehicle certification label affixed to the driver's door.

The GVWR and front and rear GAWRs are determined by not only the maximum load rating of tires but also loaded capacities of the vehicle's

suspension, axles and other parts of the body.
Therefore, this means that the vehicle cannot necessarily be loaded up to the tire's maximum load rating on the tire sidewall.

■ Adverse safety consequences of overloading on handling and stopping and on tires

Overloading could affect vehicle handling, stopping distance, vehicle and tire as shown in the following. This could lead to an accident and possibly result in severe personal injury.

- Vehicle stability will deteriorate.
- Heavy and/or high-mounted loads could increase the risk of rollover.
- Stopping distance will increase.
- Brakes could overheat and fail.
- Suspension, bearings, axles and other parts of the body could break or experience accelerated wear that will shorten vehicle life.
- Tires could fail.
- Tread separation could occur.
- Tire could separate from its rim.

■ Steps for Determining Correct Load Limit

1. Locate the statement "The combined weight of occupants and cargo should never exceed XXX pounds" on your vehicle's placard.
2. Determine the combined weight of the driver and passengers that will be riding in your vehicle.
3. Subtract the combined weight of the driver and passengers from XXX kilograms or XXX pounds.
4. The resulting figure equals the available amount of cargo and luggage load capacity. For example, if the "XXX" amount equals 1,400 lbs (635kg). and there will be five- 150 lbs (68 kg) passengers in your vehicle, the amount of available cargo and luggage load capacity is 650 lbs. (1,400 – 750 (5 × 150) = 650 lbs)
5. Determine the combined weight of luggage and cargo being loaded on the vehicle. That weight may not safely exceed the available cargo and luggage load capacity calculated in Step 4.
6. If your vehicle will be towing a trailer, load from your trailer will be transferred to your vehicle. Consult this manual to determine how this reduces the available cargo and luggage load capacity of your vehicle.

Uniform tire quality grading standards

This information indicates the relative performance of passenger car tires in the area of treadwear, traction, and temperature resistance. This is to aid the consumer in making an informed choice in the purchase of tires.
Quality grades can be found where applicable on the tire sidewall between tread shoulder and maximum section width. For example:

Treadwear 200 Traction AA Temperature A

The quality grades apply to new pneumatic tires for use on passenger cars. However, they do not apply to deep tread, winter type snow tires, spacesaver or temporary use spare tires, tires with nominal rim diameters of 12 inches or less, or to some limited production tires.

All passenger car tires must confirm to Federal Safety Requirements in addition to these grades.

■ Treadwear

The treadwear grade is a comparative rating based on the wear rate of the tire when tested under controlled conditions on a specified government test course.
For example, a tire graded 150 would wear one and one-half (1-1/2) times as well on the government course as a tire graded 100. The relative performance of tires depends upon the actual conditions of their use, however, and may depart significantly from the norm due to variations in driving habits, service practices and differences in road characteristics and climate.

■ Traction AA, A, B, C

The traction grades, from highest to lowest, are AA, A, B and C. Those grades represent the tire's ability to stop on wet pavement as measured under controlled conditions on specified government test surfaces of asphalt and concrete. A tire marked C may have poor traction performance.

⚠ WARNING

The traction grade assigned to this tire is based on straight-ahead braking traction tests, and does not include acceleration, cornering, hydroplaning, or peak traction characteristics.

■ Temperature A, B, C

The temperature grades are A (the highest), B, and C, representing the tire's resistance to the generation of heat and its ability to dissipate heat when tested under controlled conditions on a specified indoor laboratory test wheel. Sustained high temperature can cause the material of the tire to degenerate and reduce tire life, and excessive temperature can lead to sudden tire failure. The grade C corresponds to a level of performance which all passenger car tires must meet under the Federal Motor Vehicle Safety Standards No. 109. Grades B and A represent higher levels of performance on the laboratory test wheel than the minimum required by law.

⚠ WARNING

The temperature grade for this tire is established for a tire that is properly inflated and not overloaded. Excessive speed, underinflation, or excessive loading, either separately or in combination, can cause heat buildup and possible tire failure.

Reporting safety defects (USA)

If you believe that your vehicle has a defect which could cause a crash or could cause injury or death, you should immediately inform the National Highway Traffic Safety Administration (NHTSA) in addition to notifying Subaru of America, Inc.

If NHTSA receives similar complaints, it may open an investigation, and if it finds that a safety defect exists in a group of vehicles, it may order a recall and remedy campaign. However, NHTSA cannot become involved in individual problems between you, your dealer, or Subaru of America, Inc. To contact NHTSA, you may either call the Auto Safety Hotline toll-free at 1-800-424-9393 (or 366-0123 in the Washington D.C. area) or write to: NHTSA, U.S. Department of Transportation, Washington, D.C. 20590. You can also obtain other information about motor vehicle safety from the Hotline.

A

ABS 7-16
Warning light 3-12, 7-17
Accessory power outlets 6-8
Active head restraint 1-6
Air cleaner element 11-15
Air filtration system 4-12
Alarm system 2-12
All-Wheel Drive warning light (AT vehicles) 3-15
Aluminum wheel 11-34
Aluminum wheel cleaning 10-3
Antenna system 5-2
Anti-lock brake system warning light (ABS) 3-12, 7-16
Arming the system 2-13
Armrest 1-9, 6-4
Ashtray 6-11, 10-5
Audio set 5-3
Auto-dimming mirror/compass 3-27
Automatic climate control system 4-8
Automatic transmission 7-10
Capacities 12-4
Fluid 11-19
Selector lever 7-11
Shift lock release 7-14
Temperature warning (AT OIL TEMP) 3-12
Automatic/Emergency Locking Retractor (A/ELR) 1-11

B

Battery 11-39
Jump starting 9-7
Replacing (remote keyless entry) 2-8
Brake
Booster 11-26
Fluid 11-24
Pad and lining 11-28
Parking 11-29
Pedal 11-26
System 7-15
Warning light 3-14
Brake pedal 11-26
Free play 11-26
Reserve distance 11-27
Braking 7-15
Braking tips 7-15
Breaking-in of new brake pads and linings 11-28
Bulb
Chart 12-9
Replacing 11-43

C

Capacities 12-4
Cargo area cover (if equipped) 6-12
Cargo area light 6-2
Cargo tie-down hooks 6-14
Center console 6-4
Charge warning light 3-12
CHECK ENGINE warning light/Malfunction indicator lamp 3-11
Child restraint systems 1-24
Installation with seatbelt 1-27
Top tether anchorages 1-34
Child safety 5
Child safety locks 2-17

Chime
Key 3-5
Seatbelt 1-12, 3-9
Cigarette lighter socket 6-9
Clock 3-17
Clutch (MT)
Fluid 11-25
Pedal 11-27
Coat hook 6-12
Convenience net 6-6
Coolant 11-12
Cooling system 11-11
Corrosion protection 8-10, 10-3
Cruise control 7-26
Cruise control indicator light 3-16
Cup holders 6-7

D

Dashboard storage compartment 6-6
Daytime running light system 3-19
Differential gear oil
Front (AT vehicles) 11-21
Rear 11-22
Dimensions 12-2
Disarming the system 2-14
Disc brake pad wear warning indicators 7-16
Dome light 6-2
Door locks 2-4
Door open warning light 3-15
Drive belt 11-17
Driving
Car phone/cell phone 7
Drinking 6
Drugs 6
Foreign countries 8-4
Pets 7
Snowy and icy roads 8-9
Tired or sleepy 7
Driving tips 7-10, 8-5

E

Electronic Brake Force Distribution (EBD) system 7-18
Emergency Locking Retractor (ELR) 1-11
Engine
Compartment overview 11-6
Coolant 11-12
Exhaust gas (Carbon monoxide) 8-2
Hood 11-4
Oil 11-8
Overheating 9-10
Starting 7-7
Stopping 7-8
Exterior care 10-2

F

Flat tires 9-3
Floor mat 6-11
Fluid level
Automatic transmission 11-19
Brake 11-24
Clutch (MT vehicles) 11-25
Power steering 11-23
Front differential gear oil (AT vehicles) 11-21

Front fog light button 3-21
Front seatbelt pretensioners 1-20
Front seats 1-2
Fore and aft adjustment 1-3, 1-4
Reclining 1-3, 1-5
Fuel 7-2
Economy hints 8-2
Filler lid and cap 7-3
Requirements 7-2
Fuses 11-40
Fuses and circuits 12-6

G

GAWR 8-12
Glove box 6-4
Gross Axle Weight Rating 8-12
Gross Vehicle Weight Rating 8-12
GVWR 8-12

H

Hazard warning flasher 3-6
Head restraint adjustment 1-5
Headlight
Beam leveler 3-21
Flasher 3-19
Headlights 3-18
Heater operation 4-5
High beam indicator light 3-16
Hill holder 7-25, 11-28
Horn 3-30

I

Ignition switch 3-3
Illuminated entry 2-8
Illumination brightness control 3-20
Immobilizer indicator light 2-3
Indicator light 3-9
Inside mirror 3-26
Interior lights 6-2

J

Jack and jack handle 9-15
Jump starting 9-7

K

Key
Number 2-2
Reminder chime 3-5
Key interlock release (AT vehicles) 3-5
Keys 2-2

L

Leather seat materials 10-5
Light control switch 3-18
Limited slip differential (LSD) 7-14
Loading your vehicle 8-11
Low fuel warning light 3-15
Lower and tether anchorages 1-31
LSD (Limited slip differential) 7-14
Lumbar support (Drivers seat only) 1-5

M
Main fuse 11-41
Maintenance
Precautions 11-3
Schedule 11-3
Seatbelt 1-19
Tools 9-14
Malfunction indicator lamp 3-11
Manual
Climate control system 4-3
Seat 1-3
Transmission 7-9
Transmission oil 11-18
Map lights 6-3
Maximum load limits 8-18
Meters and gauges 3-6
Mirrors 3-26
Moonroof 2-21, 9-14

N
New vehicle break-in driving 8-2

O
Odometer/Trip meter 3-6
Off road driving 8-6
Oil filter 11-8
Oil level
Engine 11-8
Manual transmission 11-18
Rear differential 11-22
Oil pressure warning light 3-12
Outside mirrors 3-28
Outside temperature indicator 3-8
Overhead console 6-6

P
Parking brake 7-24, 11-29
Stroke 11-29
Parking light switch 3-21
Parking your vehicle 7-24
Periodic inspections 8-4
Power
Door locking switches 2-6
Seat 1-4
Steering 7-15
Steering fluid level 11-23
Windows 2-18

R
Rear
Combination lights 11-46
Differential gear oil level 11-22
Gate 2-20, 9-13
Seats 1-7
Viscous limited slip differential (LSD) 7-14
Rear window
Defogger button 3-25
Wiper and washer switch 3-24
Wiper blade 11-37
Remote keyless entry system 2-6
Replacing
Air cleaner element 11-15

Battery (remote keyless entry) 2-8
Bulbs 11-43
Transmitters 2-9
Rocking the vehicle 8-11
Roof rail and crossbar 8-13

S

Safety
Precautions when driving 4
Symbol 2
Warnings 2
Seat height adjustment (drivers seat) 1-4
Seatbelt 4
Extender 1-19
Maintenance 1-19
Pretensioners 1-20
Safety tips 1-10
Warning light and chime 1-12, 3-9
Seatbelts 1-10
Seats
Fabric 10-4
Heater 1-6
Selector lever (AT vehicles) 7-11
Self-leveling rear suspension 7-29
Shift lock release 7-14
Shift position indicator 3-16
Shopping bag hook 6-13
Snow tires 8-10
Snowy and icy roads 8-9
Spark plugs 11-17
Specifications 12-2
Speedometer 3-6
SRS
Airbag system warning light 3-10
Frontal airbag 1-41
Side airbag 1-53
SRS airbag (Supplemental Restraint System airbag) ... 4, 1-36
Steering wheel
Power 7-15
Tilt wheel 3-29
Storage compartments 6-4
Sun visors 6-3
Supplemental Restraint System airbag 1-36
Synthetic leather upholstery 10-5

T

Tachometer 3-7
Temperature gauge 3-8
Temperature warning (AT OIL TEMP) 3-12
Tie-down hooks 9-11
Tilt steering wheel 3-29
Tire
Chains 8-10
Inspection 11-30
Pressures and wear 11-30
Replacement 11-33
Rotation 11-32
Types 11-29
Top tether anchorages 1-34
Towing 9-10
All wheels on the ground 9-12
Flat-bed truck 9-12
Trailer
Connecting 8-16

Hitch 8-16, 8-21
Towing 8-18
Towing tips 8-23
Turn signal indicator lights 3-16
Turn signal lever 3-20

U

Under-floor storage compartment 6-14

V

Valet mode 2-15
Vanity mirror 6-3
Vehicle
Capacity weight 8-12
Identification 12-10
Symbols 3
Vehicle Dynamics Control 7-19
Ventilator 4-2

W

Warning and indicator lights 3-9
Warning lights
ABS 3-12
All-Wheel Drive 3-15
Anti-lock Brake system 3-12
AT OIL TEMPerature 3-12
Brake system 3-14
Charge 3-12
CHECK ENGINE 3-11
Door open 3-15
Low fuel 3-15
Oil pressure 3-12
Seatbelt 1-12, 3-9
SRS airbag system 3-10
Vehicle Dynamics Control 3-16
Warranties and maintenance 8-18
Washing 10-2
Waxing and polishing 10-3
Wear indicators 11-32
Wheel
Alignment 12-5
Aluminum 11-34
Balance 11-32
Replacement 11-33
Windows 2-18
Windshield
Washer fluid 11-34
Wiper and washer switches 3-23
Wiper deicer 3-25
Windshield wiper blades
Replacement 11-36
Winter driving 8-7
Wiper and washer 3-22

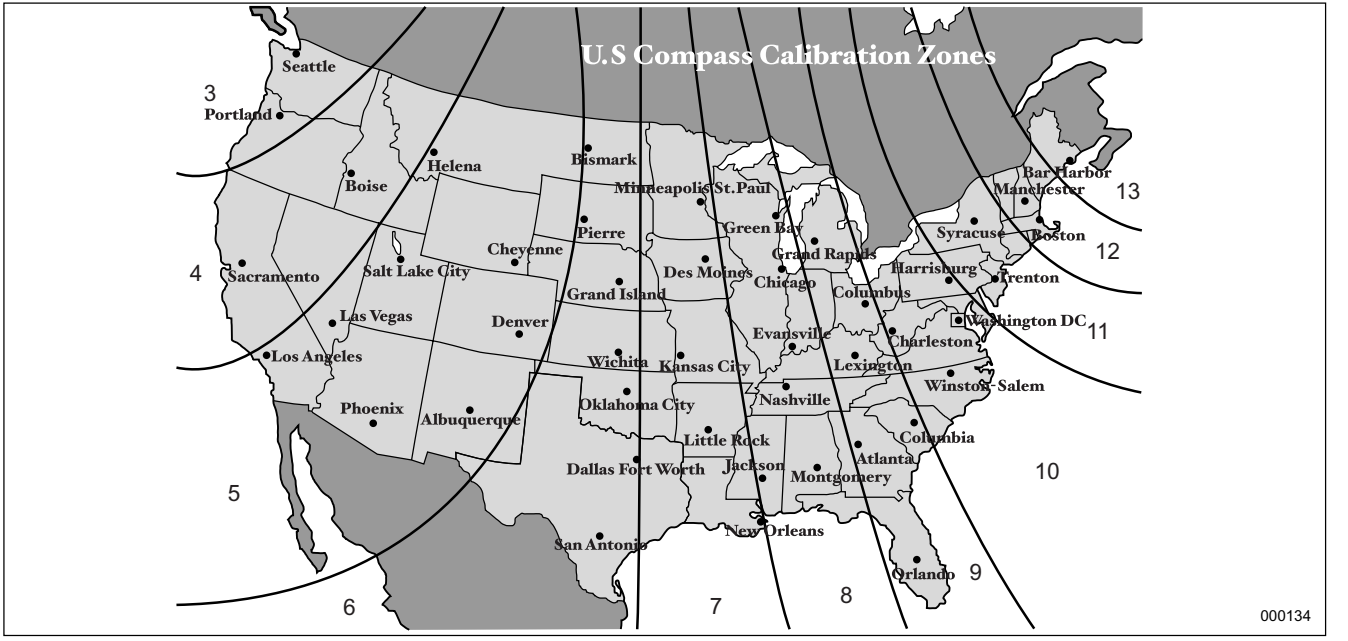
U.S Compass Calibration Zones
Seattle
Portland
Helena
Boise
Bismark
Minneapolis St.Paul
Pierre
Green Bay
Grand Rapids
Cheyenne
Salt Lake City
Sacramento
Des Moines
Chicago
Grand Island
Denver
Las Vegas
Los Angeles
Wichita
Kansas City
Evansville
Columbus
Harrisburg
Trenton
Syracuse
Boston
Bar Harbor
Manchester
Washington DC
Charleston
Lexington
Winston-Salem
Nashville
Oklahoma City
Phoenix
Albuquerque
Little Rock
Columbia
Atlanta
Dallas Fort Worth
Jackson
Montgomery
New Orleans
San Antonio
Orlando
3
4
5
6
7
8
9
10
11
12
13
000134

GAS STATION REFERENCE

Fuel:

▼ Non-turbo models

Use only unleaded gasoline with an octane rating of 87 AKI or higher.

▼ Turbo models

Use premium unleaded gasoline with an octane rating of 91 AKI or higher. If premium unleaded gasoline is not available, regular unleaded gasoline with octane rating of 87 AKI or higher may be temporarily used. For optimum engine performance and driveability, it is required that you use premium grade unleaded gasoline.

■ Fuel octane rating

This octane rating is the average of the Research Octane and Motor numbers and is commonly referred to as the Anti Knock Index (AKI). Refer to “Fuel” section in this manual.

Fuel capacity:

15.9 US gal (60 liters, 13.2 Imp gal)

Engine oil:

Use only API classification SM with the words “ENERGY CONSERVING” and the ILSAC certification mark (starburst mark) displayed on the container (ILSAC GF-4).

Engine oil capacity:

4.2 US qt (4.0 liters, 3.5 Imp qt)

Cold tire pressure:

Tire size			P215/60R16 94H	P215/55R17 93H
Wheel size			$16 \times 6^1/_2$ JJ	17×7 JJ
Pressure	Front	Light load	29 psi (200 kPa, 2.0 kgf/cm^2)	32 psi (220 kPa, 2.2 kgf/cm^2)
		Full load	29 psi (200 kPa, 2.0 kgf/cm^2)	32 psi (220 kPa, 2.2 kgf/cm^2)
	Rear	Light load	28 psi (190 kPa, 1.9 kgf/cm^2)	30 psi (210 kPa, 2.1 kgf/cm^2)
		Full load	36 psi (250 kPa, 2.5 kgf/cm^2)	32 psi (220 kPa, 2.2 kgf/cm^2)
		Trailer towing	41 psi (280 kPa, 2.8 kgf/cm^2)	36 psi (250 kPa, 2.5 kgf/cm^2)
Temporary spare tire	Size		T135/80 D16	T135/90 D16
	Pressure		60 psi (420 kPa, 4.2 kgf/cm^2)	